LOW HEADROOM TRACK,
HI-LIFT TRACK,
FOLLOW-THE-ROOF TRACK,
AND VERTICAL LIFT TRACK
ARE AVAILABLE OPTIONS.
3" TRACK ALSO AVAILABLE.

9'-2" WIDE (MAX) X 18'-0" HIGH (MAX)

REVISIONS					
REV. NO.	ZONE:	DATE:	ECN NO.	APPVD:	DESCRIPTION
00	–	11/29/18	--	SH	INITIAL RELEASE.
01	–	8/7/20	–	SH	UPDATED TITLE BLOCK
02	–	4/7/25	ER1432	DH	ADDED 25GA MODELS SEE ER1432
03	–	5/27/25	ER1432R03	DH	ADDED 25GA WOODGRAIN MODELS SEE ER1432R03
04	–	6/5/2025	ER1432R04	DH	ADJUSTED MAX WIDTH TO 9'2"

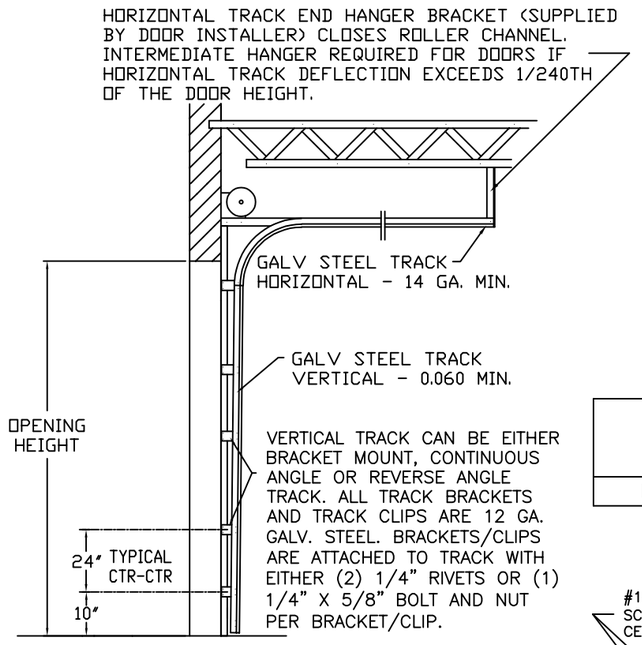

SIDE ELEVATION
STANDARD-LIFT TRACK DETAILS

25GA EXTERIOR SKIN

(RIBBED DOORS)
NON-INSULATED MODELS:
MODELS: CLOPAY – 525, 225
IDEAL – C5ST, C5EST
VINYL BACKED INSULATION MODELS:
MODELS: CLOPAY – 525V
IDEAL – C5SV, C5ESV
STEEL BACKED INSULATED MODELS:
MODELS: CLOPAY – 525S, 225S
IDEAL – C5SS, C5ESS

24GA EXTERIOR SKIN

(RIBBED DOORS)
NON-INSULATED MODELS:
MODELS: CLOPAY – 524, 224
IDEAL – C4ST
VINYL BACKED INSULATION MODELS:
MODELS: CLOPAY – 524V
IDEAL – C4SV
STEEL BACKED INSULATED MODELS:
MODELS: CLOPAY – 524S, 224S
IDEAL – C4SS

DOOR WIDTH	NUMBER OF CENTER STILES
UP TO 9'-2"	1

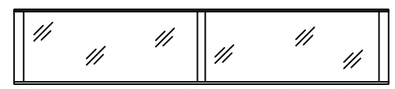

OPTIONAL ALUMINUM FULL VISION LITE SECTIONS AVAILABLE (DSB, 1/8" PLEXI, OR BETTER). FULL VISION SECTIONS DO NOT REQUIRE U-BAR REINFORCEMENT.

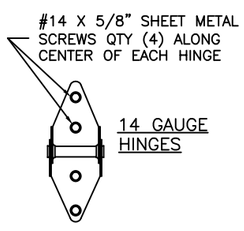

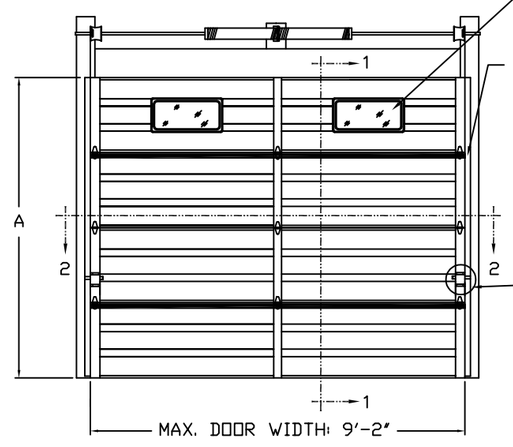

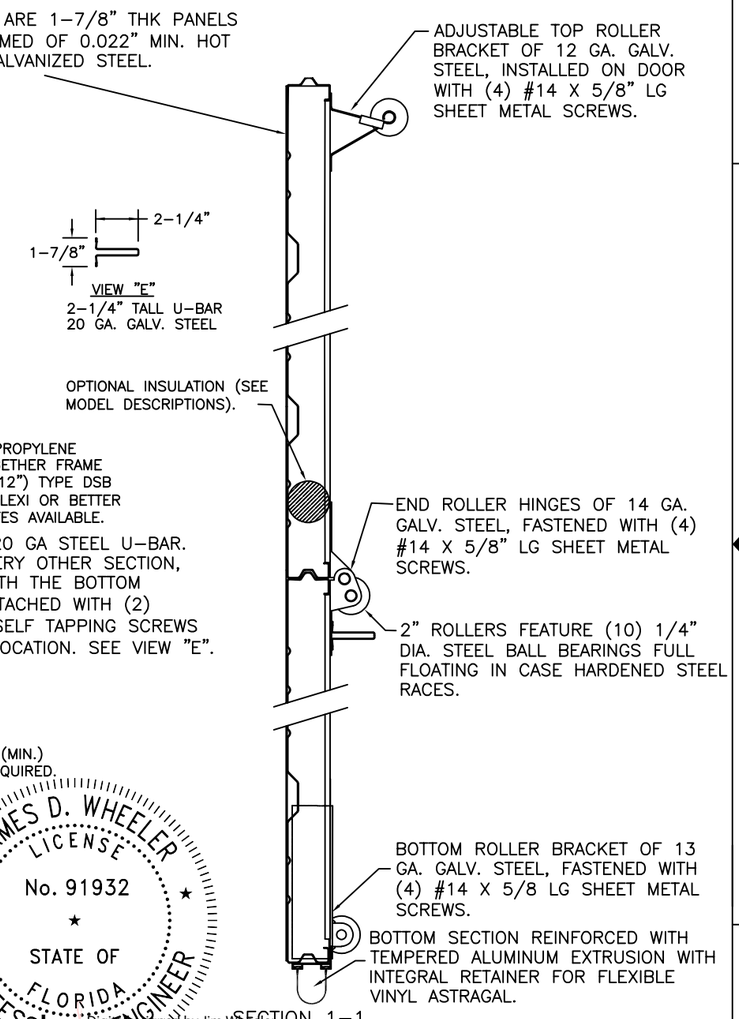

SECTION 1-1

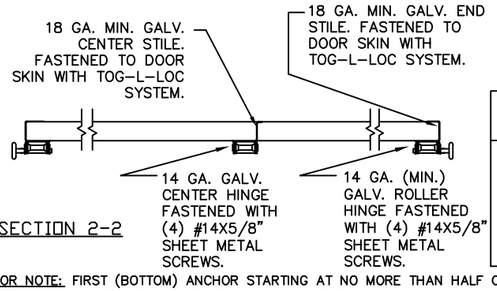

SECTION 2-2

DOOR HEIGHT 'A'	NUMBER OF SECTIONS
8'-0"	4
8'-3" THRU 10'-0"	5
10'-3" THRU 12'-0"	6
12'-3" THRU 14'-0"	7
14'-3" THRU 16'-0"	8
16'-3" THRU 18'-0"	9

ANCHOR NOTE: FIRST (BOTTOM) ANCHOR STARTING AT NO MORE THAN HALF OF THE MAXIMUM ON-CENTER DISTANCE. HIGHEST ANCHOR INSTALLED AT LEAST AS HIGH AS THE DOOR OPENING.

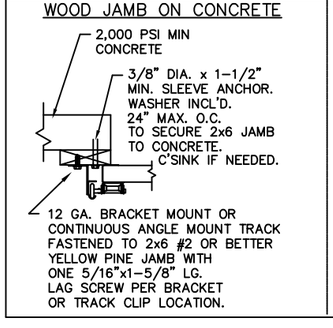

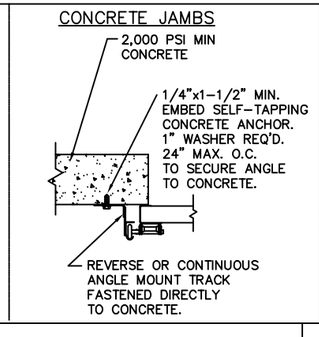

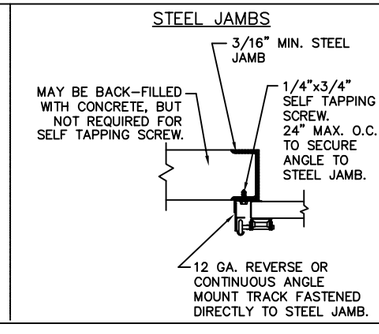

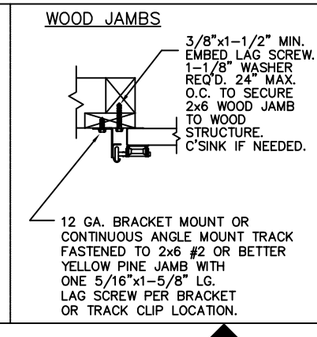

THE DESIGN OF THE SUPPORTING STRUCTURAL ELEMENTS IS THE RESPONSIBILITY OF THE BUILDING ENGINEER OR ARCHITECT OF RECORD.

JAMES D. WHEELER, P.E.
FLORIDA P.E. #91932

JAMES D. WHEELER LICENSE No. 91932 STATE OF FLORIDA PROFESSIONAL ENGINEER

Jim Wheeler
Digitally signed by Jim Wheeler
Date: 2026.08.20 10:35:28 -04'00'

DESIGN LOAD: +18.0 PSF, -20.0 PSF.
TEST LOAD: +27.0 PSF, -30.0 PSF.

MANUFACTURING PRODUCT CODE: MPC: C-PAN-1E448

PART NO.: N/A

CLOPAY WINDLOAD RATING W2-DP18

NOTICE:
Confidential/Proprietary information of CLOPAY BUILDING PRODUCTS CO. is contained herein and may not be disclosed, used, duplicated, made available, or distributed without its prior consent. Failure to observe this notice may result in liability for any damages and losses resulting therefrom.

Third Angle Projection

Unless Stated Otherwise TOLERANCES are
.0 = ±.031
.00 = ±.015
.000 = ±.005
.0000 = ±.001
Degrees = ±1/2°
Unless Stated Otherwise DIMENSIONS ARE IN INCHES.

Clopay CORPORATION
8585 Duke Boulevard
Mason, OH 45040 USA
Tel. No. 513-770-4800
Fax No. 513-770-4853

DESCRIPTION: 524W2, 9'2" WIDE

DRAWN BY: SH	DATE: 11/29/18	SCALE: N/A	DWG. SIZE B
CHECKED BY: SH	DATE: 11/29/18	SHEET 1 OF 1	
DWG. NO.: 105410		REV. NO. 04	

FLORIDA PRODUCT APPROVAL 48404.1