MODELS	24 GA SHORT	27 GA SHORT	27 GA FLUSH	27 GA LONG
CLOPAY	4400, 4401	4300, HDG	4301, HDGF	4310, HDGL
HOLMES	--	66, 66G, 6200	68, 6201	67, 67G, 6203
IDEAL	--	SP200	SF200	SE200

DOOR HEIGHT	# OF SECTIONS	# OF STRUTS
UP TO 7'0"	4	3
7'3" TO 8'0"	5	3
8'3" TO 8'9"	5	4
9'0" TO 10'6"	6	4
10'9" TO 12'3"	7	5
12'6" TO 14'0"	8	6
14'3" TO 15'9"	9	7
16'0"	10	8
MAX SECTION HEIGHT: 21"		

SHEET 1 OF 2

REV	DATE	DESCRIPTION
06	9/2005	ADDED ROLLER OPTION
07	11/30/07	ADDED EXTENDED HEIGHTS AND COMBINED HOLMES AND CLOPAY M/N
08	5/12/07	ADDED MPC INFO AND HDGF, 66G, 67G
09	02/07/11	UPDATED MODEL NUMBERS.
10	01/31/12	REVISED WIND SPEED TABLE FOR ASCE7-10.
11	04/27/12	ADDED IMPACT RESISTANT OPTION.
12	11/10/20	REMOVED WIND SPEED TABLE, UPDATED TITLE BLOCK.

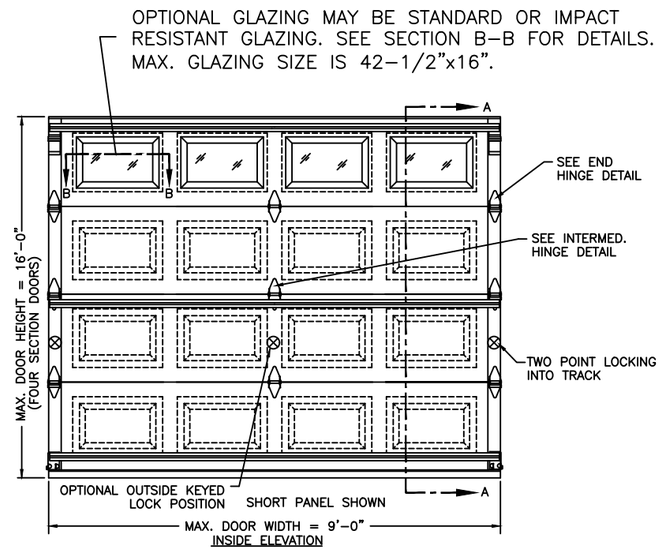

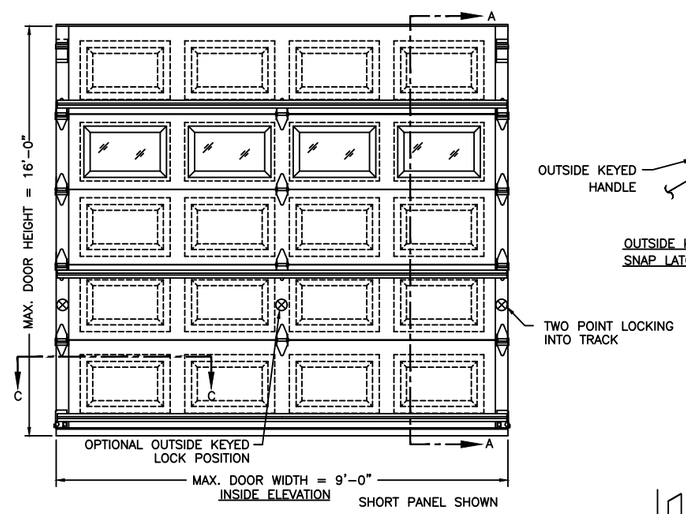

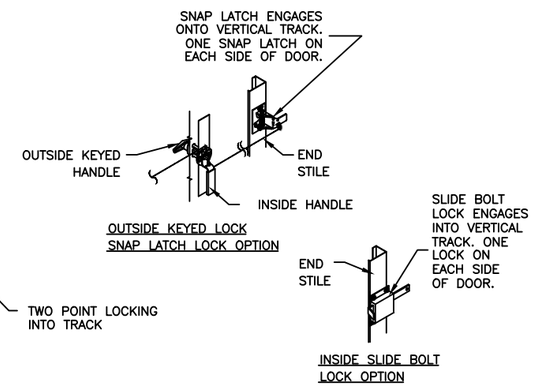

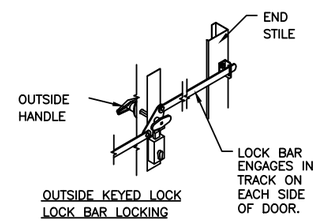

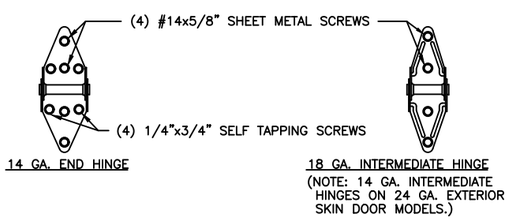

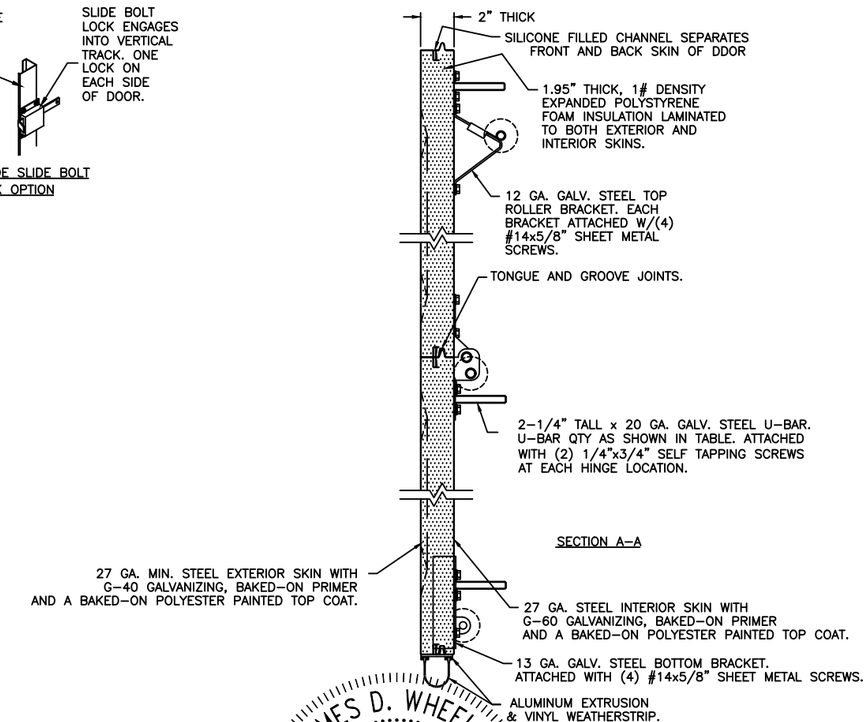

SEE SHEET TWO FOR
IMPACT RESISTANT CONSTRUCTION DETAIL "A"
AND STANDARD CONSTRUCT DETAIL "B";
TRACK AND JAMB DETAILS.

JAMES D. WHEELER LICENSE No. 91932 STATE OF FLORIDA PROFESSIONAL ENGINEER

Jim Wheeler Digitally signed by Jim Wheeler Date: 2024.08.19 10:30:41 -04'00'

DESIGN ENGINEER:
JAMES D. WHEELER, P.E.
FLORIDA LICENSE No. 91932

DESIGN LOADS: +28.0 P.S.F. & -29.0 P.S.F.
TEST LOADS: +42.0 P.S.F. & -43.5 P.S.F.

Clopay Building Products Company

CLOPAY BUILDING PRODUCTS COMPANY
8585 DUKE BLVD.
MASON, OH 45040
(513) 770 - 4800

MANUFACTURING PRODUCT CODE: MPC: DSIE-1F171	WINDLOAD RATING: W4	MAXIMUM DOOR SIZE: 9'0"W X 16'0"H	
DATE: 7/12/96	DESCRIPTION: M/N 4300/4400: +28/-29 PSF		
DRAWN BY: MWW	B	DRAWING NUMBER: 101652 - B	
CHECKED BY:			

FLORIDA PRODUCT APPROVAL 48386.10

MODELS	24 GA SHORT	27 GA SHORT	27 GA FLUSH	27 GA LONG
CLOPAY	4400, 4401	4300, HDG	4301, HDGF	4310, HDGL
HOLMES	--	66, 66G, 6200	68, 6201	67, 67G, 6203
IDEAL	--	SP200	SF200	SE200

REV	DATE	DESCRIPTION
12	---	SEE REVISION HISTORY ON SHEET ONE.

VERTICAL JAMB ATTACHMENT (WOOD FRAME BUILDINGS):
1/2"x3" LAG SCREWS ON 24" CENTERS. 1" O.D. WASHER REQUIRED. LAG SCREWS MAY BE COUNTERSUNK (BUT NOT REQUIRED) TO PROVIDE A FLUSH MOUNTING SURFACE. HORIZONTAL JAMBS DO NOT TRANSFER LOAD.

PREPARATION OF JAMBS BY OTHERS.

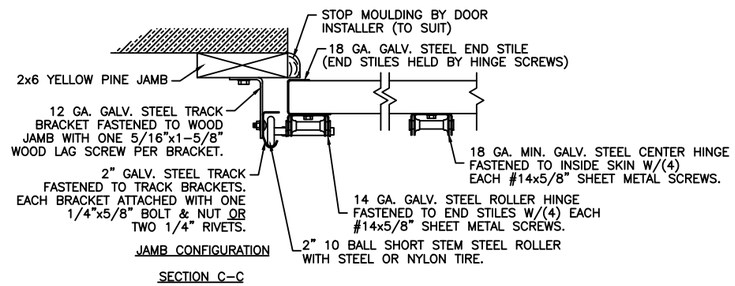

JAMB CONFIGURATION

SECTION C-C

VERTICAL JAMB ATTACHMENT (C-90 BLOCK OR 2000 PSI MIN. CONCRETE COLUMN):
3/8"X4" SLEEVE ANCHORS ON 24" CENTERS (BOTH C-90 BLOCK OR 2000 PSI MIN. CONCRETE) OR 1/4"X4" TAPCON SCREWS ON 24" CENTERS (2000 PSI MIN. CONCRETE). WASHERS INCLUDED WITH SLEEVE ANCHORS. 1" O.D. WASHERS REQUIRED WITH TAPCONS. ANCHORS MAY BE COUNTERSUNK (BUT NOT REQUIRED) TO PROVIDE A FLUSH MOUNTING SURFACE. HORIZONTAL JAMBS DO NOT TRANSFER LOAD.

NOTE: THE DESIGN OF THE SUPPORTING STRUCTURAL ELEMENTS SHALL BE THE RESPONSIBILITY OF THE PROFESSIONAL OF RECORD FOR THE BUILDING OR STRUCTURE AND IN ACCORDANCE WITH CURRENT BUILDING CODES FOR THE LOADS LISTED ON THE DRAWING.

NOTE: TRACK CONFIGURATION ABOVE THE DOOR OPENING DOES NOT AFFECT THE WIND LOAD RATING OF THIS DOOR.

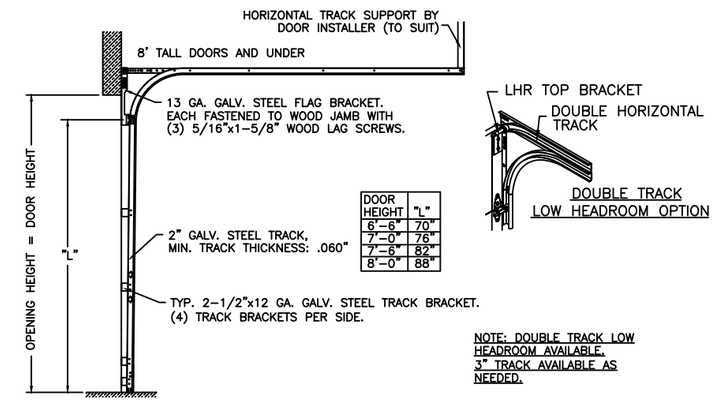

DOOR HEIGHT	"L"
6'-6"	70"
7'-0"	76"
7'-6"	82"
8'-0"	88"

NOTE: DOUBLE TRACK LOW HEADROOM AVAILABLE. 3" TRACK AVAILABLE AS NEEDED.

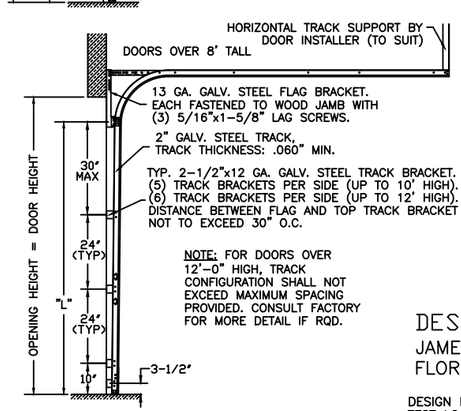

NOTE: FOR DOORS OVER 12'-0" HIGH, TRACK CONFIGURATION SHALL NOT EXCEED MAXIMUM SPACING PROVIDED. CONSULT FACTORY FOR MORE DETAIL IF RQD.

DOOR HEIGHT	"L"
8'6"	94"
9'0"	100"
9'6"	106"
10'0"	112"
10'6"	118"
11'0"	124"
11'6"	130"
12'0"	136"
12'6"	142"
13'0"	148"
13'6"	154"
14'0"	160"
14'6"	166"
15'0"	172"
15'6"	178"
16'0"	184"

DESIGN ENGINEER:
JAMES D. WHEELER, P.E.
FLORIDA LICENSE No. 91932

DESIGN LOADS: +28.0 P.S.F. & -29.0 P.S.F.
TEST LOADS: +42.0 P.S.F. & -43.5 P.S.F.

STANDARD ASSEMBLY DETAILS
DRAWING 101652-B

SECTION B-B (NON-IMPACT RESISTANT GLAZING OPTION)

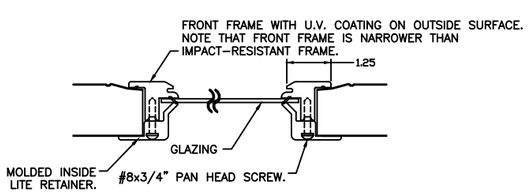

STANDARD ASSEMBLY CONSTRUCTION:
OPTIONAL SSB, DSB OR 1/8" ACYRLIC LITES AVAILABLE. OPTIONAL ACRYLIC GLAZING IS PLASKOLITE OPTIX OR LUCITE CP APPROVED CC2 PLASTIC IN ACCORDANCE WITH IBC/FBC 2606.
THE ENTIRE DOOR ASSEMBLY INSTALLED IN COMPLIANCE WITH THIS SECTION MEETS THE WIND LOAD REQUIREMENTS OF THE FLORIDA BUILDING CODE OR INTERNATIONAL BUILDING CODE BUT DOES NOT MEET THE IMPACT RESISTANT REQUIREMENT FOR WINDBORNE DEBRIS REGIONS (REF. CHAPTER 16 FBC/IBC).

Clopay Corporation
CLOPAY CORPORATION
8585 DUKE BLVD.
MASON, OH 45040
(513) 770 - 4800

MANUFACTURING PRODUCT CODE: MPC: DSIE-1F171	WINDLOAD RATING: W4	MAXIMUM DOOR SIZE: 9'0"W X 16'0"H	
DATE: 7/12/96	DESCRIPTION: M/N 4300/4400: +28/-29 PSF		
DRAWN BY: MWW			
CHECKED BY:	B	DRAWING NUMBER: 101652 - B	

FLORIDA PRODUCT APPROVAL 48386.10