MODELS	24 GA SHORT	27 GA SHORT	27 GA FLUSH	27 GA LONG
CLOPAY	4400, 4401	4300, HDG	4301, HDGF	4310, HDGL
HOLMES	--	66, 66G, 6200	68, 6201	67, 67G, 6203
IDEAL	--	SP200	SF200	SE200

SHEET: 1 OF 4

REVISIONS

REV. NO.	ZONE:	DATE:	ECN NO.	APPVD:	DESCRIPTION
20	–	6/2/17	–	SH	CORRECTED LAG SCREW CALL-OUT S4-C2.
21	–	1/30/20	EN2736	SH	REVISED MAX WINDOW SIZE AND TITLE BLOCK
22	–	11/16/20	–	SH	REMOVED WIND CHART.

DOOR HEIGHT	# OF SECTIONS	# OF U-BARS
UP TO 7'0"	4	5
7'3" TO 8'9"	5	6
9'0" TO 10'6"	6	7
10'9" TO 12'3"	7	8
12'6" TO 14'0"	8	9
14'3" TO 15'9"	9	10
16'0"	10	11
MAX SECTION HEIGHT: 21"		

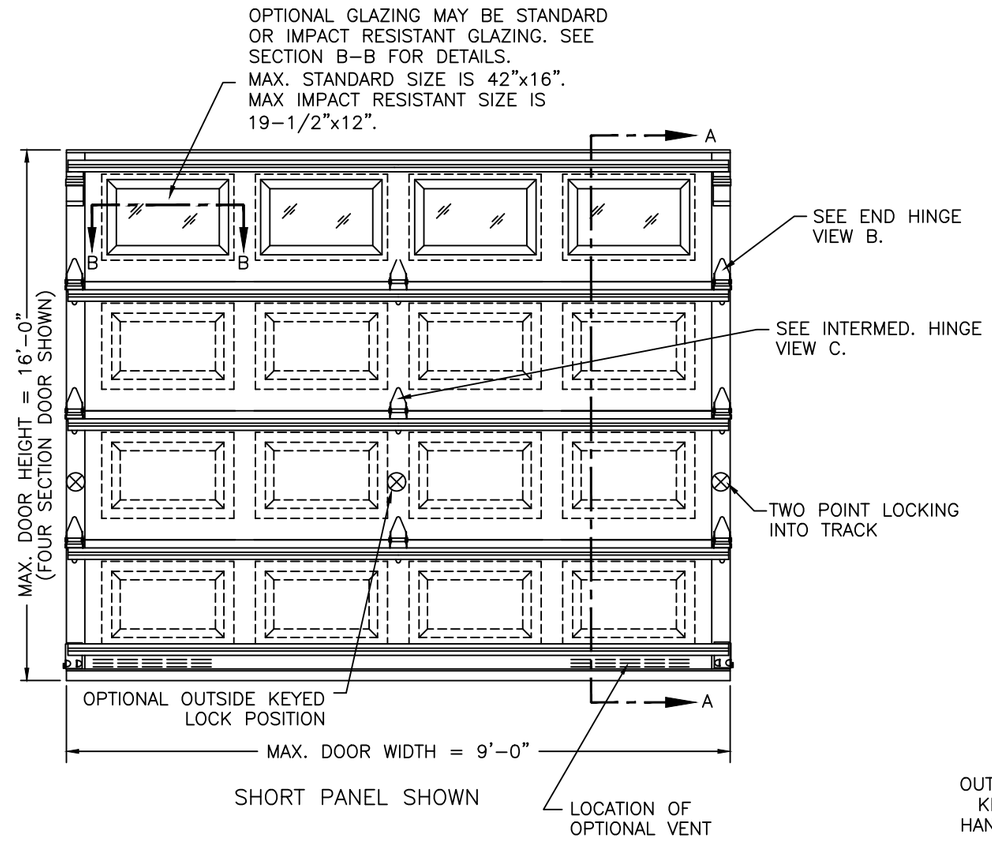

SHORT PANEL SHOWN

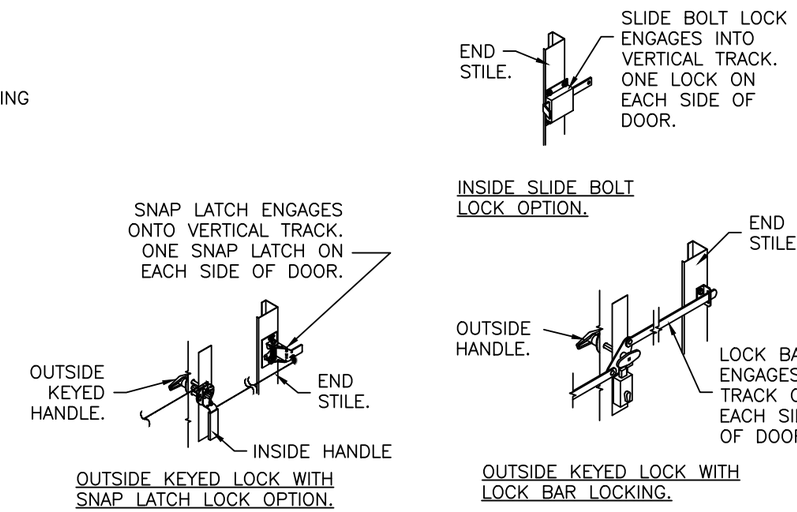

Jim Wheeler Digitally signed by Jim Wheeler Date: 2024.08.19 10:58:24 -04'00'

JAMES D. WHEELER LICENSE No. 91932 STATE OF FLORIDA PROFESSIONAL ENGINEER

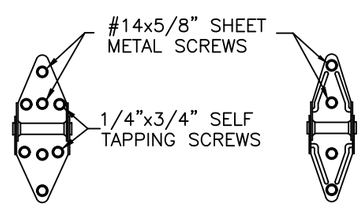

14 GA. END HINGES VIEW "B"

18 GA. INTERMEDIATE HINGE VIEW "C"

DESIGN ENGINEER:
JAMES D. WHEELER, P.E.
FLORIDA LICENSE No. 91932

DESIGN LOADS: +38.0 P.S.F. & –44.0 P.S.F.
TEST LOADS: +57.0 P.S.F. & –66.0 P.S.F.

Unless Stated Otherwise TOLERANCES are
.0 = ±.031
.00 = ±.015
.000 = ±.005
.0000 = ±.001
Degrees = ±1/2°
Unless Stated Otherwise DIMENSIONS ARE IN INCHES.

Clopay CORPORATION
8585 Duke Boulevard
Mason, OH 45040 USA
Tel. No. 513-770-4800
Fax No. 513-770-4853

MANUFACTURING PRODUCT CODE: DSIE-1F171
PART NO.: N/A
WINDLOAD RATING: W6 DP38

DESCRIPTION: CLASSIC 2" EPS SINGLE CAR +38/–44 PSF

DRAWN BY: MW	DATE: 9/7/95	SCALE: NTS	DWG. SIZE B
CHECKED BY: --	DATE: --	SHEET 1 OF 4	
DWG. NO.: 101526 – B		VER: IBC	

FLORIDA PRODUCT APPROVAL 48386.17

MODELS	24 GA SHORT	27 GA SHORT	27 GA FLUSH	27 GA LONG
CLOPAY	4400, 4401	4300, HDG	4301, HDGF	4310, HDGL
HOLMES	--	66, 66G, 6200	68, 6201	67, 67G, 6203
IDEAL	--	SP200	SF200	SE200

SHEET: 2 OF 4

REVISIONS					
REV. NO.	ZONE:	DATE:	ECN NO.	APPVD:	DESCRIPTION
22	–	–	–	–	SEE REVISION HISTORY ON SHEET ONE.

STANDARD ASSEMBLY CONSTRUCTION:

OPTIONAL DSB OR 1/8" ACYRLIC LITES AVAILABLE. OPTIONAL ACRYLIC GLAZING IS PLASKOLITE OPTIX OR LUCITE CP APPROVED CC2 PLASTIC IN ACCORDANCE WITH IBC/FBC 2606.

THE ENTIRE DOOR ASSEMBLY INSTALLED IN COMPLIANCE WITH THIS SECTION MEETS THE WIND LOAD REQUIREMENTS OF THE FLORIDA BUILDING CODE OR INTERNATIONAL BUILDING CODE BUT DOES NOT MEET THE IMPACT RESISTANT REQUIREMENT FOR WINDBORNE DEBRIS REGIONS (REF. CHAPTER 16 FBC/IBC).

SECTION B–B (NON–IMPACT RESISTANT GLAZING OPTION)

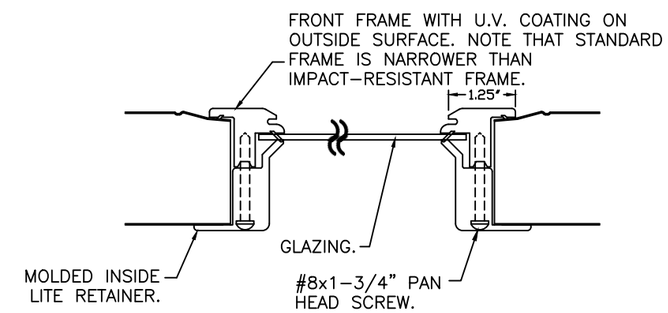

STANDARD ASSEMBLY DETAILS
DRAWING 101526-B

DESIGN ENGINEER:
JAMES D. WHEELER, P.E.
FLORIDA LICENSE No. 91932

DESIGN LOADS: +38.0 P.S.F. & –44.0 P.S.F.
TEST LOADS: +57.0 P.S.F. & –66.0 P.S.F.

MANUFACTURING PRODUCT CODE: DSIE-1F171

PART NO.: N/A

Unless Stated Otherwise TOLERANCES are
.0 = ±.031
.00 = ±.015
.000 = ±.005
.0000 = ±.001
Degrees = ±1/2°
Unless Stated Otherwise DIMENSIONS ARE IN INCHES.

Clopay CORPORATION
8585 Duke Boulevard
Mason, OH 45040 USA
Tel. No. 513-770-4800
Fax No. 513-770-4853

WINDLOAD RATING: W6 DP38

DESCRIPTION: CLASSIC 2" EPS SINGLE CAR +38/–44 PSF

DRAWN BY: MW	DATE: 9/7/95	SCALE: NTS	DWG. SIZE B
CHECKED BY: --	DATE: --	SHEET 2 OF 4	
DWG. NO.: 101526 – B		VER: IBC	

FLORIDA PRODUCT APPROVAL 48386.17

MODELS	24 GA SHORT	27 GA SHORT	27 GA FLUSH	27 GA LONG
CLOPAY	4400, 4401	4300, HDG	4301, HDGF	4310, HDGL
HOLMES	--	66, 66G, 6200	68, 6201	67, 67G, 6203
IDEAL	--	SP200	SF200	SE200

SHEET: 3 OF 4

REVISIONS					
REV. NO.	ZONE:	DATE:	ECN NO.	APPVD:	DESCRIPTION
22	–	–	–	–	SEE REVISION HISTORY ON SHEET ONE.

VERTICAL JAMB ATTACHMENT (WOOD FRAME BUILDINGS):
3/8"x3" LAG SCREWS ON 24" CENTERS. 1-1/8" O.D. WASHER REQUIRED. LAG SCREWS MAY BE COUNTERSUNK (BUT NOT REQUIRED) TO PROVIDE A FLUSH MOUNTING SURFACE. HORIZONTAL JAMBS DO NOT TRANSFER LOAD.

VERTICAL JAMB ATTACHMENT (C-90 BLOCK OR 2,000 PSI MIN. CONCRETE COLUMN):
3/8"x3" SLEEVE ANCHOR BOLTS ON 22" CENTERS (2,000 PSI MIN. CONCRETE). WASHERS INCLUDED WITH SLEEVE ANCHORS.
OR
1/4"x3" TAPCON SCREWS ON 19" CENTERS (2,000 PSI MIN. CONCRETE) OR 10" CENTERS (C-90 BLOCK). 1" O.D. WASHERS REQUIRED WITH TAPCONS.
ANCHORS MAY BE COUNTERSUNK (BUT NOT REQUIRED) TO PROVIDE A FLUSH MOUNTING SURFACE. HORIZONTAL JAMBS DO NOT TRANSFER LOAD.

OTHER JAMB CONFIGURATIONS: REFER TO DASMA TDS-161. A LICENSED DESIGN PROFESSIONAL MAY ALSO BE EMPLOYED TO APPROVE ALTERNATE FASTENERS AND/OR JAMB CONFIGURATIONS.

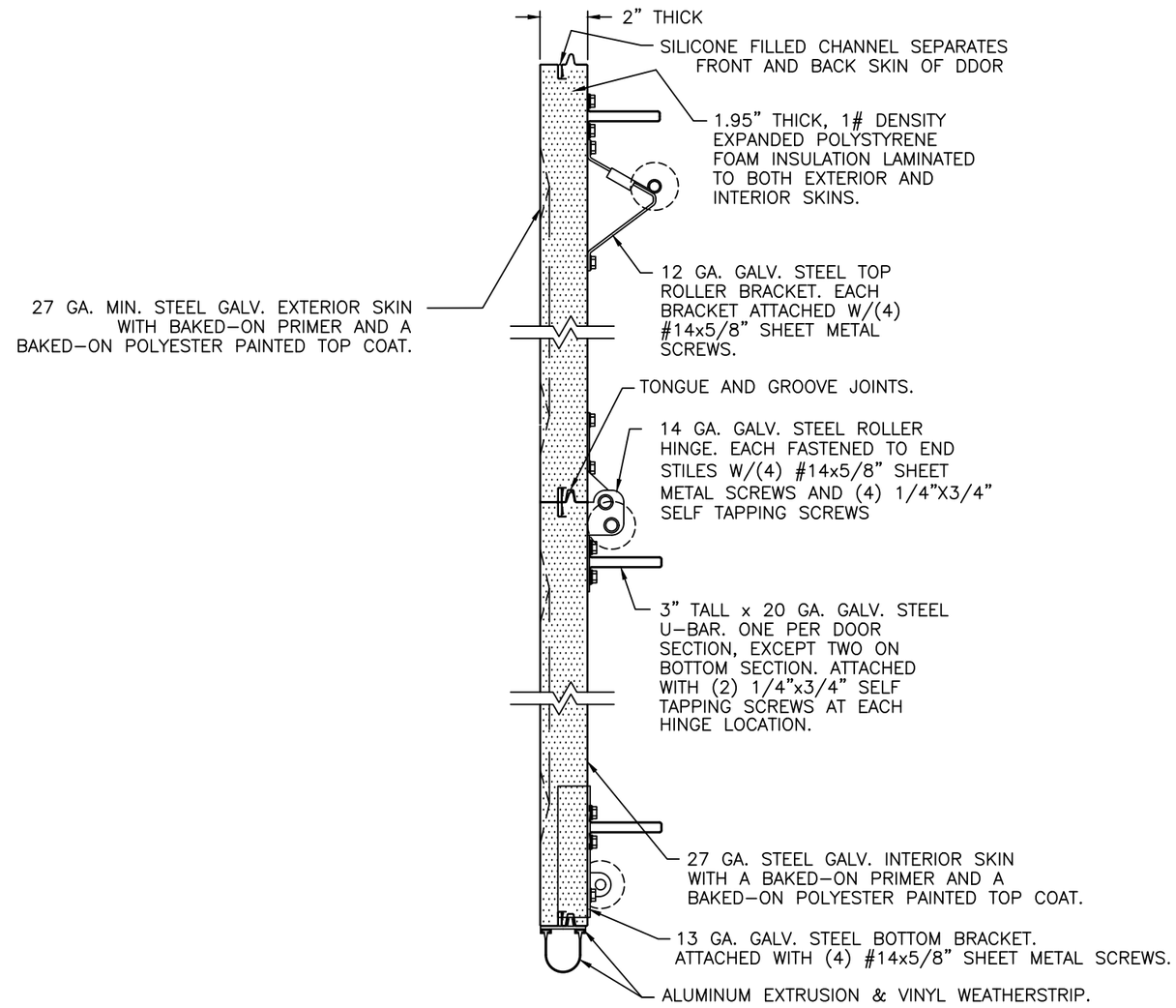

SECTION A-A (SIDE VIEW)

DESIGN ENGINEER:
JAMES D. WHEELER, P.E.
FLORIDA LICENSE No. 91932

DESIGN LOADS: +38.0 P.S.F. & -44.0 P.S.F.
TEST LOADS: +57.0 P.S.F. & -66.0 P.S.F.

Unless Stated Otherwise TOLERANCES are
.0 = ±.031
.00 = ±.015
.000 = ±.005
.0000 = ±.001
Degrees = ±1/2°
Unless Stated Otherwise DIMENSIONS ARE IN INCHES.

Clopay CORPORATION
8585 Duke Boulevard
Mason, OH 45040 USA
Tel. No. 513-770-4800
Fax No. 513-770-4853

MANUFACTURING PRODUCT CODE DSIE-1F171			
PART NO.: N/A			
WINDLOAD RATING W6 DP38			
DESCRIPTION: CLASSIC 2" EPS SINGLE CAR +38/-44 PSF			
DRAWN BY: MW	DATE: 9/7/95	SCALE: NTS	DWG. SIZE B
CHECKED BY: --	DATE: --	SHEET 3 OF 4	
DWG. NO.: 101526 - B		VER: IBC	

FLORIDA PRODUCT APPROVAL 48386.17

MODELS	24 GA SHORT	27 GA SHORT	27 GA FLUSH	27 GA LONG
CLOPAY	4400, 4401	4300, HDG	4301, HDGF	4310, HDGL
HOLMES	--	66, 66G, 6200	68, 6201	67, 67G, 6203
IDEAL	--	SP200	SF200	SE200

SHEET: 4 OF 4

REVISIONS					
REV. NO.	ZONE:	DATE:	ECN NO.	APPVD:	DESCRIPTION
22	–	–	–	–	SEE REVISION HISTORY ON SHEET ONE.

2" TRACK CONFIGURATION.

NOTE: TRACK CONFIGURATION ABOVE THE DOOR OPENING DOES NOT AFFECT THE WIND LOAD RATING OF THIS DOOR.

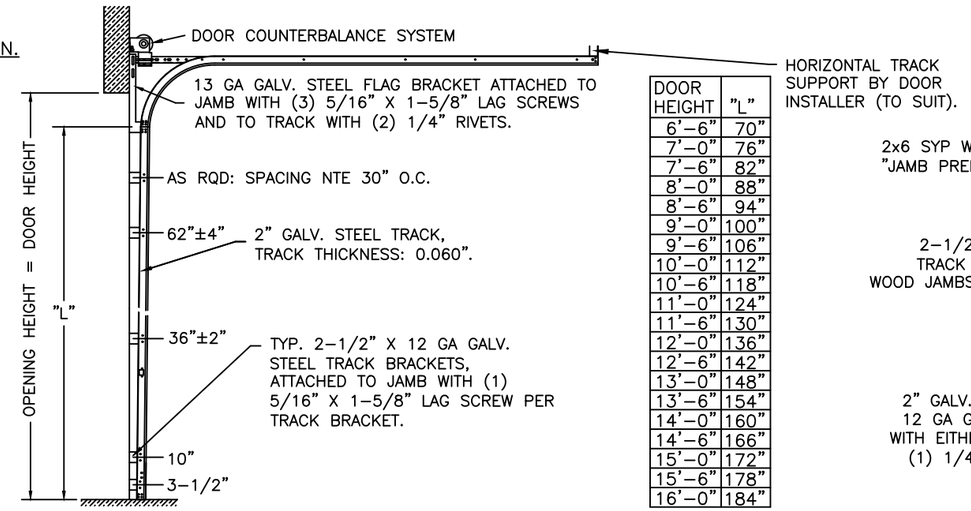

DOOR HEIGHT	"L"
6'-6"	70"
7'-0"	76"
7'-6"	82"
8'-0"	88"
8'-6"	94"
9'-0"	100"
9'-6"	106"
10'-0"	112"
10'-6"	118"
11'-0"	124"
11'-6"	130"
12'-0"	136"
12'-6"	142"
13'-0"	148"
13'-6"	154"
14'-0"	160"
14'-6"	166"
15'-0"	172"
15'-6"	178"
16'-0"	184"

3" TRACK IS ALSO AVAILABLE.

JAMB CONFIGURATION.

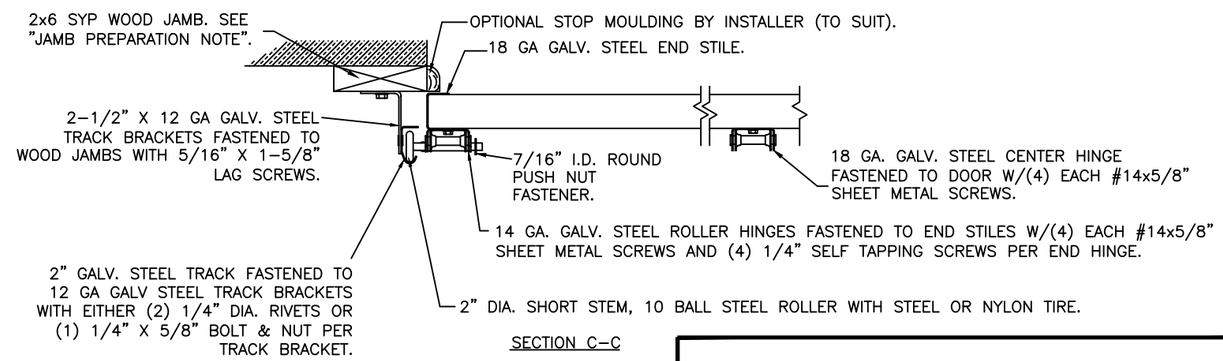

SECTION C-C

PREPARATION OF JAMBS BY OTHERS.

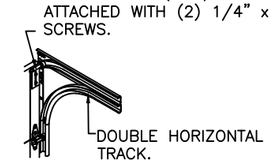

DOUBLE TRACK LOW HEADROOM OPTION

DESIGN ENGINEER:
JAMES D. WHEELER, P.E.
FLORIDA LICENSE No. 91932

DESIGN LOADS: +38.0 P.S.F. & -44.0 P.S.F.
TEST LOADS: +57.0 P.S.F. & -66.0 P.S.F.

Unless Stated Otherwise TOLERANCES are
.0 = ±.031
.00 = ±.015
.000 = ±.005
.0000 = ±.001
Degrees = ±1/2°
Unless Stated Otherwise DIMENSIONS ARE IN INCHES.

Clopay CORPORATION
8585 Duke Boulevard
Mason, OH 45040 USA
Tel. No. 513-770-4800
Fax No. 513-770-4853

MANUFACTURING PRODUCT CODE: DSIE-1F171
PART NO.: N/A
WINDLOAD RATING: W6 DP38

DESCRIPTION: CLASSIC 2" EPS SINGLE CAR +38/-44 PSF

DRAWN BY: MW	DATE: 9/7/95	SCALE: NTS	DWG. SIZE B
CHECKED BY: --	DATE: --	SHEET 4 OF 4	
DWG. NO.: 101526 - B		VER: IBC	

FLORIDA PRODUCT APPROVAL 48386.17