| MODELS | 24 GA SHORT | 27 GA SHORT | 27 GA FLUSH | 27 GA LONG |
|---|---|---|---|---|
| CLOPAY | 4400, 4401 | 4300, HDG | 4301, HDGF | 4310, HDGL |
| HOLMES | -- | 66, 66G, 6200 | 68, 6201 | 67, 67G, 6203 |
| IDEAL | -- | SP200 | SF200 | SE200 |

SHEET: 1 OF 4

REVISIONS

| REV. NO. | ZONE: | DATE: | ECN NO. | APPVD: | DESCRIPTION |
|---|---|---|---|---|---|
| 20 | – | 6/2/17 | – | SH | CORRECTED LAG SCREW CALL-OUT S4-C2. |
| 21 | – | 1/30/20 | EN2736 | SH | REVISED MAX WINDOW SIZE AND TITLE BLOCK |
| 22 | – | 11/16/20 | – | SH | REMOVED WIND CHART. |

| DOOR HEIGHT | # OF SECTIONS | # OF U-BARS |
|---|---|---|
| UP TO 7'0" | 4 | 5 |
| 7'3" TO 8'9" | 5 | 6 |
| 9'0" TO 10'6" | 6 | 7 |
| 10'9" TO 12'3" | 7 | 8 |
| 12'6" TO 14'0" | 8 | 9 |
| 14'3" TO 15'9" | 9 | 10 |
| 16'0" | 10 | 11 |
| MAX SECTION HEIGHT: 21" | | |

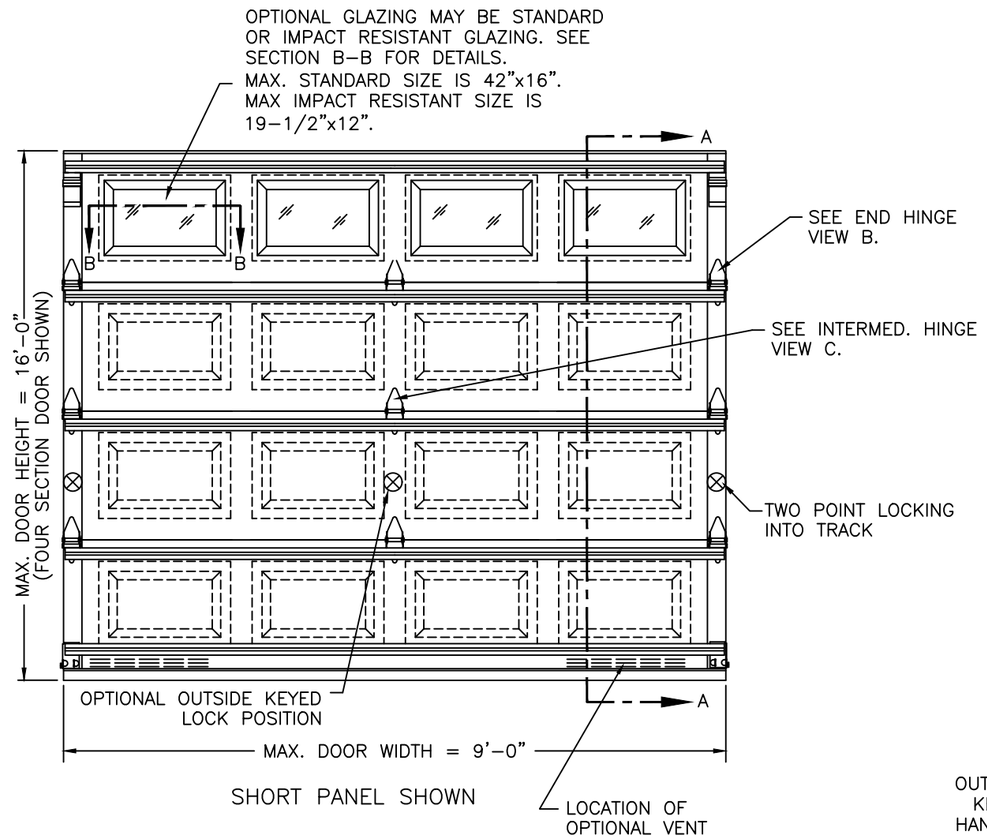


SHORT PANEL SHOWN

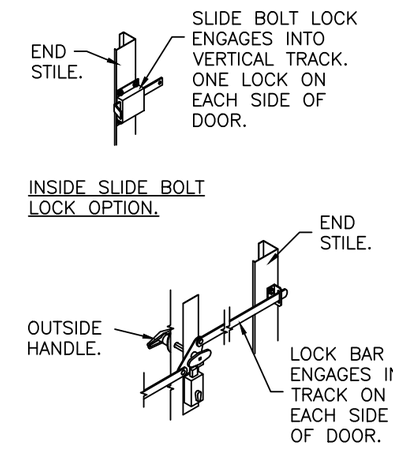


OUTSIDE KEYED LOCK WITH SNAP LATCH LOCK OPTION.

OUTSIDE KEYED LOCK WITH LOCK BAR LOCKING.

Jim Wheeler Digitally signed by Jim Wheeler Date: 2026.08.19 10:59:31 -04'00'

JAMES D. WHEELER LICENSE No. 91932 STATE OF FLORIDA PROFESSIONAL ENGINEER

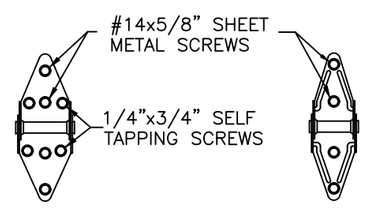


14 GA. END HINGES VIEW "B"

18 GA. INTERMEDIATE HINGE VIEW "C"

DESIGN ENGINEER:
JAMES D. WHEELER, P.E.
FLORIDA LICENSE No. 91932

DESIGN LOADS: +38.0 P.S.F. & –44.0 P.S.F.
TEST LOADS: +57.0 P.S.F. & –66.0 P.S.F.

Unless Stated Otherwise TOLERANCES are
.0 = ±.031
.00 = ±.015
.000 = ±.005
.0000 = ±.001
Degrees = ±1/2°
Unless Stated Otherwise DIMENSIONS ARE IN INCHES.

Clopay CORPORATION
8585 Duke Boulevard
Mason, OH 45040 USA
Tel. No. 513-770-4800
Fax No. 513-770-4853

MANUFACTURING PRODUCT CODE: DSIE-1F171

PART NO.: N/A

WINDLOAD RATING: W6 DP38

DESCRIPTION: CLASSIC 2" EPS SINGLE CAR +38/–44 PSF

| | | | |
|---|---|---|---|
| DRAWN BY: MW | DATE: 9/7/95 | SCALE: NTS | DWG. SIZE B |
| CHECKED BY: -- | DATE: -- | SHEET 1 OF 4 | |
| DWG. NO.: 101526 – A | | VER: FPA | |

FLORIDA PRODUCT APPROVAL 48386.18

| MODELS | 24 GA SHORT | 27 GA SHORT | 27 GA FLUSH | 27 GA LONG |
|---|---|---|---|---|
| CLOPAY | 4400, 4401 | 4300, HDG | 4301, HDGF | 4310, HDGL |
| HOLMES | -- | 66, 66G, 6200 | 68, 6201 | 67, 67G, 6203 |
| IDEAL | -- | SP200 | SF200 | SE200 |

SHEET: 2 OF 4

| REVISIONS | | | | | |
|---|---|---|---|---|---|
| REV. NO. | ZONE: | DATE: | ECN NO. | APPVD: | DESCRIPTION |
| 22 | – | – | – | – | SEE REVISION HISTORY ON SHEET ONE. |

IMPACT–RESISTANT CONSTRUCTION:
SOLID DOORS (NO GLAZING) OR DOORS WITH OPTIONAL IMPACT–RESISTANT GLAZING ARE IMPACT–RESISTANT. OPTIONAL MAX WINDOW SIZE 19–1/2"x12" INJECTION–MOLDED POLYCARBONATE FRONT FRAME AND GLAZING IS GE LEXAN SLX2432T, AN APPROVED CC2 PLASTIC IN ACCORDANCE WITH IBC/FBC 2606 AND AN APPROVED C1 PLASTIC IN ACCORDANCE WITH FBC 2612.
THE ENTIRE DOOR ASSEMBLY INSTALLED IN COMPLIANCE WITH THIS SECTION MEETS THE WIND LOAD REQUIREMENTS OF THE FLORIDA BUILDING CODE AND INTERNATIONAL BUILDING CODE AND IS LARGE– AND SMALL–MISSILE IMPACT RESISTANT.

SECTION B–B (IMPACT–RESISTANT GLAZING OPTION)

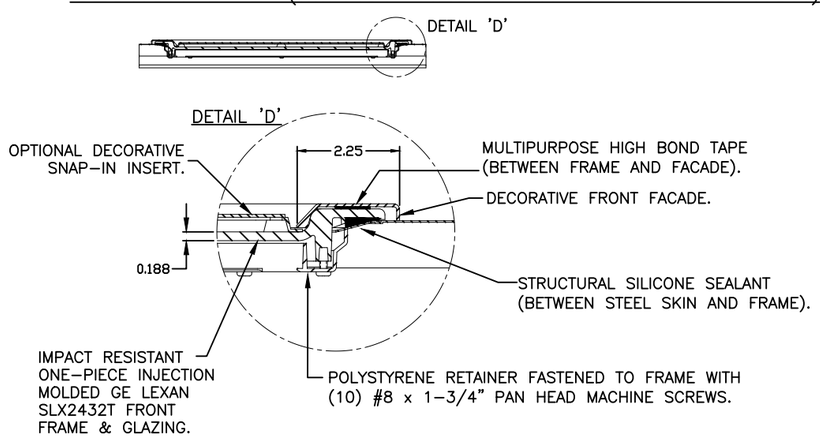


IMPACT–RESISTANT ASSEMBLY DETAILS
**DRAWING 101526-A**

DESIGN ENGINEER:
JAMES D. WHEELER, P.E.
FLORIDA LICENSE No. 91932

DESIGN LOADS: +38.0 P.S.F. & –44.0 P.S.F.
TEST LOADS: +57.0 P.S.F. & –66.0 P.S.F.

MANUFACTURING PRODUCT CODE: DSIE–1F171
PART NO.: N/A

Unless Stated Otherwise TOLERANCES are
.0 = ±.031
.00 = ±.015
.000 = ±.005
.0000 = ±.001
Degrees = ±1/2°
Unless Stated Otherwise DIMENSIONS ARE IN INCHES.

Clopay CORPORATION
8585 Duke Boulevard
Mason, OH 45040 USA
Tel. No. 513–770–4800
Fax No. 513–770–4853

WINDLOAD RATING: W6 DP38

| | | | |
|---|---|---|---|
| DESCRIPTION: CLASSIC 2" EPS SINGLE CAR +38/–44 PSF | | | |
| DRAWN BY: MW | DATE: 9/7/95 | SCALE: NTS | DWG. SIZE B |
| CHECKED BY: -- | DATE: -- | SHEET 2 OF 4 | |
| DWG. NO.: 101526 – A | | VER: FPA | |

FLORIDA PRODUCT APPROVAL 48386.18

| MODELS | 24 GA SHORT | 27 GA SHORT | 27 GA FLUSH | 27 GA LONG |
|---|---|---|---|---|
| CLOPAY | 4400, 4401 | 4300, HDG | 4301, HDGF | 4310, HDGL |
| HOLMES | -- | 66, 66G, 6200 | 68, 6201 | 67, 67G, 6203 |
| IDEAL | -- | SP200 | SF200 | SE200 |

SHEET: 3 OF 4

| REVISIONS | | | | | |
|---|---|---|---|---|---|
| REV. NO. | ZONE: | DATE: | ECN NO. | APPVD: | DESCRIPTION |
| 22 | – | – | – | – | SEE REVISION HISTORY ON SHEET ONE. |

VERTICAL JAMB ATTACHMENT (WOOD FRAME BUILDINGS):
3/8"x3" LAG SCREWS ON 24" CENTERS. 1–1/8" O.D. WASHER REQUIRED. LAG SCREWS MAY BE COUNTERSUNK (BUT NOT REQUIRED) TO PROVIDE A FLUSH MOUNTING SURFACE. HORIZONTAL JAMBS DO NOT TRANSFER LOAD.

VERTICAL JAMB ATTACHMENT (C–90 BLOCK OR 2,000 PSI MIN. CONCRETE COLUMN):
3/8"x3" SLEEVE ANCHOR BOLTS ON 22" CENTERS (2,000 PSI MIN. CONCRETE). WASHERS INCLUDED WITH SLEEVE ANCHORS.
OR
1/4"x3" TAPCON SCREWS ON 19" CENTERS (2,000 PSI MIN. CONCRETE) OR 10" CENTERS (C–90 BLOCK). 1" O.D. WASHERS REQUIRED WITH TAPCONS.
ANCHORS MAY BE COUNTERSUNK (BUT NOT REQUIRED) TO PROVIDE A FLUSH MOUNTING SURFACE. HORIZONTAL JAMBS DO NOT TRANSFER LOAD.

OTHER JAMB CONFIGURATIONS: REFER TO DASMA TDS–161. A LICENSED DESIGN PROFESSIONAL MAY ALSO BE EMPLOYED TO APPROVE ALTERNATE FASTENERS AND/OR JAMB CONFIGURATIONS.

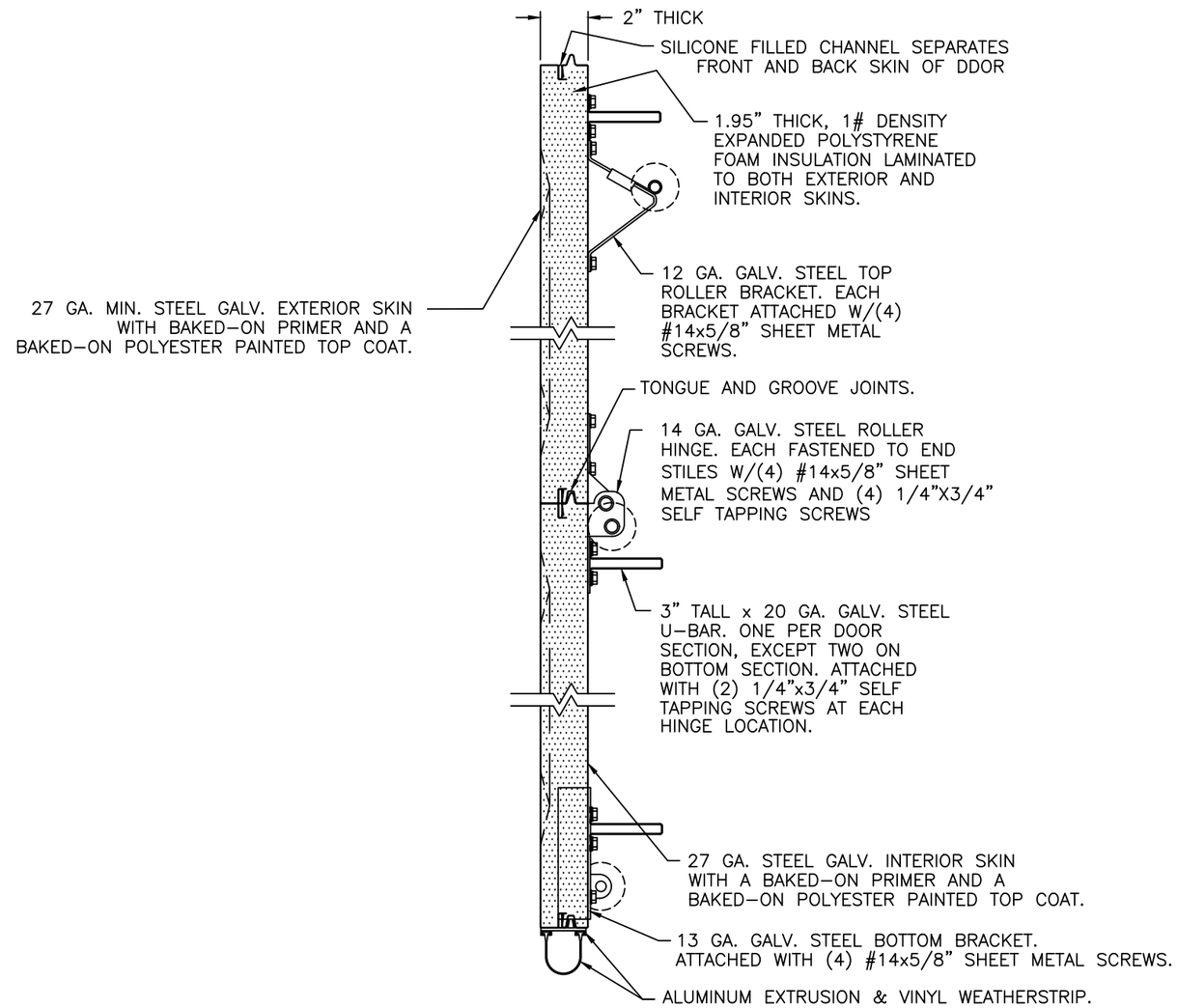


SECTION A–A (SIDE VIEW)

DESIGN ENGINEER:
JAMES D. WHEELER, P.E.
FLORIDA LICENSE No. 91932

DESIGN LOADS: +38.0 P.S.F. & –44.0 P.S.F.
TEST LOADS: +57.0 P.S.F. & –66.0 P.S.F.

MANUFACTURING PRODUCT CODE: DSIE-1F171

PART NO.: N/A

WINDLOAD RATING: W6 DP38

Unless Stated Otherwise TOLERANCES are
.0 = ±.031
.00 = ±.015
.000 = ±.005
.0000 = ±.001
Degrees = ±1/2°
Unless Stated Otherwise DIMENSIONS ARE IN INCHES.

Clopay CORPORATION
8585 Duke Boulevard
Mason, OH 45040 USA
Tel. No. 513–770–4800
Fax No. 513–770–4853

| | | | |
|---|---|---|---|
| DESCRIPTION: CLASSIC 2" EPS SINGLE CAR +38/–44 PSF | | | |
| DRAWN BY: MW | DATE: 9/7/95 | SCALE: NTS | DWG. SIZE B |
| CHECKED BY: -- | DATE: -- | SHEET 3 OF 4 | |
| DWG. NO.: 101526 – A | | VER: FPA | |

FLORIDA PRODUCT APPROVAL 48386.18

| MODELS | 24 GA SHORT | 27 GA SHORT | 27 GA FLUSH | 27 GA LONG |
|---|---|---|---|---|
| CLOPAY | 4400, 4401 | 4300, HDG | 4301, HDGF | 4310, HDGL |
| HOLMES | -- | 66, 66G, 6200 | 68, 6201 | 67, 67G, 6203 |
| IDEAL | -- | SP200 | SF200 | SE200 |

SHEET: 4 OF 4

| REVISIONS | | | | | |
|---|---|---|---|---|---|
| REV. NO. | ZONE: | DATE: | ECN NO. | APPVD: | DESCRIPTION |
| 22 | – | – | – | – | SEE REVISION HISTORY ON SHEET ONE. |

2" TRACK CONFIGURATION.

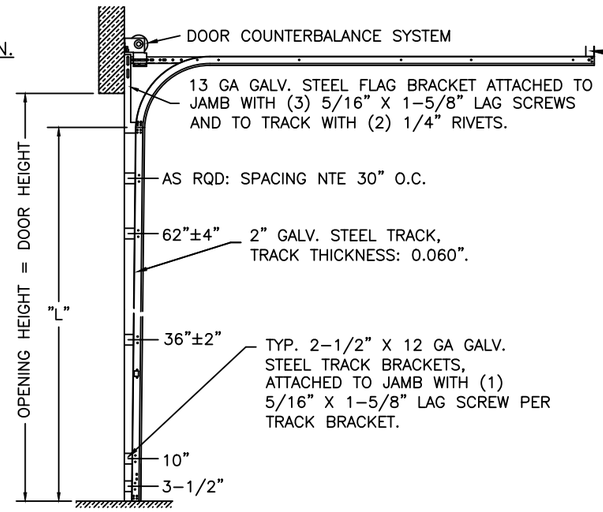


HORIZONTAL TRACK SUPPORT BY DOOR INSTALLER (TO SUIT).

NOTE: TRACK CONFIGURATION ABOVE THE DOOR OPENING DOES NOT AFFECT THE WIND LOAD RATING OF THIS DOOR.

| DOOR HEIGHT | "L" |
|---|---|
| 6'-6" | 70" |
| 7'-0" | 76" |
| 7'-6" | 82" |
| 8'-0" | 88" |
| 8'-6" | 94" |
| 9'-0" | 100" |
| 9'-6" | 106" |
| 10'-0" | 112" |
| 10'-6" | 118" |
| 11'-0" | 124" |
| 11'-6" | 130" |
| 12'-0" | 136" |
| 12'-6" | 142" |
| 13'-0" | 148" |
| 13'-6" | 154" |
| 14'-0" | 160" |
| 14'-6" | 166" |
| 15'-0" | 172" |
| 15'-6" | 178" |
| 16'-0" | 184" |

JAMB CONFIGURATION.

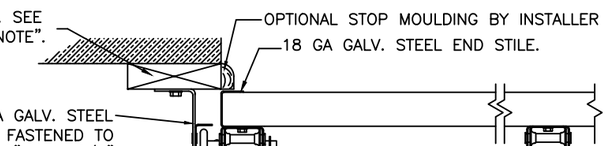

2x6 SYP WOOD JAMB. SEE "JAMB PREPARATION NOTE".

OPTIONAL STOP MOULDING BY INSTALLER (TO SUIT).

18 GA GALV. STEEL END STILE.

2-1/2" X 12 GA GALV. STEEL TRACK BRACKETS FASTENED TO WOOD JAMBS WITH 5/16" X 1-5/8" LAG SCREWS.

7/16" I.D. ROUND PUSH NUT FASTENER.

18 GA. GALV. STEEL CENTER HINGE FASTENED TO DOOR W/(4) EACH #14x5/8" SHEET METAL SCREWS.

14 GA. GALV. STEEL ROLLER HINGES FASTENED TO END STILES W/(4) EACH #14x5/8" SHEET METAL SCREWS AND (4) 1/4" SELF TAPPING SCREWS PER END HINGE.

2" GALV. STEEL TRACK FASTENED TO 12 GA GALV STEEL TRACK BRACKETS WITH EITHER (2) 1/4" DIA. RIVETS OR (1) 1/4" X 5/8" BOLT & NUT PER TRACK BRACKET.

2" DIA. SHORT STEM, 10 BALL STEEL ROLLER WITH STEEL OR NYLON TIRE.

SECTION C-C

PREPARATION OF JAMBS BY OTHERS.

LHR BRACKET (2-1/2" x 5-3/4" x 12GA) ATTACHED WITH (2) 1/4" x 3/4" SELF TAPPING SCREWS.

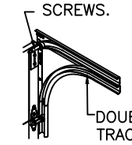

DOUBLE HORIZONTAL TRACK.

DOUBLE TRACK LOW HEADROOM OPTION

3" TRACK IS ALSO AVAILABLE.

DESIGN ENGINEER:
JAMES D. WHEELER, P.E.
FLORIDA LICENSE No. 91932

DESIGN LOADS: +38.0 P.S.F. & -44.0 P.S.F.
TEST LOADS: +57.0 P.S.F. & -66.0 P.S.F.

Unless Stated Otherwise TOLERANCES are
.0 = ±.031
.00 = ±.015
.000 = ±.005
.0000 = ±.001
Degrees = ±1/2°
Unless Stated Otherwise DIMENSIONS ARE IN INCHES.


Clopay CORPORATION
8585 Duke Boulevard
Mason, OH 45040 USA
Tel. No. 513-770-4800
Fax No. 513-770-4853


MANUFACTURING PRODUCT CODE: DSIE-1F171

PART NO.: N/A

WINDLOAD RATING: W6 DP38

DESCRIPTION: CLASSIC 2" EPS SINGLE CAR +38/-44 PSF

| | | | |
|---|---|---|---|
| DRAWN BY: MW | DATE: 9/7/95 | SCALE: NTS | DWG. SIZE B |
| CHECKED BY: -- | DATE: -- | SHEET 4 OF 4 | |
| DWG. NO.: 101526 - A | | VER: FPA | |

FLORIDA PRODUCT APPROVAL 48386.18