MODELS	24 GA SHORT	27 GA SHORT	27 GA FLUSH	27 GA LONG
CLOPAY	4400, 4401	4300, HDG	4301, HDGF	4310, HDGL
HOLMES	--	66, 66G, 6200	68, 6201	67, 67G, 6203
IDEAL	--	SP200	SF200	SE200

DOOR HEIGHT	# OF SECTIONS
UP TO 7'0"	4
7'3" TO 8'0"	5
8'3" TO 8'9"	5
9'0" TO 10'6"	6
10'9" TO 12'3"	7
12'6" TO 14'0"	8
14'3" TO 15'9"	9
16'0"	10
MAX SECTION HEIGHT: 21"	

SHEET 1 OF 2

REV	DATE	DESCRIPTION
8	9/2005	ADDED ROLLER OPTION
9	11/30/07	ADDED EXTENDED HEIGHTS AND COMBINED CLOPAY AND HOLMES M/N
10	05/12/08	ADDED MPC INFO AND HDGF, 66G, 67G
11	02/07/11	UPDATED MODEL NUMBERS.
12	01/31/12	REVISED WIND SPEED TABLE FOR ASCE7-10.
13	04/26/12	ADDED IMPACT RESISTANT OPTION.
14	11/09/20	REVISED TITLE BLOCK; REMOVED WIND SPEED TABLE.
15	09/26/23	UPDATED U-BARS TO 80 KSI; ADDED FASTENERS AND PUSH NUTS.

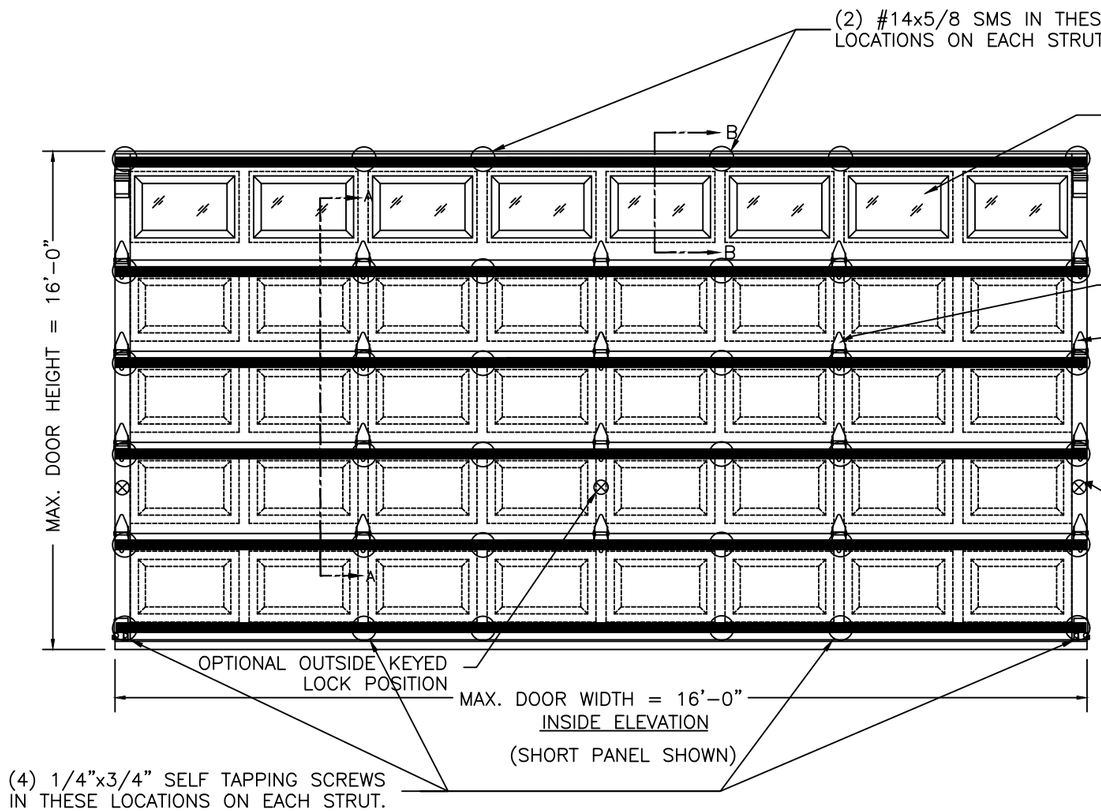

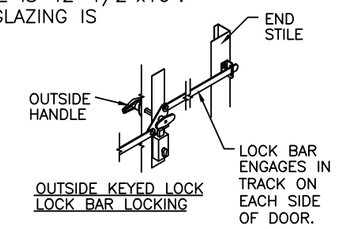

OUTSIDE KEYED LOCK
LOCK BAR LOCKING

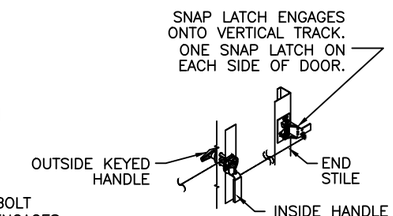

OUTSIDE KEYED LOCK
SNAP LATCH LOCK OPTION

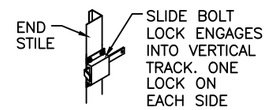

INSIDE SLIDE BOLT
LOCK OPTION

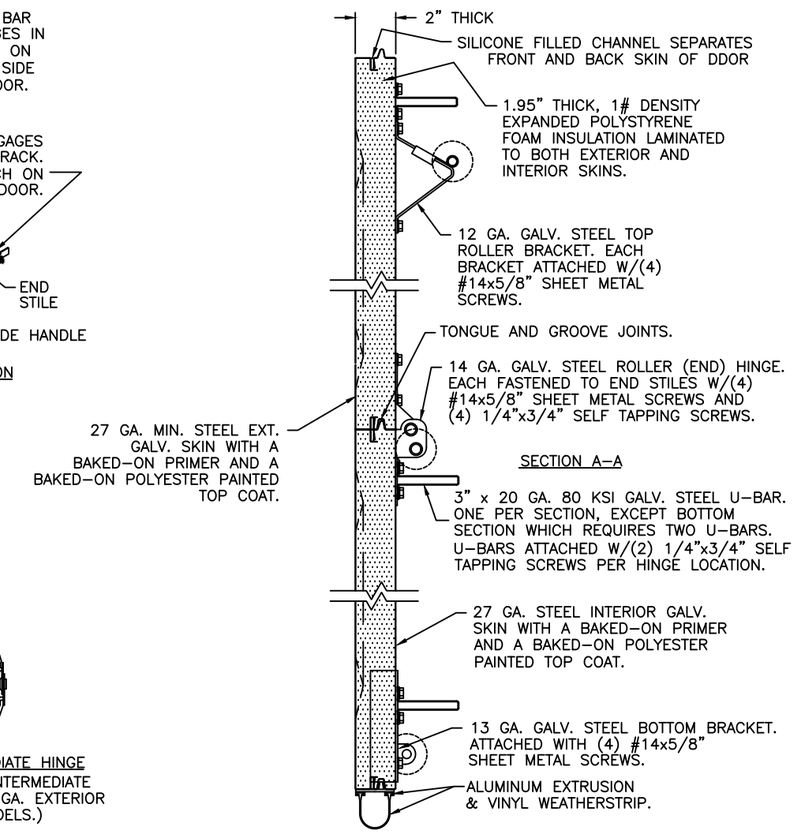

SECTION A-A

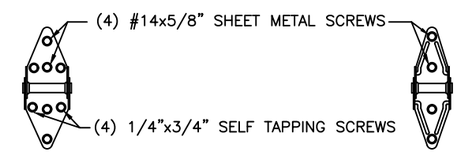

14 GA. END HINGE

18 GA. INTERMEDIATE HINGE
(NOTE: 14 GA. INTERMEDIATE HINGES ON 24 GA. EXTERIOR SKIN DOOR MODELS.)

JAMES D. WHEELER
LICENSE
No. 91932
STATE OF
FLORIDA
PROFESSIONAL ENGINEER

Jim Wheeler
Digitally signed by Jim Wheeler
Date: 2026.08.19 10:50:02 -04'00'

SEE SHEET TWO FOR
IMPACT RESISTANT CONSTRUCTION DETAIL "A"

DESIGN ENGINEER:
JAMES D. WHEELER, P.E.
FLORIDA LICENSE No. 91932

DESIGN LOADS: +25.5 PSF & -25.5 PSF
TEST LOADS: +38.0 PSF & -38.0 PSF

ORIGINAL DRAWINGS ARE SIGNED IN BLUE INK WITH A RAISED SEAL (EMBOSS).

Clopay Corporation

CLOPAY CORPORATION
8585 DUKE BLVD.
MASON, OH 45040

(513) 770-4800

Clopay Corporation All Rights Reserved.

MANUFACTURING PRODUCT CODE	MPC: DSIE-1F171
DATE:	6/14/95
DRAWN BY:	MWW
CHECKED BY:	
WINDLOAD RATING	W4
MAX. SIZE:	16'0" x 16'0"
DESCRIPTION:	WINDLOAD MODELS 4400, 4401, 4310, HDG, HDGL, 4300, 4301
	B
DRAWING NUMBER:	101481

FLORIDA PRODUCT APPROVAL 48386.13

MODELS	24 GA SHORT	27 GA SHORT	27 GA FLUSH	27 GA LONG
CLOPAY	4400, 4401	4300, HDG	4301, HDGF	4310, HDGL
HOLMES	--	66, 66G, 6200	68, 6201	67, 67G, 6203
IDEAL	--	SP200	SF200	SE200

REV	DATE	DESCRIPTION
15	--	SEE REVISION HISTORY ON SHEET ONE.

VERTICAL JAMB ATTACHMENT (WOOD FRAME BUILDINGS):
1/2"x3" LAG SCREWS ON 17.5" CENTERS. 1" O.D. MIN. WASHER REQUIRED. LAG SCREWS MAY BE COUNTERSUNK (BUT NOT REQUIRED) TO PROVIDE A FLUSH MOUNTING SURFACE. HORIZONTAL JAMBS DO NOT TRANSFER LOAD.

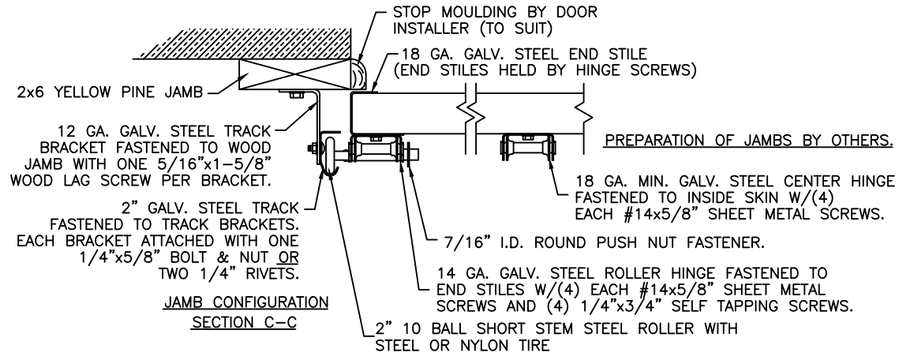

VERTICAL JAMB ATTACHMENT (C-90 BLOCK OR 2,000 PSI MIN. CONCRETE COLUMN):
3/8"x4" SLEEVE ANCHOR BOLTS ON 20" CENTERS (C-90 BLOCK) OR 24" CENTERS (2,000 PSI MIN. CONCRETE) OR 1/4"x4" TAPCON SCREWS ON 16-3/4" CENTERS (2,000 PSI MIN. CONCRETE). WASHERS INCLUDED WITH SLEEVE ANCHORS, 1" O.D. MIN. WASHERS REQUIRED WITH TAPCONS. ANCHORS MAY BE COUNTERSUNK (BUT NOT REQUIRED) TO PROVIDE A FLUSH MOUNTING SURFACE. HORIZONTAL JAMBS DO NOT TRANSFER LOAD.

NOTE: THE DESIGN OF THE SUPPORTING STRUCTURAL ELEMENTS SHALL BE THE RESPONSIBILITY OF THE PROFESSIONAL OF RECORD FOR THE BUILDING OR STRUCTURE AND IN ACCORDANCE WITH CURRENT BUILDING CODES FOR THE LOADS LISTED ON THE DRAWING.

NOTE: TRACK CONFIGURATION ABOVE THE DOOR OPENING DOES NOT AFFECT THE WIND LOAD RATING OF THIS DOOR.

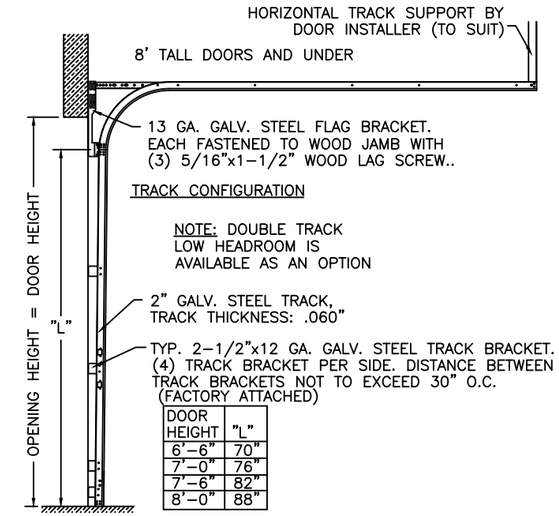

DOOR HEIGHT	"L"
6'-6"	70"
7'-0"	76"
7'-6"	82"
8'-0"	88"

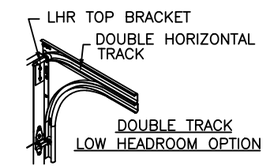

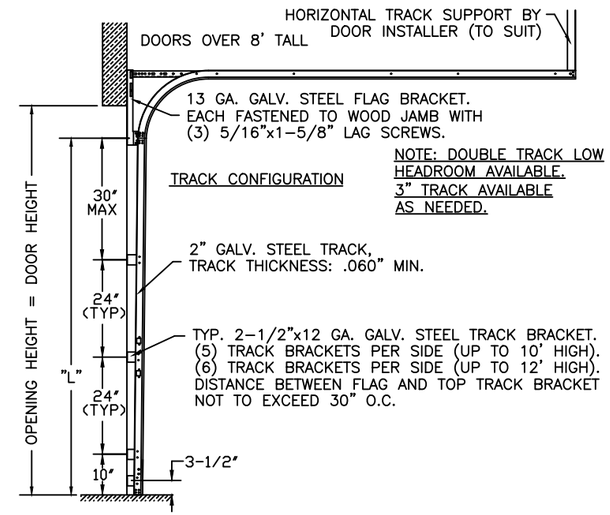

DOOR HEIGHT	"L"
8'6"	94"
9'0"	100"
9'6"	106"
10'0"	112"
10'6"	118"
11'0"	124"
11'6"	130"
12'0"	136"
12'6"	142"
13'0"	148"
13'6"	154"
14'0"	160"
14'6"	166"
15'0"	172"
15'6"	178"
16'0"	184"

IMPACT RESISTANT ASSEMBLY DETAILS
DRAWING 101481-A

SECTION B-B (IMPACT-RESISTANT GLAZING OPTION)

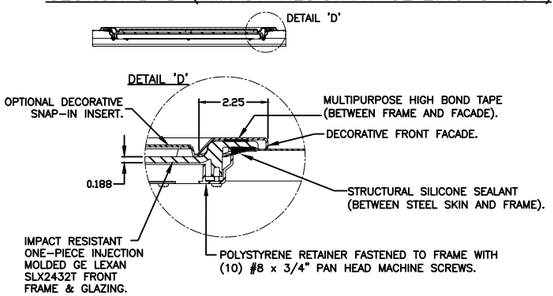

IMPACT-RESISTANT CONSTRUCTION:
SOLID DOORS (NO GLAZING) OR DOORS WITH OPTIONAL IMPACT-RESISTANT GLAZING ARE IMPACT-RESISTANT. OPTIONAL INJECTION-MOLDED POLYCARBONATE FRONT FRAME AND GLAZING IS GE LEXAN SLX2432T, AN APPROVED CC2 PLASTIC IN ACCORDANCE WITH IBC/FBC 2606.
THE ENITRE DOOR ASSEMBLY INSTALLED IN COMPLIANCE WITH THIS SECTION MEETS THE WIND LOAD REQUIREMENTS OF THE FLORIDA BUILDING CODE AND INTERNATIONAL BUILDING CODE AND MEETS THE IMPACT-RESISTANT REQUIREMENTS (REF. CHAPTER 16 FBC/IBC).

DESIGN LOADS: +25.5 PSF & -25.5 PSF
TEST LOADS: +38.0 PSF & -38.0 PSF

DESIGN ENGINEER:
JAMES D. WHEELER, P.E.
FLORIDA LICENSE No. 91932

Clopay Corporation

CLOPAY CORPORATION
8585 DUKE BLVD.
MASON, OH 45040
(513) 770-4800

Clopay Corporation All Rights Reserved.

MANUFACTURING PRODUCT CODE	WINDLOAD RATING	MAX. SIZE:
MPC: DSIE-1F171	W4	16'0" x 16'0"
DATE: 6/14/95	DESCRIPTION: WINDLOAD MODELS 4400, 4401, 4310, HDG, HDGL, 4300, 4301	
DRAWN BY: MWW		
CHECKED BY:	B	DRAWING NUMBER: 101481

FLORIDA PRODUCT APPROVAL 48386.13