EVALUATION REPORT OF
KIRBY BUILDING SYSTEMS
'R-PANEL'

FLORIDA BUILDING CODE 8TH EDITION (2023)
FLORIDA PRODUCT APPROVAL
FL 4837.2-R6
PANEL WALLS
SIDING

Prepared For:
Kirby Building Systems
124 Kirby Drive
Portland, TN 37148
Telephone: (615) 745-6007

Prepared By:
Bala Sockalingam, Ph.D., P.E.
Florida Professional Engineer #62240
1216 N Lansing Ave., Suite C
Tulsa, OK 74106
Telephone: (918) 492-5992

This report consists of
Evaluation Report (2 Pages including cover)
Installation Details (1 Page)
Load Span Tables (6 Pages)

Report No. C2729-2
Date: 9.20.2023

BALA SOCKALINGAM
LICENSE
No. 62240
STATE OF
FLORIDA
PROFESSIONAL ENGINEER

This item has been digitally signed and sealed by Bala Sockalingam, PE, on the date indicated.

Printed copies of this document are not considered signed and sealed and this signature must be verified on any electronic copies.

2023.09.20
17:42:56 -05'00'

Manufacturer:	Kirby Building Systems
Manufacturing Locations:	124 Kirby Drive, Portland, TN 37148 200 Whetstone Road, Swansea, SC 29160 600 Apache Trail, Terrell, TX 75160
Product Name:	R-Panel
Panel Description:	36" wide coverage with (4) 1.25" high ribs
Materials:	Min 26 ga. with galvanized coated steel (ASTM A653) or Galvalume coated steel (ASTM A792) or painted steel (ASTM A755) as per FBC 2023 Section 1405.2. Yield Stress 50 or 80 ksi.
Support Description:	Min 16 ga., min 50 ksi steel section (Must be designed by others)
Design Pressures:	The allowable uniform inward and outward loads shown on the load span tables were determined in accordance with FBC 2023 Section 1504.3.2 and 2210.1 and AISI S100-16(2020) w/S2-20. Purlin, frames and support connections must be designed to resist all loads.
Panel Attachment:	#12-14 x 1-1/4" long self-drilling hex-head screws with washer. Corrosion resistant as per FBC 2023 Section 1405.17.
At intermediate supports	at 12" o.c. across panel width
At panel ends	at 7"-5"-7" o.c. across panel width
Sidelap Attachment:	¼"-14 x 7/8" long self-drilling screws with washer at max. 30" o.c. Corrosion resistant as per FBC 2023 Section 1405.17.
Code Compliance:	The product described herein has demonstrated compliance with FBC 2023 Section 1404.5
Product Limitations:	Design wind loads shall be determined for each project in accordance with FBC 2023 Section 1609 or ASCE 7-22 using allowable stress design. The design pressure for other support spacing may be computed using rational analysis prepared by a Florida Professional Engineer or based on Kirby's load span tables. This product is not approved for use in the High Velocity Hurricane Zone.

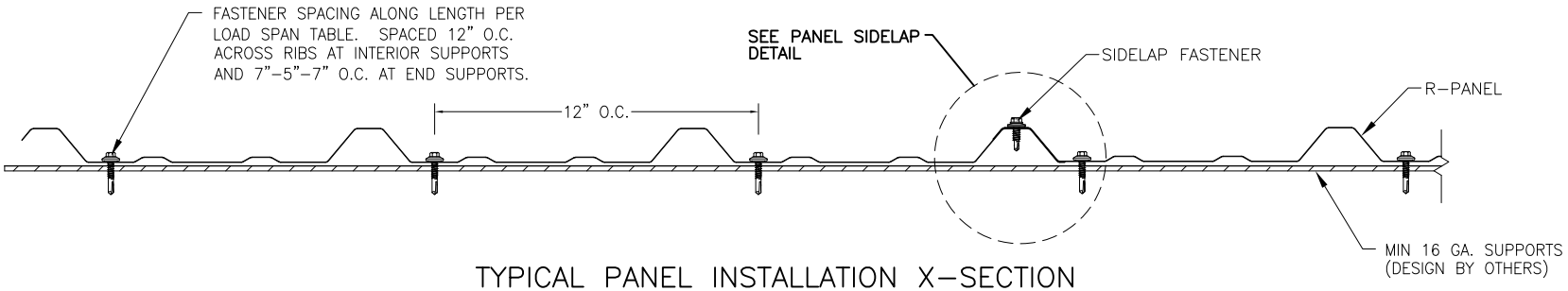

TYPICAL PANEL INSTALLATION X-SECTION

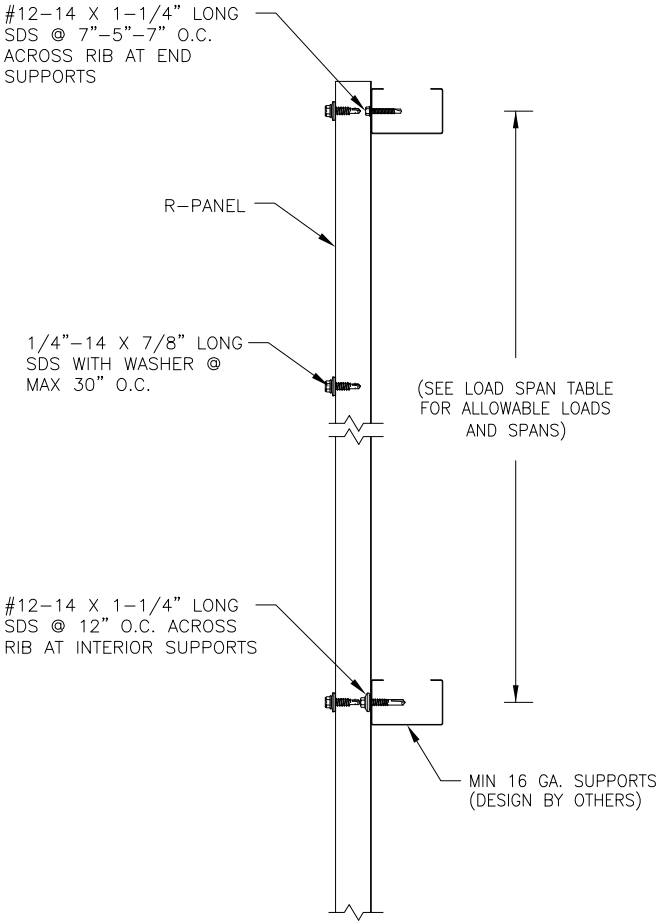

SECTION VIEW

GENERAL NOTES:

1. WALL PANEL HAS BEEN DESIGNED IN ACCORDANCE WITH THE FLORIDA BUILDING CODE (FBC).
2. WALL PANELS SHALL BE MIN 26 GA. EFFECTIVE COVERING WIDTH OF PANEL = 36".
3. THE WALL PANELS SHALL BE INSTALLED OVER STRUCTURE AS SPECIFIED ON THIS DRAWING.
4. REQUIRED DESIGN WIND LOADS SHALL BE DETERMINED FOR EACH PROJECT. THIS PANEL SYSTEM MAY NOT BE INSTALLED WHEN THE REQUIRED DESIGN WIND LOADS ARE GREATER THAN THE ALLOWABLE DESIGN LOADS.
5. ALL FASTENERS MUST BE IN ACCORDANCE WITH THIS DRAWING & THE FLORIDA BUILDING CODE. IF A DIFFERENCE OCCURS BETWEEN THE MINIMUM REQUIREMENTS OF THIS DRAWING & THE CODE, THE CODE SHALL CONTROL.
6. SUPPORTS MUST BE DESIGNED TO WITHSTAND WIND LOADS AS REQUIRED FOR EACH APPLICATION AND ARE THE RESPONSIBILITY OF OTHERS.

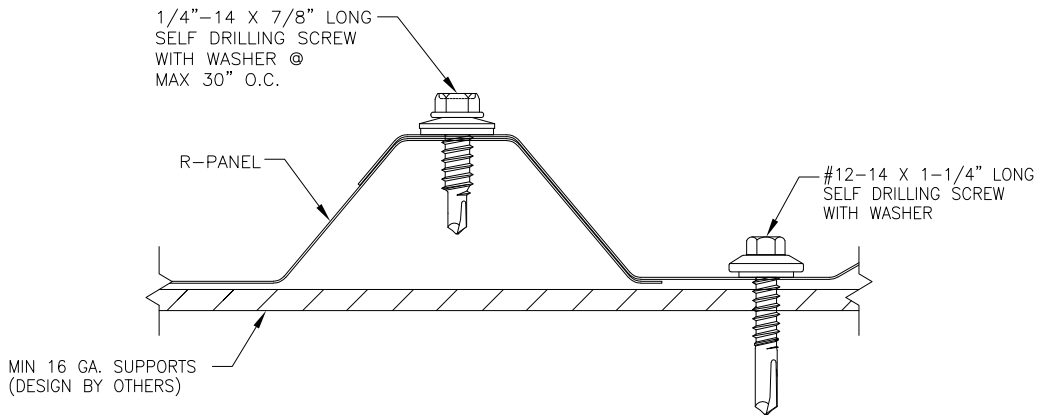

PANEL SIDELAP

DRAWN BY: B.S.	CHECKED BY: J.S.
PLOT:	DATE: 9/12/2023

NO.	REVISION DESCRIPTION	BY	DATE

DRAWING TITLE: R-PANEL

MANUFACTURER: KIRBY BUILDING SYSTEMS, 124 KIRBY DRIVE, PORTLAND, TN 37148, 615-745-6007

CONSULTANTS: BALA SOCKALINGAM, PH.D., P.E.
1216 N LANSING AVE, SUITE C
TULSA, OK 74106
PHONE: 918-492-5992 FAX: 866-366-1543

DRAWING NO. 2729-2 REV.

SHEET NO. 1 OF 1

Kirby Building Systems R-Panel - *WALL SHEETING*

R-Panel Profile [24 Gage, F_y = 50 ksi]

Panel Material Information					Panel Properties per foot of panel width				
						Top in Comp.		Bottom in Comp.	
Panel Gage	Thickness (in.)	Yield (Ksi)	Tensile (Ksi)	Panel Wt. (Psf)	I_x (Gross) ($in.^4$)	S_x (eff.) ($in.^3$)	M_a (Kip-in.)	S_x (eff.) ($in.^3$)	M_a (Kip-in.)
24	0.0222	50	65	1.08	0.0633	0.0582	1.7427	0.0595	1.7810

Wind Pressure (psf): Panel: (Stress, Deflection, and Web Crippling)

Span (Ft)	Simple Span			2 Equal Spans			3 Equal Spans		
	Stress	Deflection		Stress	Deflection		Stress	Deflection	
		L/60	L/240		**L/60**	L/240		**L/60**	L/240
3.0	129	n/c	n/c	91	n/c	n/c	100	n/c	n/c
3.5	95	n/c	85	78	n/c	n/c	86	n/c	n/c
4.0	73	n/c	57	69	n/c	n/c	75	n/c	n/c
4.5	57	n/c	40	58	n/c	n/c	67	n/c	n/c
5.0	46	n/c	29	47	n/c	n/c	59	n/c	49
5.5	38	n/c	22	39	n/c	n/c	49	n/c	37
6.0	32	n/c	17	33	n/c	n/c	41	n/c	28
6.5	27	n/c	13	28	n/c	n/c	35	n/c	22
7.0	24	n/c	11	24	n/c	23	30	n/c	18
7.5	21	n/c	9	21	n/c	18	26	n/c	14

Wind Suction (psf): Panel: (Stress and Deflection)

Span (Ft)	Simple Span			2 Equal Spans			3 Equal Spans		
	Stress	Deflection		Stress	Deflection		Stress	Deflection	
		L/60	L/240		**L/60**	L/240		**L/60**	L/240
3.0	-132	n/c	n/c	-126	n/c	n/c	-156	n/c	n/c
3.5	-97	n/c	-93	-93	n/c	n/c	-116	n/c	n/c
4.0	-74	n/c	-62	-72	n/c	n/c	-89	n/c	n/c
4.5	-59	n/c	-44	-57	n/c	n/c	-71	n/c	n/c
5.0	-47	n/c	-32	-46	n/c	n/c	-57	n/c	n/c
5.5	-39	n/c	-24	-38	n/c	n/c	-48	n/c	n/c
6.0	-33	n/c	-18	-32	n/c	n/c	-40	n/c	n/c
6.5	-28	n/c	-15	-27	n/c	n/c	-34	n/c	-32
7.0	-24	n/c	-12	-24	n/c	n/c	-29	n/c	-25
7.5	-21	n/c	-9	-21	n/c	n/c	-26	n/c	-21

Table Notes:

1. Section properties and allowables are calculated in accordance with North American Specification for the Design of Cold-Formed Steel Structural Members, 2016 Edition (Reaffirmed 2020), with Supplement 2, 2020 Edition.
2. Panels must be installed as per Evaluation Report FL 4837.2 and NBG's current installation procedure.

Kirby Building Systems R-Panel - *WALL SHEETING*

Wind Suction (psf): Fasteners: (Pull-out, Pull-Over, and Tensile Failure)

Span (Ft)	Secondary Member Thickness (in.)						
	0.060	**0.067**	**0.075**	**0.089**	**0.099**	**0.105**	**0.120**
3.0	-75	-84	-91	-91	-91	-91	-91
3.5	-64	-72	-78	-78	-78	-78	-78
4.0	-56	-63	-68	-68	-68	-68	-68
4.5	-50	-56	-61	-61	-61	-61	-61
5.0	-45	-50	-55	-55	-55	-55	-55
5.5	-41	-46	-50	-50	-50	-50	-50
6.0	-38	-42	-45	-45	-45	-45	-45
6.5	-35	-39	-42	-42	-42	-42	-42
7.0	-32	-36	-39	-39	-39	-39	-39
7.5	-30	-34	-36	-36	-36	-36	-36
n/c = value does not control (i.e., value is greater than controlling stress value)							

Table Notes:

1. Section properties and allowables are calculated in accordance with North American Specification for the Design of Cold-Formed Steel Structural Members, 2016 Edition (Reaffirmed 2020), with Supplement 2, 2020 Edition.
2. Panels must be installed as per Evaluation Report FL 4837.2 and NBG's current installation procedure.

Kirby Building Systems R-Panel - *WALL SHEETING*

R-Panel Profile [24 Gage, F_y = 80 ksi]

Panel Material Information					Panel Properties per foot of panel width				
						Top in Comp.		Bottom in Comp.	
Panel Gage	Thickness (in.)	Yield (Ksi)	Tensile (Ksi)	Panel Wt. (Psf)	I_x (Gross) ($in.^4$)	S_x (eff.) ($in.^3$)	M_a (Kip-in.)	S_x (eff.) ($in.^3$)	M_a (Kip-in.)
24	0.0222	80	82	1.08	0.0633	0.0543	1.9520	0.0588	2.1133

Wind Pressure (psf): Panel: (Stress, Deflection, and Web Crippling)

Span (Ft)	Simple Span			2 Equal Spans			3 Equal Spans		
	Stress	Deflection		Stress	Deflection		Stress	Deflection	
		L/60	L/240		**L/60**	L/240		**L/60**	L/240
3.0	145	n/c	130	110	n/c	n/c	120	n/c	n/c
3.5	106	n/c	82	94	n/c	n/c	103	n/c	n/c
4.0	81	n/c	55	82	n/c	n/c	90	n/c	n/c
4.5	64	n/c	39	68	n/c	n/c	80	n/c	65
5.0	52	n/c	28	56	n/c	n/c	69	n/c	48
5.5	43	n/c	21	46	n/c	46	57	n/c	36
6.0	36	n/c	16	39	n/c	35	48	n/c	27
6.5	31	n/c	13	33	n/c	28	41	n/c	22
7.0	27	n/c	10	29	n/c	22	36	n/c	17
7.5	23	n/c	8	25	n/c	18	31	n/c	14

Wind Suction (psf): Panel: (Stress and Deflection)

Span (Ft)	Simple Span			2 Equal Spans			3 Equal Spans		
	Stress	Deflection		Stress	Deflection		Stress	Deflection	
		L/60	L/240		**L/60**	L/240		**L/60**	L/240
3.0	-157	n/c	-147	-140	n/c	n/c	-173	n/c	n/c
3.5	-115	n/c	-92	-104	n/c	n/c	-128	n/c	n/c
4.0	-88	n/c	-62	-80	n/c	n/c	-99	n/c	n/c
4.5	-70	n/c	-44	-63	n/c	n/c	-79	n/c	n/c
5.0	-56	n/c	-32	-51	n/c	n/c	-64	n/c	n/c
5.5	-47	n/c	-24	-43	n/c	n/c	-53	n/c	-51
6.0	-39	n/c	-18	-36	n/c	n/c	-45	n/c	-39
6.5	-33	n/c	-14	-31	n/c	n/c	-38	n/c	-31
7.0	-29	n/c	-12	-26	n/c	n/c	-33	n/c	-25
7.5	-25	n/c	-9	-23	n/c	n/c	-29	n/c	-20

Table Notes:

1. Section properties and allowables are calculated in accordance with North American Specification for the Design of Cold-Formed Steel Structural Members, 2016 Edition (Reaffirmed 2020), with Supplement 2, 2020 Edition.
2. Panels must be installed as per Evaluation Report FL 4837.2 and NBG's current installation procedure.

Kirby Building Systems R-Panel - *WALL SHEETING*

Wind Suction (psf): Fasteners: (Pull-out, Pull-Over, and Tensile Failure)

Span (Ft)	Secondary Member Thickness (in.)						
	0.060	**0.067**	**0.075**	**0.089**	**0.099**	**0.105**	**0.120**
3.0	-75	-84	-91	-91	-91	-91	-91
3.5	-64	-72	-78	-78	-78	-78	-78
4.0	-56	-63	-68	-68	-68	-68	-68
4.5	-50	-56	-61	-61	-61	-61	-61
5.0	-45	-50	-55	-55	-55	-55	-55
5.5	-41	-46	-50	-50	-50	-50	-50
6.0	-38	-42	-45	-45	-45	-45	-45
6.5	-35	-39	-42	-42	-42	-42	-42
7.0	-32	-36	-39	-39	-39	-39	-39
7.5	-30	-34	-36	-36	-36	-36	-36
n/c = value does not control (i.e., value is greater than controlling stress value)							

Table Notes:

1. Section properties and allowables are calculated in accordance with North American Specification for the Design of Cold-Formed Steel Structural Members, 2016 Edition (Reaffirmed 2020), with Supplement 2, 2020 Edition.
2. Panels must be installed as per Evaluation Report FL 4837.2 and NBG's current installation procedure.

Kirby Building Systems R-Panel - *WALL SHEETING*

R-Panel Profile [26 Gage, F_y = 50 ksi]

Panel Material Information					Panel Properties per foot of panel width				
						Top in Comp.		Bottom in Comp.	
Panel Gage	Thickness (in.)	Yield (Ksi)	Tensile (Ksi)	Panel Wt. (Psf)	I_x (Gross) ($in.^4$)	S_x (eff.) ($in.^3$)	M_a (Kip-in.)	S_x (eff.) ($in.^3$)	M_a (Kip-in.)
26	0.0177	50	65	0.86	0.0493	0.0400	1.1987	0.0468	1.4017

Wind Pressure (psf): Panel: (Stress, Deflection, and Web Crippling)

Span (Ft)	Simple Span			2 Equal Spans			3 Equal Spans		
	Stress	Deflection		Stress	Deflection		Stress	Deflection	
		L/60	L/240		**L/60**	L/240		**L/60**	L/240
3.0	89	n/c	n/c	60	n/c	n/c	66	n/c	n/c
3.5	65	n/c	60	51	n/c	n/c	56	n/c	n/c
4.0	50	n/c	40	45	n/c	n/c	49	n/c	n/c
4.5	39	n/c	28	40	n/c	n/c	44	n/c	n/c
5.0	32	n/c	21	36	n/c	n/c	39	n/c	35
5.5	26	n/c	15	31	n/c	n/c	36	n/c	27
6.0	22	n/c	12	26	n/c	n/c	32	n/c	21
6.5	19	n/c	9	22	n/c	21	27	n/c	16
7.0	16	n/c	8	19	n/c	16	24	n/c	13
7.5	14	n/c	6	17	n/c	13	21	n/c	11

Wind Suction (psf): Panel: (Stress and Deflection)

Span (Ft)	Simple Span			2 Equal Spans			3 Equal Spans		
	Stress	Deflection		Stress	Deflection		Stress	Deflection	
		L/60	L/240		**L/60**	L/240		**L/60**	L/240
3.0	-104	n/c	n/c	-86	n/c	n/c	-107	n/c	n/c
3.5	-76	n/c	-71	-64	n/c	n/c	-79	n/c	n/c
4.0	-58	n/c	-47	-49	n/c	n/c	-61	n/c	n/c
4.5	-46	n/c	-33	-39	n/c	n/c	-48	n/c	n/c
5.0	-37	n/c	-24	-32	n/c	n/c	-39	n/c	n/c
5.5	-31	n/c	-18	-26	n/c	n/c	-33	n/c	n/c
6.0	-26	n/c	-14	-22	n/c	n/c	-27	n/c	n/c
6.5	-22	n/c	-11	-19	n/c	n/c	-23	n/c	-23
7.0	-19	n/c	-9	-16	n/c	n/c	-20	n/c	-18
7.5	-17	n/c	-7	-14	n/c	n/c	-18	n/c	-15

Table Notes:

1. Section properties and allowables are calculated in accordance with North American Specification for the Design of Cold-Formed Steel Structural Members, 2016 Edition (Reaffirmed 2020), with Supplement 2, 2020 Edition.
2. Panels must be installed as per Evaluation Report FL 4837.2 and NBG's current installation procedure.

Kirby Building Systems R-Panel - *WALL SHEETING*

Wind Suction (psf): Fasteners: (Pull-out, Pull-Over, and Tensile Failure)

Span (Ft)	Secondary Member Thickness (in.)						
	0.060	**0.067**	**0.075**	**0.089**	**0.099**	**0.105**	**0.120**
3.0	-72	-72	-72	-72	-72	-72	-72
3.5	-62	-62	-62	-62	-62	-62	-62
4.0	-54	-54	-54	-54	-54	-54	-54
4.5	-48	-48	-48	-48	-48	-48	-48
5.0	-43	-43	-43	-43	-43	-43	-43
5.5	-40	-40	-40	-40	-40	-40	-40
6.0	-36	-36	-36	-36	-36	-36	-36
6.5	-33	-33	-33	-33	-33	-33	-33
7.0	-31	-31	-31	-31	-31	-31	-31
7.5	-29	-29	-29	-29	-29	-29	-29
n/c = value does not control (i.e., value is greater than controlling stress value)							

Table Notes:

1. Section properties and allowables are calculated in accordance with North American Specification for the Design of Cold-Formed Steel Structural Members, 2016 Edition (Reaffirmed 2020), with Supplement 2, 2020 Edition.
2. Panels must be installed as per Evaluation Report FL 4837.2 and NBG's current installation procedure.

Kirby Building Systems R-Panel - *WALL SHEETING*

R-Panel Profile [26 Gage, F_y = 80 ksi]

Panel Material Information					Panel Properties per foot of panel width				
						Top in Comp.		Bottom in Comp.	
Panel Gage	Thickness (in.)	Yield (Ksi)	Tensile (Ksi)	Panel Wt. (Psf)	I_x (Gross) ($in.^4$)	S_x (eff.) ($in.^3$)	M_a (Kip-in.)	S_x (eff.) ($in.^3$)	M_a (Kip-in.)
26	0.0177	80	82	0.86	0.0490	0.0378	1.3590	0.0462	1.6593

Wind Pressure (psf): Panel: (Stress, Deflection, and Web Crippling)

Span (Ft)	Simple Span			2 Equal Spans			3 Equal Spans		
	Stress	Deflection		Stress	Deflection		Stress	Deflection	
		L/60	L/240		**L/60**	L/240		**L/60**	L/240
3.0	101	n/c	94	72	n/c	n/c	79	n/c	n/c
3.5	74	n/c	59	62	n/c	n/c	68	n/c	n/c
4.0	57	n/c	40	54	n/c	n/c	59	n/c	n/c
4.5	45	n/c	28	48	n/c	n/c	53	n/c	48
5.0	36	n/c	20	43	n/c	n/c	47	n/c	35
5.5	30	n/c	15	36	n/c	34	43	n/c	26
6.0	25	n/c	12	30	n/c	26	37	n/c	20
6.5	21	n/c	9	26	n/c	20	32	n/c	16
7.0	18	n/c	7	22	n/c	16	28	n/c	13
7.5	16	n/c	6	19	n/c	13	24	n/c	10

Wind Suction (psf): Panel: (Stress and Deflection)

Span (Ft)	Simple Span			2 Equal Spans			3 Equal Spans		
	Stress	Deflection		Stress	Deflection		Stress	Deflection	
		L/60	L/240		**L/60**	L/240		**L/60**	L/240
3.0	-123	n/c	-111	-96	n/c	n/c	-117	n/c	n/c
3.5	-90	n/c	-70	-71	n/c	n/c	-88	n/c	n/c
4.0	-69	n/c	-47	-55	n/c	n/c	-68	n/c	n/c
4.5	-55	n/c	-33	-44	n/c	n/c	-54	n/c	n/c
5.0	-44	n/c	-24	-36	n/c	n/c	-44	n/c	n/c
5.5	-37	n/c	-18	-29	n/c	n/c	-37	n/c	n/c
6.0	-31	n/c	-14	-25	n/c	n/c	-31	n/c	-29
6.5	-26	n/c	-11	-21	n/c	n/c	-26	n/c	-23
7.0	-23	n/c	-9	-18	n/c	n/c	-23	n/c	-18
7.5	-20	n/c	-7	-16	n/c	n/c	-20	n/c	-15

Table Notes:

1. Section properties and allowables are calculated in accordance with North American Specification for the Design of Cold-Formed Steel Structural Members, 2016 Edition (Reaffirmed 2020), with Supplement 2, 2020 Edition.
2. Panels must be installed as per Evaluation Report FL 4837.2 and NBG's current installation procedure.

Kirby Building Systems R-Panel - *WALL SHEETING*

Wind Suction (psf): Fasteners: (Pull-out, Pull-Over, and Tensile Failure)

Span (Ft)	Secondary Member Thickness (in.)						
	0.060	**0.067**	**0.075**	**0.089**	**0.099**	**0.105**	**0.120**
3.0	-72	-72	-72	-72	-72	-72	-72
3.5	-62	-62	-62	-62	-62	-62	-62
4.0	-54	-54	-54	-54	-54	-54	-54
4.5	-48	-48	-48	-48	-48	-48	-48
5.0	-43	-43	-43	-43	-43	-43	-43
5.5	-40	-40	-40	-40	-40	-40	-40
6.0	-36	-36	-36	-36	-36	-36	-36
6.5	-33	-33	-33	-33	-33	-33	-33
7.0	-31	-31	-31	-31	-31	-31	-31
7.5	-29	-29	-29	-29	-29	-29	-29
n/c = value does not control (i.e., value is greater than controlling stress value)							

Table Notes:

1. Section properties and allowables are calculated in accordance with North American Specification for the Design of Cold-Formed Steel Structural Members, 2016 Edition (Reaffirmed 2020), with Supplement 2, 2020 Edition.
2. Panels must be installed as per Evaluation Report FL 4837.2 and NBG's current installation procedure.