EURO-WALL, LLC

MS-MULTISLIDE SYSTEM
(NON-HVHZ) (NON-IMPACT)

GENERAL NOTES:

1. THE PRODUCT SHOWN HEREIN IS DESIGNED AND MANUFACTURED TO COMPLY WITH THE CURRENT FLORIDA BUILDING CODE (FBC), **EXCLUDING** HVHZ AND HAS BEEN EVALUATED ACCORDING TO THE FOLLOWING:
   - AAMA/WDMA/CSA 101/I.S.2/A440-22
2. ADEQUACY OF THE EXISTING STRUCTURAL CONCRETE/MASONRY, 2X AND METAL STUD FRAMING AS A MAIN WIND FORCE RESISTING SYSTEM CAPABLE OF WITHSTANDING AND TRANSFERRING APPLIED PRODUCT LOADS TO THE FOUNDATION IS THE RESPONSIBILITY OF THE ENGINEER OR ARCHITECT OF RECORD FOR THE PROJECT OF INSTALLATION.
3. 1X AND 2X BUCKS (WHEN USED) SHALL BE DESIGNED AND ANCHORED TO PROPERLY TRANSFER ALL LOADS TO THE STRUCTURE. BUCK DESIGN AND INSTALLATION IS THE RESPONSIBILITY OF THE ENGINEER OR ARCHITECT OF RECORD FOR THE PROJECT OF INSTALLATION.
4. THE INSTALLATION DETAILS DESCRIBED HEREIN ARE GENERIC AND MAY NOT REFLECT ACTUAL CONDITIONS FOR A SPECIFIC SITE. IF SITE CONDITIONS CAUSE INSTALLATION TO DEVIATE FROM THE REQUIREMENTS DETAILED HEREIN, A LICENSED ENGINEER OR ARCHITECT SHALL PREPARE SITE SPECIFIC DOCUMENTS FOR USE WITH THIS DOCUMENT.
5. APPROVED IMPACT PROTECTIVE SYSTEM **IS REQUIRED** TO PROTECT THIS PRODUCT IN AREAS REQUIRING IMPACT RESISTANCE.
6. DOOR FRAME MATERIAL: EXTRUDED ALUMINUM (6063-T5).
7. GLASS SHALL MEET THE REQUIREMENTS OF ASTM E1300 GLASS CHARTS. SEE SHEET 1 FOR GLAZING DETAILS.
8. DISSIMILAR METALS INCLUDING FASTENERS THAT MAY COME INTO CONTACT WITH ALUMINUM COMPONENTS SHALL BE PROTECTED IN ACCORDANCE WITH THE FBC.

DESIGN PRESSURE RATING			
MAX. UNIT DIMENSIONS	DESIGN PRESSURE	WATER TEST PRESSURE	MISSILE IMPACT RATING
SEE SHEET 4		7.5 PSF	-

TABLE OF CONTENTS	
SHEET	SHEET DESCRIPTION
1	GENERAL NOTES & GLAZING DETAILS
2	ELEVATION
3	ANCHOR LAYOUT
4	DESIGN PRESSURE TABLE
5	VERTICAL SECTIONS
6	HORIZONTAL SECTIONS
7	HORIZONTAL SECTIONS
8	ANCHOR DETAILS
9	ANCHOR DETAILS, INSTALLATION NOTES, & ANCHOR SCHEDULE
10	BILL OF MATERIALS
11	COMPONENTS
12	COMPONENTS
13	COMPONENTS
14	COMPONENTS

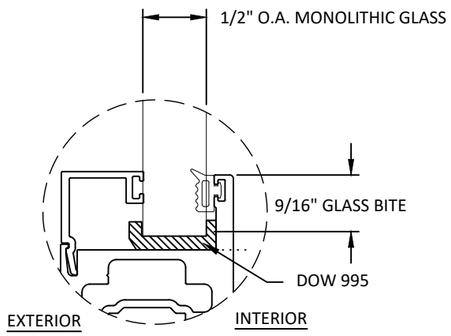

GLAZING DETAIL 1

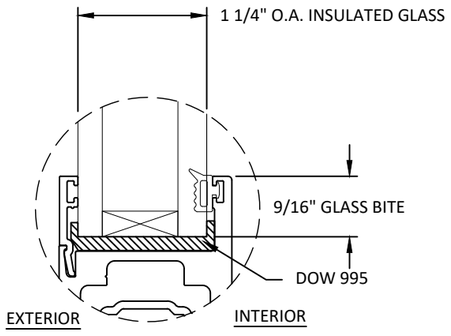

GLAZING DETAIL 2

GLAZING NOTES:
1. GLASS TYPE SHALL COMPLY WITH ASTM E1300 REQUIREMENTS.
2. SETTING BLOCKS TO BE LOCATED AT 1/4 SPAN LENGTH FOR GLASS WIDER THAN 36" AS PER FBC CHAPTER 24.
3. SETTING BLOCK DUROMETER HARDNESS OF 70-90 (SHORE A) AS REFERENCED IN FBC CHAPTER 24.
4. GLASS TYPE SHALL COMPLY WITH APPLICABLE GLAZING REQUIREMENTS PER CHAPTER 24 OF THE FBC

euro-wall
SUPERIOR BY DESIGN

EURO-WALL, LLC
P.O. BOX 8007,
NORTH PORT, FL 34290
PH: 888-989-3876

TITLE: MS MULTI-SLIDE SYSTEM (NON-HVHZ) (NON-IMPACT)
GENERAL NOTES & GLAZING DETAILS

PREPARED BY:
BUILDING DROPS, INC.
1900 NE MIAMI COURT, SUITE 2-15
MIAMI, FL 33132
PH: (954) 399-8478
FAX: (954) 744-4738
WEB: www.buildingdrops.com

REMARKS	BY	DATE

THE INSTALLATION DETAILS DESCRIBED HEREIN ARE GENERIC AND MAY NOT REFLECT ACTUAL CONDITIONS FOR A SPECIFIC SITE. IF SITE CONDITIONS CAUSE INSTALLATION TO DEVIATE FROM THE REQUIREMENTS DETAILED HEREIN, A LICENSED ENGINEER OR ARCHITECT SHALL PREPARE SITE SPECIFIC DOCUMENTS FOR USE WITH THIS DOCUMENT.

Digitally signed by Hermes F. Norero, P.E.
Reason: I am approving this document
Date: 2026.10.01 13:36:58 -04'00'

HERMES F. NORERO LICENSE No. 73778 STATE OF FLORIDA PROFESSIONAL ENGINEER

HERMES F. NORERO, P.E.
FLORIDA P.E. NO. 73778
BUILDING DROPS, INC
1900 NE MIAMI COURT, SUITE 2-15
MIAMI, FL 33132
FBPE CERT. OF AUTHORIZATION No. 29578

FL #: FL48363

DATE: 10.01.2026

DWG. BY: JR | CHK. BY: HFN

SCALE: NTS

DWG. #: EWS061

SHEET: 1 OF 14

REV. 0

10/20/2026 1:03 PM
c:\users\julianarodriguez\building drops, inc\building drops landing - documents\common\projects\euro-wall, llc\fbc-26-0943 - euro-wall ms - multi-slide door - nafs\dwgs\ews061.dwg

10/20/2026 1:03 PM
c:\users\julianarodrigue1\building drops, inc\building drops landing - documents\common\projects\euro-wall. llc\fbc-26-0943 - euro-wall ms - multi-slide door - nafs\dwgs\ews061.dwg

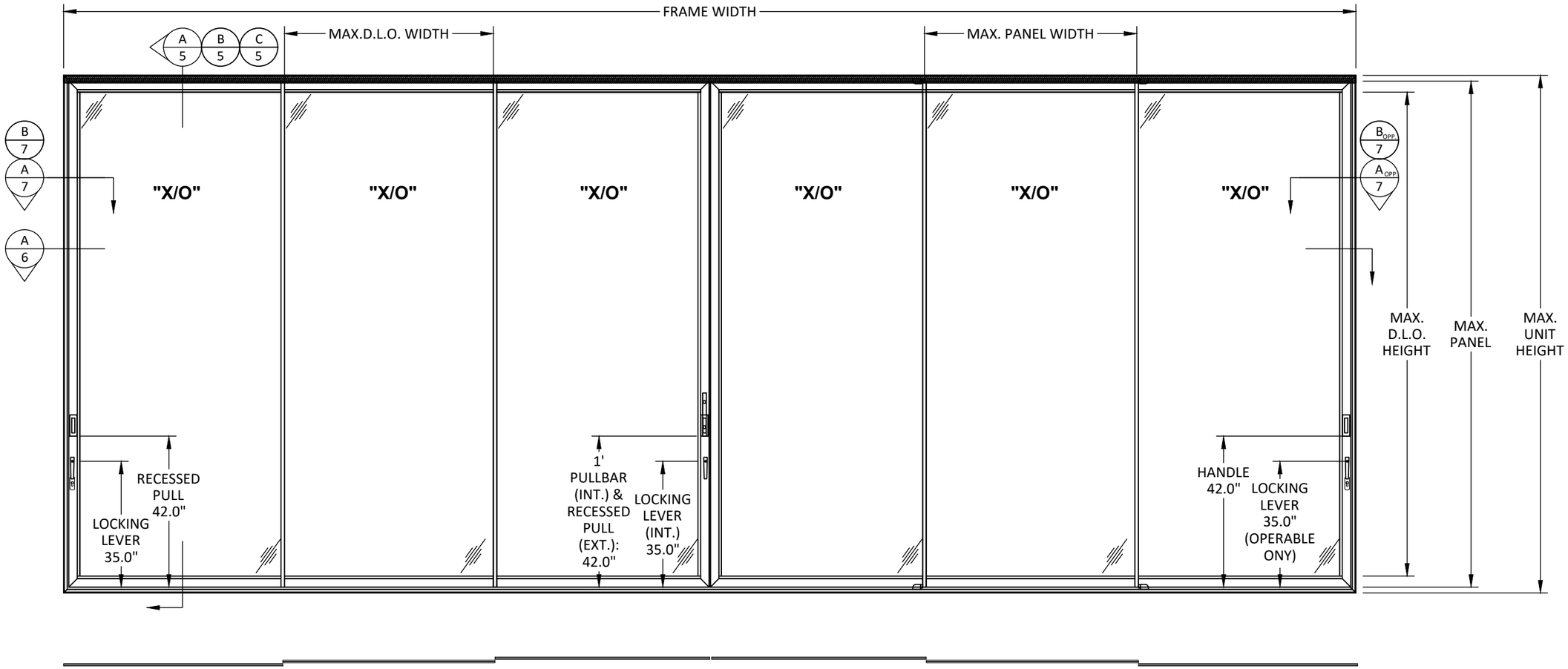

TYPICAL ELEVATION

SLIDING GLASS DOOR

*NOTES:
- SEE SHEET 4 FOR QUALIFIED CONFIGURATIONS.
- FRAME WIDTH = (NUMBER OF PANELS)*(PANELS WIDTH)
- MAX. D.L.O. WIDTH = PANEL WIDTH - 1.900"
- MAX. D.L.O. HEIGHT = PANEL HEIGHT - 6.100"
- MAX. OF 4 PANELS CONNECTED TO CORNER UNIT ON EACH SIDE.

QUALIFIED 90 DEGREE OUTSIDE CORNER UNIT

*SEE SHEET 4 FOR QUALIFIED CORNER UNIT SIZE AND RESPECTIVE DESIGN PRESSURES.

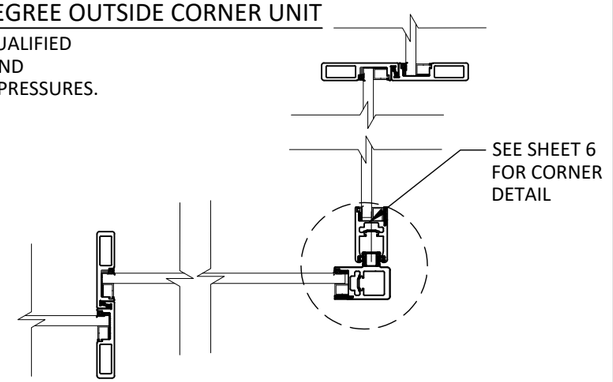

euro-wall
SUPERIOR BY DESIGN

EURO-WALL, LLC
P.O. BOX 8007,
NORTH PORT, FL 34290
PH: 888-989-3876

TITLE: MS MULTI-SLIDE SYSTEM (NON-HVHZ) (NON-IMPACT)
ELEVATION

PREPARED BY:
BUILDING DROPS, INC.
1900 NE MIAMI COURT, SUITE 2-15
MIAMI, FL 33132
PH: (954) 399-8478
FAX: (954) 744-4738
WEB: www.buildingdrops.com

REMARKS	BY	DATE

THE INSTALLATION DETAILS DESCRIBED HEREIN ARE GENERIC AND MAY NOT REFLECT ACTUAL CONDITIONS FOR A SPECIFIC SITE. IF SITE CONDITIONS CAUSE INSTALLATION TO DEVIATE FROM THE REQUIREMENTS DETAILED HEREIN, A LICENSED ENGINEER OR ARCHITECT SHALL PREPARE SITE SPECIFIC DOCUMENTS FOR USE WITH THIS DOCUMENT.

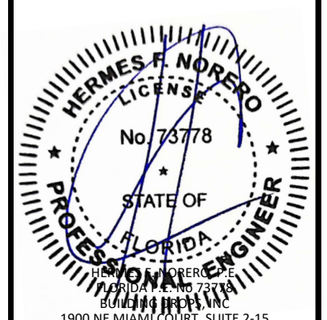

HERMES F. NORERO, P.E.
FLORIDA P.E. No. 73778
BUILDING DROPS, INC
1900 NE MIAMI COURT, SUITE 2-15
MIAMI, FL 33132
FBPE CERT. OF AUTHORIZATION No. 29578

FL #: FL48363

DATE: 10.01.2026

DWG. BY:	CHK. BY:
JR	HFN

SCALE: NTS

DWG. #: EWS061

SHEET: 2 OF 14

REV. 0

10/20/2026 1:03 PM

c:\Users\julianarodriguez\building drops, inc\building drops landing - documents\common\projects\euro-wall_llc\fbc-26-0943 - euro-wall ms - multi-slide door - nafs\dwgs\ews061.dwg

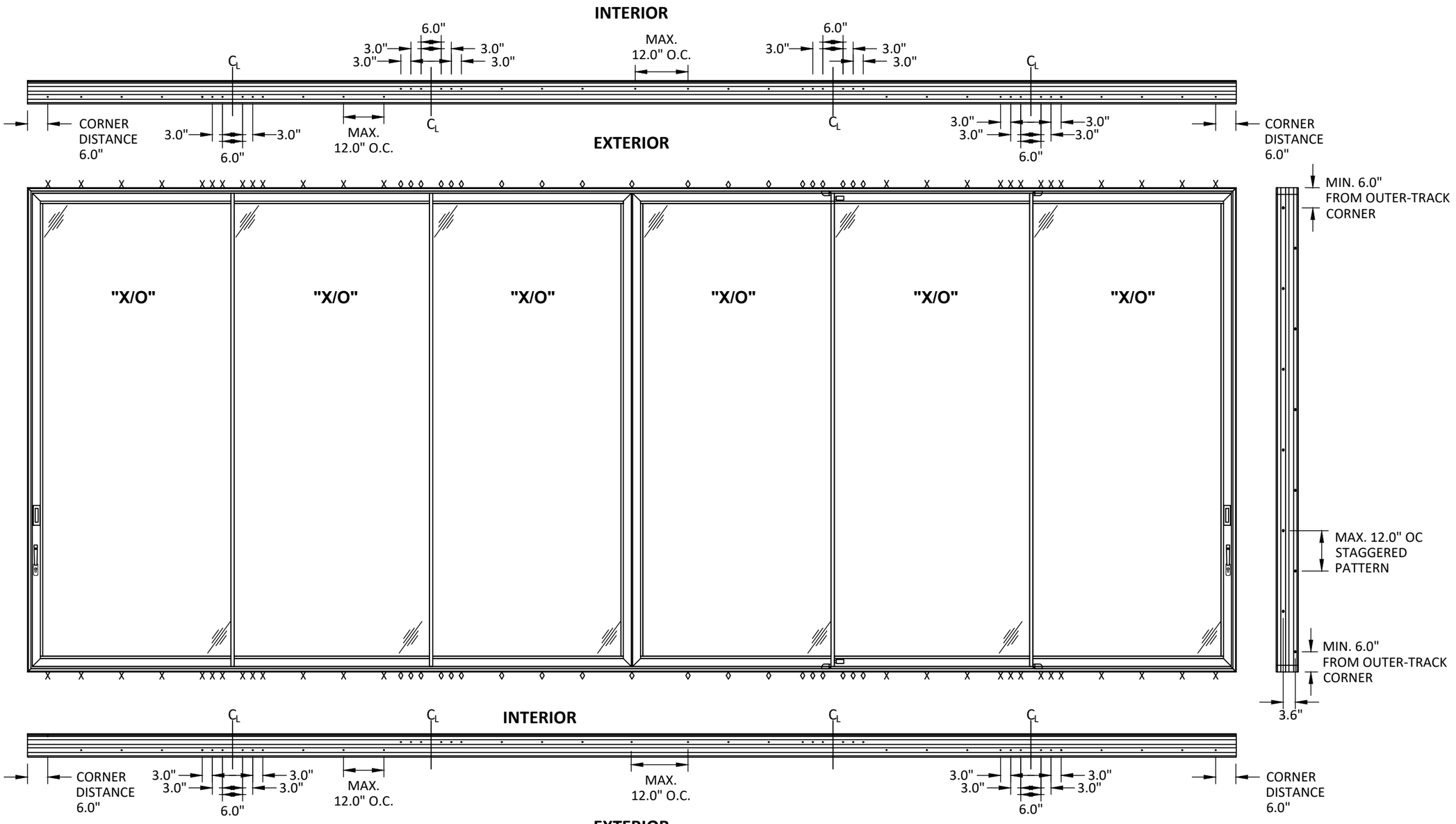

x =ANCHORS LOCATED ON THE EXTERIOR TRACK
◊ =ANCHORS LOCATED ON THE INTERIOR TRACK

ANCHOR LAYOUT

SLIDING GLASS DOOR

POCKET INSTALLATION NOTES:
1) ANCHORS FROM WALL BRACKET AND FROM HOOK STRIP TO BRACKET SHALL BE PLACED AT 4" MAX. FROM THE CORNERS AND 12" MAX. O.C.
2) WHEN POCKET IS USED, JAMB INSTALLATION ANCHORS SHALL BE INSTALLED AT 6" MAX. FROM THE CORNERS AND 36" MAX. O.C.

ANCHOR PATTERN FOR 2 TRACKS
(HEAD/SILL AND JAMBS)

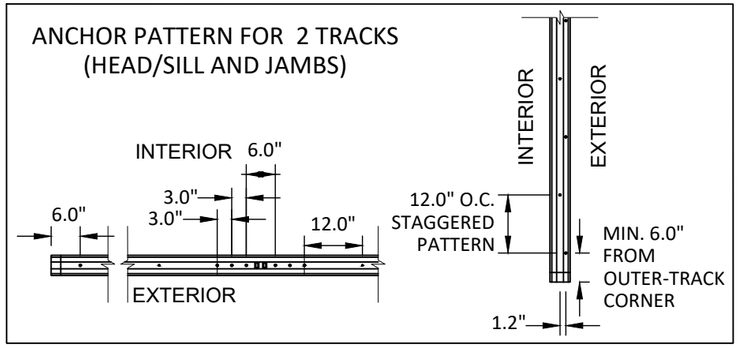

euro-wall
SUPERIOR BY DESIGN

EURO-WALL, LLC
P.O. BOX 8007,
NORTH PORT, FL 34290
PH: 888-989-3876

TITLE: MS MULTI-SLIDE SYSTEM (NON-HVHZ) (NON-IMPACT)
ANCHOR LAYOUT

PREPARED BY:
BUILDING DROPS, INC.
1900 NE MIAMI COURT, SUITE 2-15
MIAMI, FL 33132
PH: (954) 399-8478
FAX: (954) 744-4738
WEB: www.buildingdrops.com

REMARKS	BY	DATE

THE INSTALLATION DETAILS DESCRIBED HEREIN ARE GENERIC AND MAY NOT REFLECT ACTUAL CONDITIONS FOR A SPECIFIC SITE. IF SITE CONDITIONS CAUSE INSTALLATION TO DEVIATE FROM THE REQUIREMENTS DETAILED HEREIN, A LICENSED ENGINEER OR ARCHITECT SHALL PREPARE SITE SPECIFIC DOCUMENTS FOR USE WITH THIS DOCUMENT.

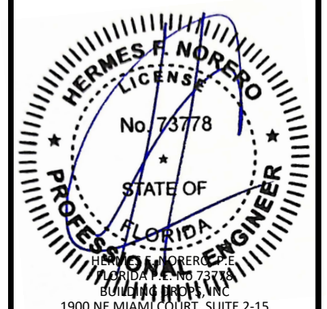

HERMES F. NORERO, P.E.
FLORIDA P.E. No 73778
BUILDING DROPS, INC
1900 NE MIAMI COURT, SUITE 2-15
MIAMI, FL 33132
FBPE CERT. OF AUTHORIZATION No. 29578

FL #: FL48363

DATE: 10.01.2026

DWG. BY:	CHK. BY:
JR	HFN

SCALE: NTS

DWG. #: EWS061

SHEET: 3 OF 14

REV. 0

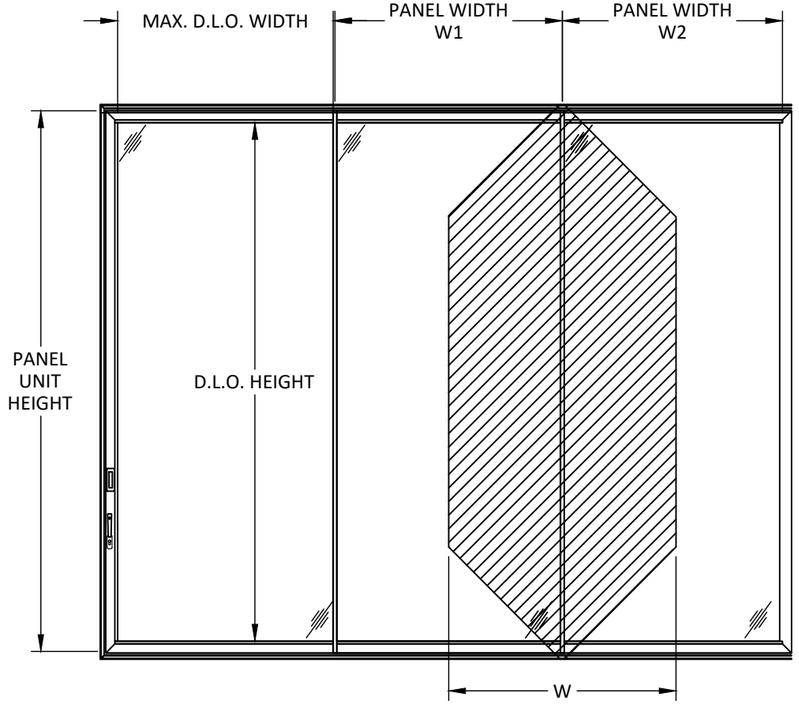

TRIBUTARY WIDTH(W) = (W1+W2)/2

- APPROVED CONFIGURATIONS:
  2 PANEL - OX, XO, XX
  3 PANEL - OOX, XOO, XOX, OXO, XXO, OXX, XXX
  4 PANEL - OXXO, OXXX, XXXO, XXOO, XOOX, OOXX, XXXX
  5 PANEL - XXOOO, OOOXX, XXXXX, OXXXX, XXXXO
  6 PANEL - OXXXXO, OXXXXP, XXXXXX, XXXOOO, OOOXXX, OOXXOOO, XOOOOX, XXXXXO, OXXXXX,XXXXXX
  7 PANEL - XXXXXXX, OXXXXXX, XXXXXXO, OXXXXXO
  8 PANEL - OXXXXXXO, OXXXXXXX, XXXXXXXO, XXXXXXXX
- POCKETS ARE QUALIFIED ON ANY CONFIGURATION.
- POCKETS ARE QUALIFIED FOR INSTALLATION ON EITHER SIDE OF THE SYSTEM. POCKETS ARE QUALIFIED TO BE USED ON BOTH SIDE AT THE SAME TIME.

NOTE:
MAXIMUM OF 4 PANEL CONNECTED TO CORNER UNIT ON EACH SIDE.

DESIGN PRESSURE TABLE (PSF)

PANEL HEIGHT (INCHES) \ TRIBUTARY WIDTH (INCHES)	45	48	51	54	57	60	63	66	69	72	75	78	81	84
90	50.0	50.0	50.0	50.0	50.0	50.0	50.0	50.0	50.0	50.0	50.0	50.0	50.0	50.0
96	50.0	50.0	50.0	50.0	50.0	50.0	50.0	50.0	50.0	50.0	50.0	50.0	50.0	50.0
102	50.0	50.0	50.0	50.0	50.0	50.0	50.0	50.0	50.0	50.0	50.0	50.0	50.0	50.0
108	50.0	50.0	50.0	50.0	50.0	50.0	50.0	50.0	50.0	50.0	50.0	50.0	-	-
114	50.0	50.0	50.0	50.0	50.0	50.0	50.0	50.0	50.0	50.0	50.0	-	-	-
120	50.0	50.0	50.0	50.0	50.0	50.0	50.0	50.0	50.0	50.0	-	-	-	-
126	50.0	50.0	50.0	50.0	50.0	50.0	50.0	50.0	-	-	-	-	-	-
132	50.0	50.0	50.0	50.0	50.0	50.0	50.0	-	-	-	-	-	-	-
138	50.0	50.0	50.0	50.0	50.0	50.0	-	-	-	-	-	-	-	-
144	50.0	50.0	50.0	50.0	50.0	50.0	-	-	-	-	-	-	-	-
150	50.0	50.0	50.0	48.3	46.0	-	-	-	-	-	-	-	-	-
156	50.0	47.6	45.0	42.7	-	-	-	-	-	-	-	-	-	-
162	45.0	42.4	40.1	-	-	-	-	-	-	-	-	-	-	-
168	40.3	37.9	35.8	-	-	-	-	-	-	-	-	-	-	-

euro-wall
SUPERIOR BY DESIGN

EURO-WALL, LLC
P.O. BOX 8007,
NORTH PORT, FL 34290
PH: 888-989-3876

TITLE: MS MULTI-SLIDE SYSTEM (NON-HVHZ) (NON-IMPACT)

DESIGN PRESSURE TABLE

PREPARED BY:
BUILDING DROPS, INC.
1900 NE MIAMI COURT, SUITE 2-15
MIAMI, FL 33132
PH: (954) 399-8478
FAX: (954) 744-4738
WEB: www.buildingdrops.com

REMARKS	BY	DATE

THE INSTALLATION DETAILS DESCRIBED HEREIN ARE GENERIC AND MAY NOT REFLECT ACTUAL CONDITIONS FOR A SPECIFIC SITE. IF SITE CONDITIONS CAUSE INSTALLATION TO DEVIATE FROM THE REQUIREMENTS DETAILED HEREIN, A LICENSED ENGINEER OR ARCHITECT SHALL PREPARE SITE SPECIFIC DOCUMENTS FOR USE WITH THIS DOCUMENT.

HERMES F. NORERO LICENSE No. 73778 STATE OF FLORIDA PROFESSIONAL ENGINEER

HERMES F. NORERO, P.E.
FLORIDA P.E. NO. 73778
BUILDING DROPS, INC
1900 NE MIAMI COURT, SUITE 2-15
MIAMI, FL 33132
FBPE CERT. OF AUTHORIZATION No. 29578

FL #: FL48363

DATE: 10.01.2026

DWG. BY: JR | CHK. BY: HFN

SCALE: NTS

DWG. #: EWS061

SHEET: 4 OF 14

REV. 0

10/20/2026 1:03 PM
c:\users\julianarodriguez\building drops, inc\building drops landing - documents\common\projects\euro-wall, llc\fbc-26-0943 - euro-wall ms - multi-slide door - nafs\dwgs\ews061.dwg

10/20/2026 1:03 PM
c:\Users\julianarodriguez\building drops, inc\building drops landing - documents\common\projects\euro-wall, llc\fbc-26-0943 - euro-wall ms - multi-slide door - nafs\dwgs\ews061.dwg

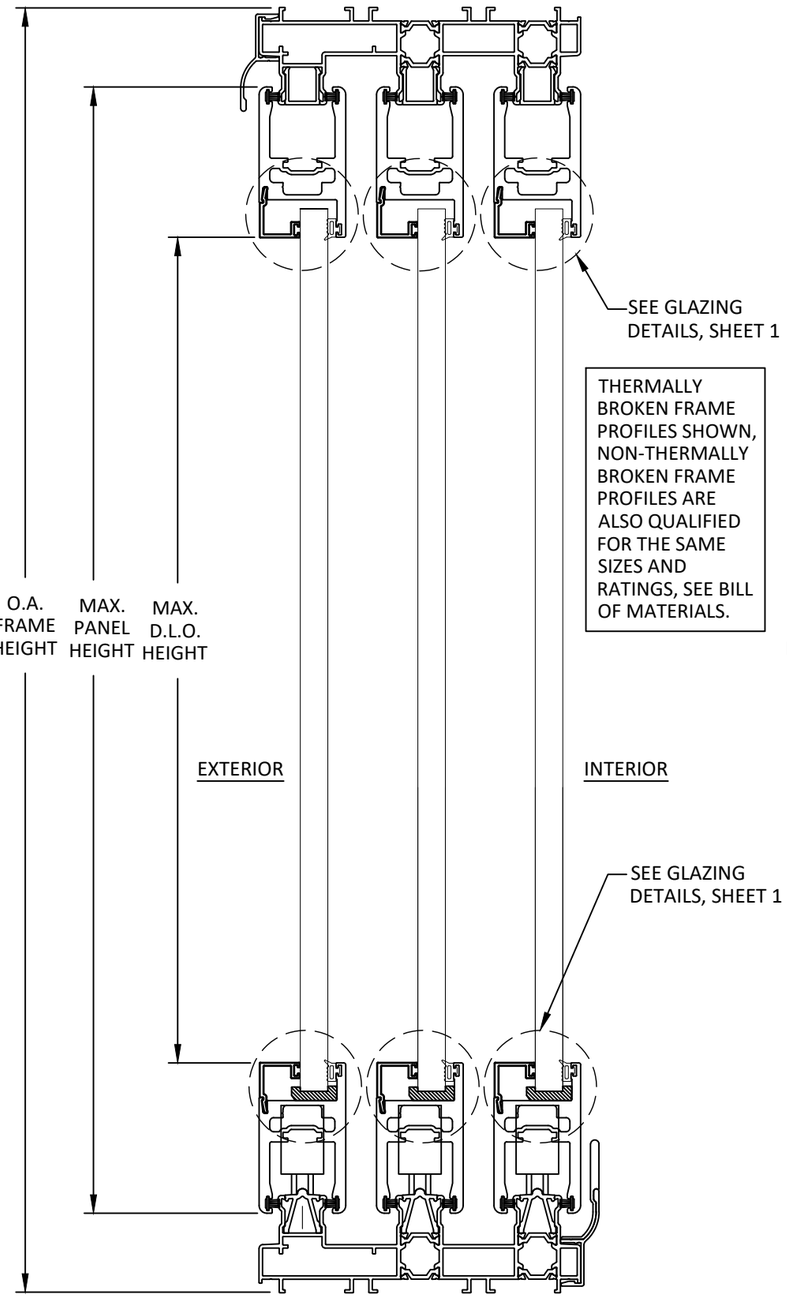

THERMALLY BROKEN FRAME PROFILES SHOWN, NON-THERMALLY BROKEN FRAME PROFILES ARE ALSO QUALIFIED FOR THE SAME SIZES AND RATINGS, SEE BILL OF MATERIALS.

*SILL RISERS ARE OPTIONAL.

A/5 VERTICAL SECTION
SLIDING GLASS DOOR
3 TRACK

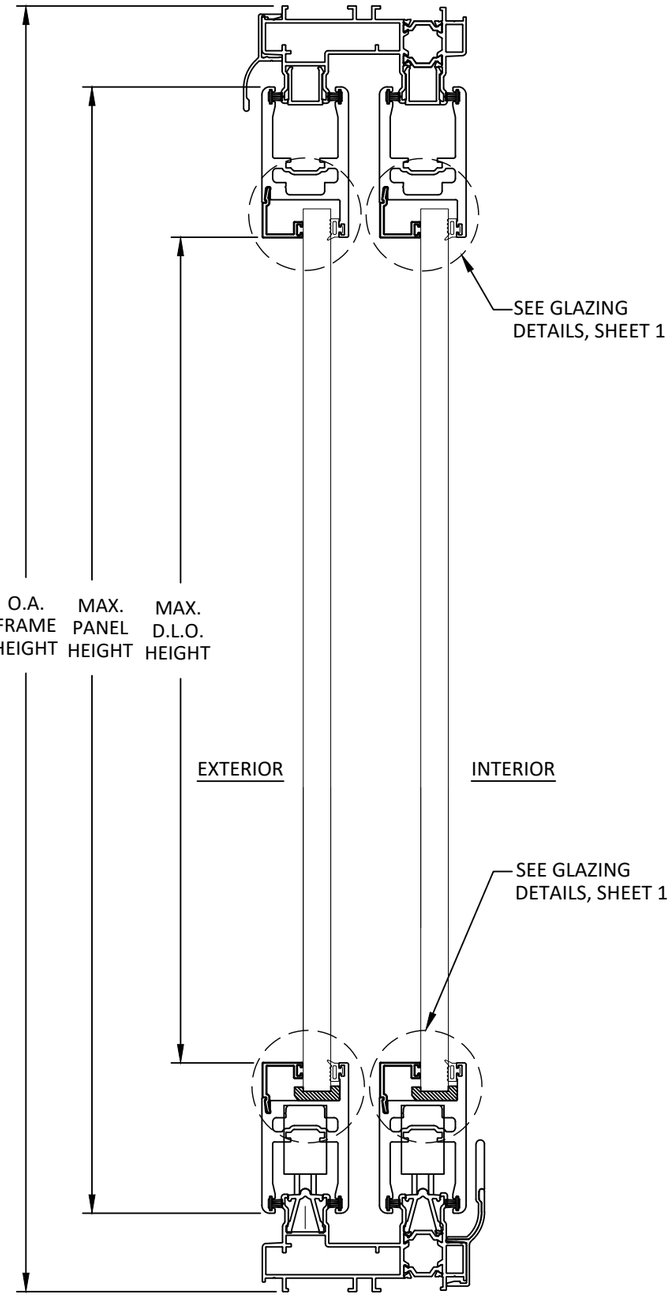

B/5 VERTICAL SECTION
SLIDING GLASS DOOR
2 TRACK

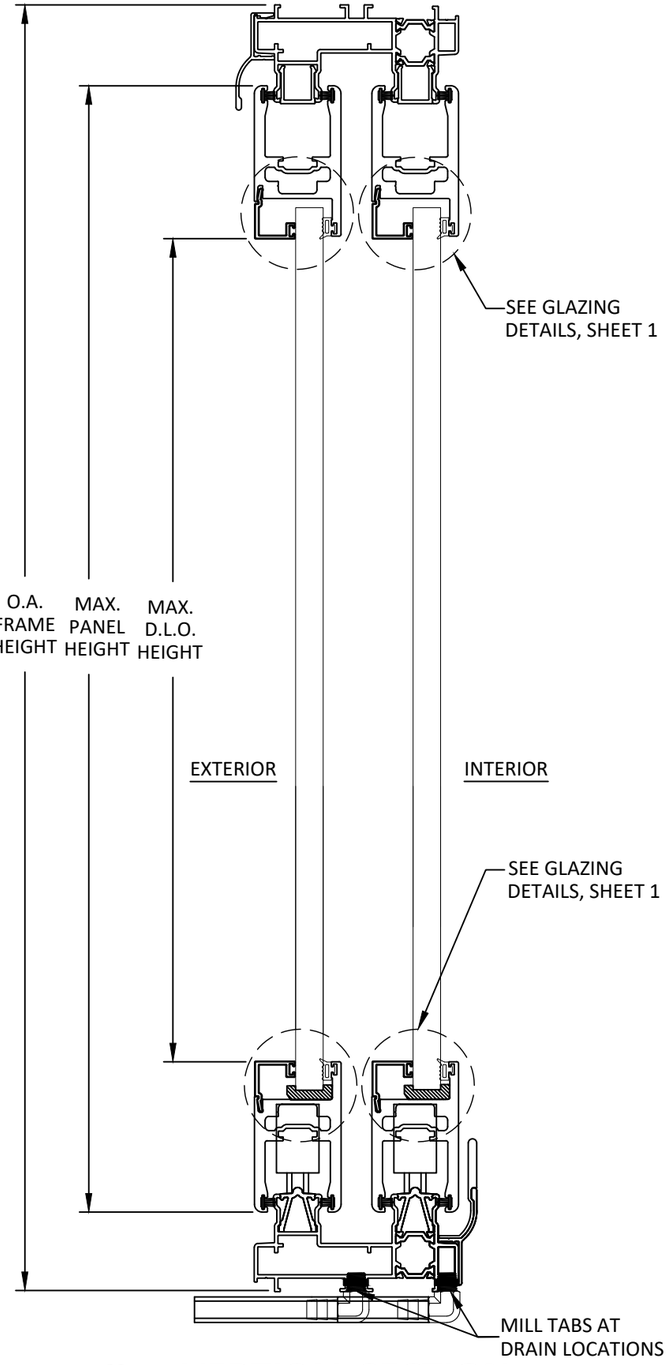

C/5 VERTICAL SECTION
SLIDING GLASS DOOR
OPTIONAL SUNKEN SILL
2 TRACK SHOWN, 3 TRACK QUALIFIED

euro-wall
SUPERIOR BY DESIGN

EURO-WALL, LLC
P.O. BOX 8007,
NORTH PORT, FL 34290
PH: 888-989-3876

TITLE: MS MULTI-SLIDE SYSTEM (NON-HVHZ) (NON-IMPACT)
VERTICAL SECTIONS

PREPARED BY:
BUILDING DROPS, INC.
1900 NE MIAMI COURT, SUITE 2-15
MIAMI, FL 33132
PH: (954) 399-8478
FAX: (954) 744-4738
WEB: www.buildingdrops.com

REMARKS	BY	DATE

THE INSTALLATION DETAILS DESCRIBED HEREIN ARE GENERIC AND MAY NOT REFLECT ACTUAL CONDITIONS FOR A SPECIFIC SITE. IF SITE CONDITIONS CAUSE INSTALLATION TO DEVIATE FROM THE REQUIREMENTS DETAILED HEREIN, A LICENSED ENGINEER OR ARCHITECT SHALL PREPARE SITE SPECIFIC DOCUMENTS FOR USE WITH THIS DOCUMENT.

HERMES F. NORERO LICENSE No. 73778 STATE OF FLORIDA PROFESSIONAL ENGINEER

HERMES F. NORERO, P.E.
FLORIDA P.E. NO. 73778
BUILDING DROPS, INC.
1900 NE MIAMI COURT, SUITE 2-15
MIAMI, FL 33132
FBPE CERT. OF AUTHORIZATION No. 29578

FL #: FL48363

DATE: 10.01.2026

DWG. BY: JR | CHK. BY: HFN

SCALE: NTS

DWG. #: EWS061

SHEET: 5 | REV. 0

10/20/2026 1:03 PM
c:\users\julianarodriguez\building drops, inc\building drops landing - documents\common\projects\euro-wall, llc\fbc-26-0943 - euro-wall ms - multi-slide door - nafs\dwgs\ews061.dwg

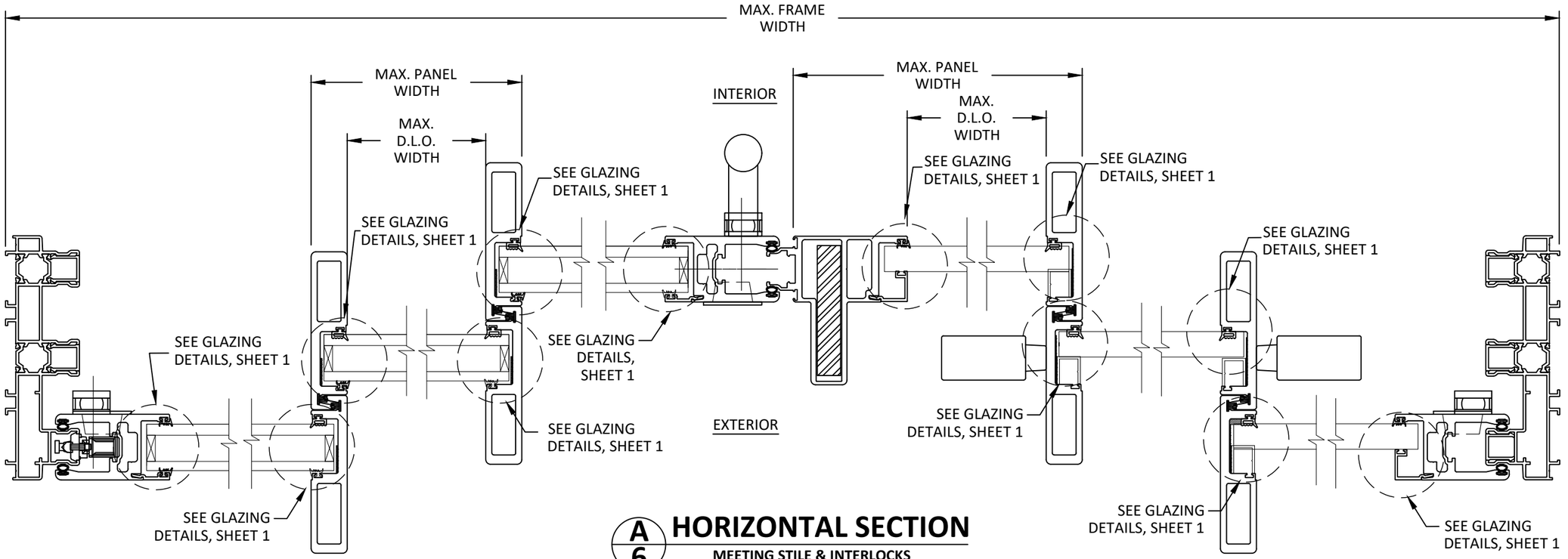

A/6 HORIZONTAL SECTION

MEETING STILE & INTERLOCKS
2 OR 3 TRACK

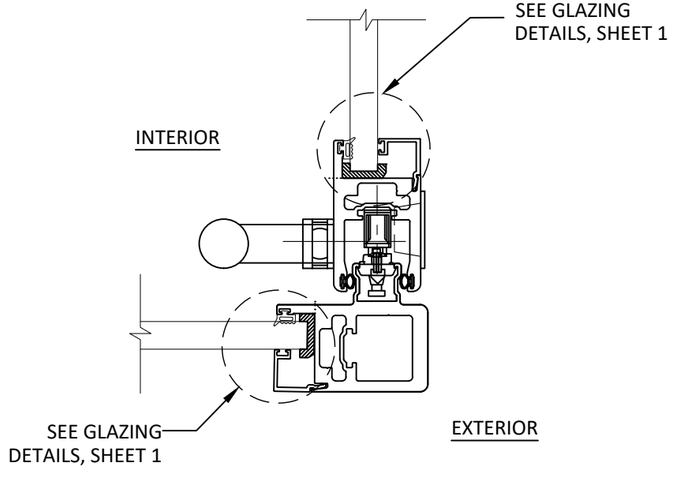

B/6 HORIZONTAL SECTION

OUTSIDE CORNER DETAIL

THERMALLY BROKEN FRAME PROFILES SHOWN, NON-THERMALLY BROKEN FRAME PROFILES ARE ALSO QUALIFIED FOR THE SAME SIZES AND RATINGS, SEE BILL OF MATERIALS.

euro-wall
SUPERIOR BY DESIGN

EURO-WALL, LLC
P.O. BOX 8007,
NORTH PORT, FL 34290
PH: 888-989-3876

TITLE: MS MULTI-SLIDE SYSTEM (NON-HVHZ) (NON-IMPACT)
HORIZONTAL SECTIONS

PREPARED BY:
BUILDING DROPS, INC.
1900 NE MIAMI COURT, SUITE 2-15
MIAMI, FL 33132
PH: (954) 399-8478
FAX: (954) 744-4738
WEB: www.buildingdrops.com

REMARKS	BY	DATE

THE INSTALLATION DETAILS DESCRIBED HEREIN ARE GENERIC AND MAY NOT REFLECT ACTUAL CONDITIONS FOR A SPECIFIC SITE. IF SITE CONDITIONS CAUSE INSTALLATION TO DEVIATE FROM THE REQUIREMENTS DETAILED HEREIN, A LICENSED ENGINEER OR ARCHITECT SHALL PREPARE SITE SPECIFIC DOCUMENTS FOR USE WITH THIS DOCUMENT.

HERMES F. NORERO LICENSE No. 73778 STATE OF FLORIDA PROFESSIONAL ENGINEER

HERMES F. NORERO P.E.
FLORIDA LIC. No 73778
BUILDING DROPS, INC
1900 NE MIAMI COURT, SUITE 2-15
MIAMI, FL 33132
FBPE CERT. OF AUTHORIZATION No. 29578

FL #: FL48363

DATE: 10.01.2026

DWG. BY: JR | CHK. BY: HFN

SCALE: NTS

DWG. #: EWS061

SHEET: 6 | REV. 0

10/20/2026 1:03 PM

c:\users\julianarodriguez\building drops, inc\building drops landing - documents\common\projects\euro-wall, llc\fbc-26-0943 - euro-wall ms - multi-slide door - nafs\dwgs\ews061.dwg

INTERIOR

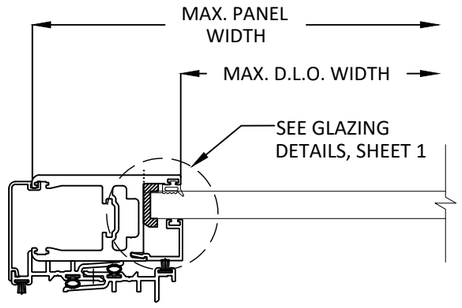

EXTERIOR

A/7 HORIZONTAL SECTION

INSIDE POCKET WALL

INTERIOR

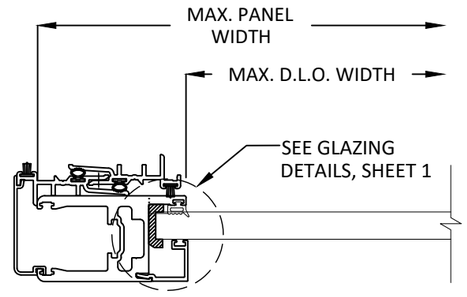

EXTERIOR

B/7 HORIZONTAL SECTION

OUTSIDE POCKET WALL

euro-wall
SUPERIOR BY DESIGN

EURO-WALL, LLC
P.O. BOX 8007,
NORTH PORT, FL 34290
PH: 888-989-3876

TITLE: MS MULTI-SLIDE SYSTEM (NON-HVHZ) (NON-IMPACT)

HORIZONTAL SECTIONS

PREPARED BY:
BUILDING DROPS, INC.
1900 NE MIAMI COURT, SUITE 2-15
MIAMI, FL 33132
PH: (954) 399-8478
FAX: (954) 744-4738
WEB: www.buildingdrops.com

REMARKS	BY	DATE

THE INSTALLATION DETAILS DESCRIBED HEREIN ARE GENERIC AND MAY NOT REFLECT ACTUAL CONDITIONS FOR A SPECIFIC SITE. IF SITE CONDITIONS CAUSE INSTALLATION TO DEVIATE FROM THE REQUIREMENTS DETAILED HEREIN, A LICENSED ENGINEER OR ARCHITECT SHALL PREPARE SITE SPECIFIC DOCUMENTS FOR USE WITH THIS DOCUMENT.

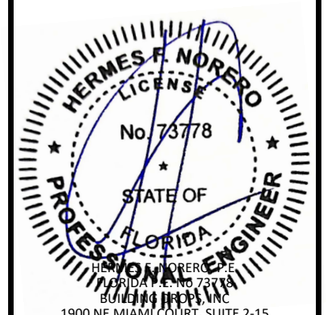

HERMES F. NORERO P.E.
FLORIDA P.E. No 73778
BUILDING DROPS, INC
1900 NE MIAMI COURT, SUITE 2-15
MIAMI, FL 33132
FBPE CERT. OF AUTHORIZATION No. 29578

FL #: FL48363

DATE: 10.01.2026

DWG. BY: JR | CHK. BY: HFN

SCALE: NTS

DWG. #: EWS061

SHEET: 7 OF 14

REV. 0

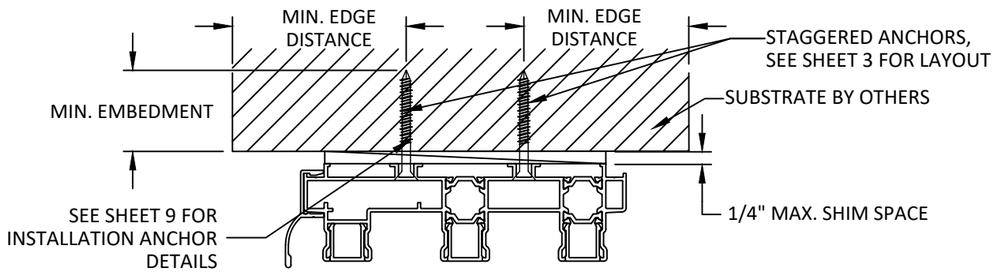

A/8 ANCHOR DETAIL

THROUGH FRAME INSTALLATION (HEAD)
3 TRACK

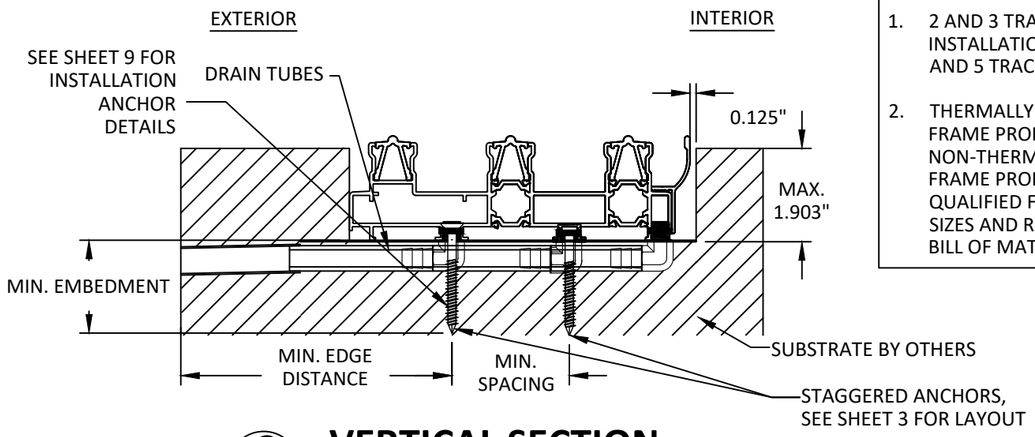

C/8 VERTICAL SECTION

THROUGH FRAME INSTALLATION (SILL)
OPTIONAL SUNKEN 3-TRACK INSTALLATION

NOTES:

1. 2 AND 3 TRACK FRAME INSTALLATION SHOWN, 4 AND 5 TRACK SIMILAR
2. THERMALLY BROKEN FRAME PROFILES SHOWN, NON-THERMALLY BROKEN FRAME PROFILES ARE ALSO QUALIFIED FOR THE SAME SIZES AND RATINGS, SEE BILL OF MATERIALS.

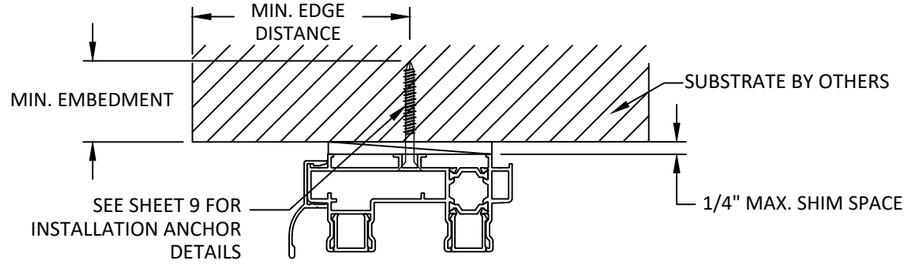

B/8 ANCHOR DETAIL

THROUGH FRAME INSTALLATION (HEAD)
2 TRACK

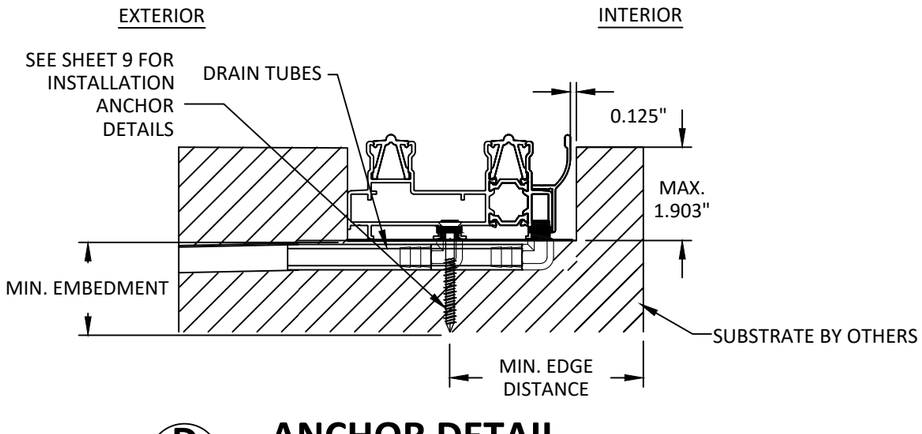

D/8 ANCHOR DETAIL

THROUGH FRAME INSTALLATION (SILL)
OPTIONAL SUNKEN 2-TRACK INSTALLATION

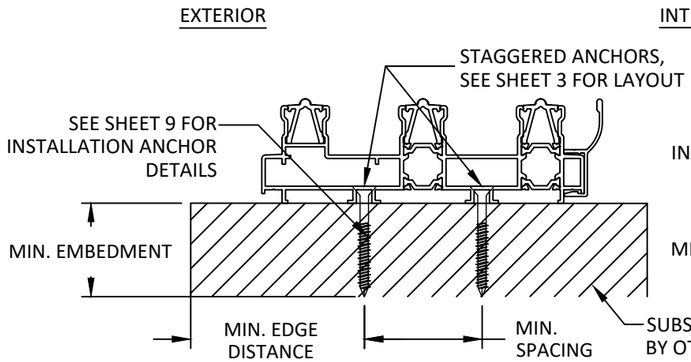

E/8 ANCHOR DETAIL

TRHOUGH FRAME INSTALLATION (SILL)
3 TRACK

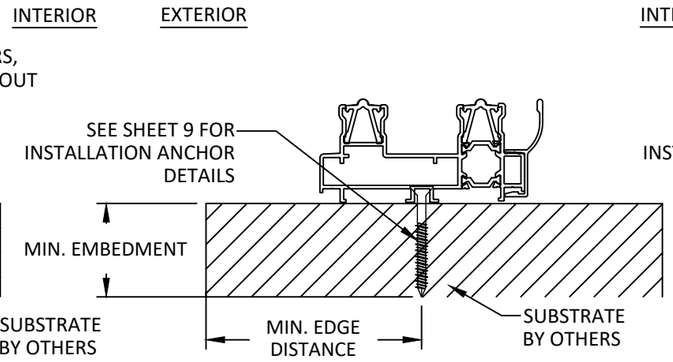

F/8 ANCHOR DETAIL

THROUGH FRAME INSTALLATION (SILL)
2 TRACK

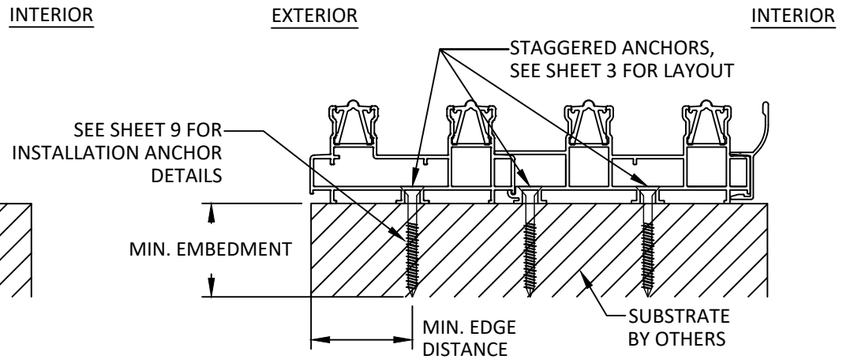

G/8 ANCHOR DETAIL

THROUGH FRAME INSTALLATION (SILL)
3 TRACK WITH EXTENSION

euro-wall
SUPERIOR BY DESIGN

EURO-WALL, LLC
P.O. BOX 8007,
NORTH PORT, FL 34290
PH: 888-989-3876

TITLE: MS MULTI-SLIDE SYSTEM (NON-HVHZ) (NON-IMPACT)
ANCHOR DETAILS

PREPARED BY:
BUILDING DROPS, INC.
1900 NE MIAMI COURT, SUITE 2-15
MIAMI, FL 33132
PH: (954) 399-8478
FAX: (954) 744-4738
WEB: www.buildingdrops.com

REMARKS	BY	DATE

THE INSTALLATION DETAILS DESCRIBED HEREIN ARE GENERIC AND MAY NOT REFLECT ACTUAL CONDITIONS FOR A SPECIFIC SITE. IF SITE CONDITIONS CAUSE INSTALLATION TO DEVIATE FROM THE REQUIREMENTS DETAILED HEREIN, A LICENSED ENGINEER OR ARCHITECT SHALL PREPARE SITE SPECIFIC DOCUMENTS FOR USE WITH THIS DOCUMENT.

HERMES F. NORERO LICENSE No. 73778 STATE OF FLORIDA PROFESSIONAL ENGINEER

HERMES F. NORERO P.E.
FLORIDA P.E. No. 73778
BUILDING DROPS, INC
1900 NE MIAMI COURT, SUITE 2-15
MIAMI, FL 33132
FBPE CERT. OF AUTHORIZATION No. 29578

FL #: FL48363

DATE: 10.01.2026

DWG. BY: JR | CHK. BY: HFN

SCALE: NTS

DWG. #: EWS061

SHEET: 8 | REV. 0

OF 14

10/20/2026 1:03 PM
c:\users\julianarodrigue1\building drops, inc\building drops landing - documents\common\projects\euro-wall, llc\fbc-26-0943 - euro-wall ms - multi-slide door - nafs\dwgs\ews061.dwg

10/20/2026 1:03 PM
c:\users\julianarodriguez\building drops, inc\building drops landing - documents\common\projects\euro-wall, llc\fbc-26-0943 - euro-wall ms - multi-slide door - nafs\dwgs\ews061.dwg

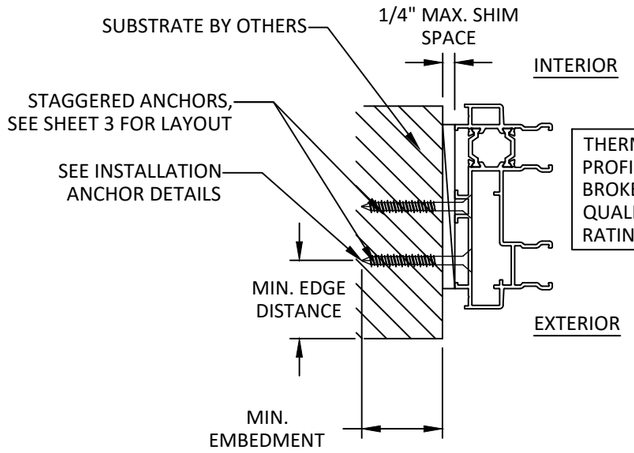

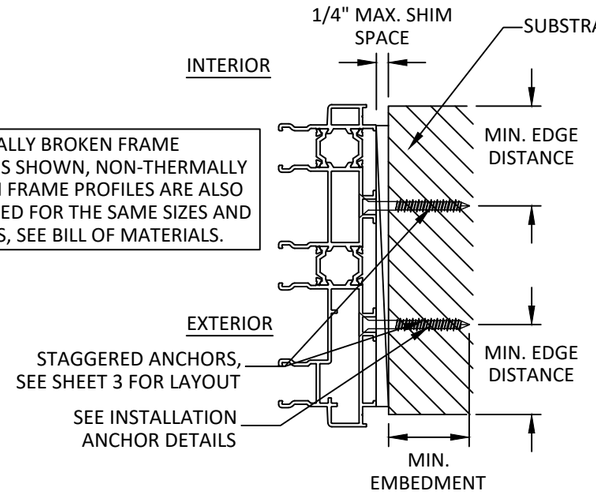

THERMALLY BROKEN FRAME PROFILES SHOWN, NON-THERMALLY BROKEN FRAME PROFILES ARE ALSO QUALIFIED FOR THE SAME SIZES AND RATINGS, SEE BILL OF MATERIALS.

ANCHOR FOR WALL BRACKET AND FROM HOOK STRIP TO BRACKET TO BE LOCATED AT 4" MAX. FROM CORNERS AND 12" MAX. O.C. SPACING

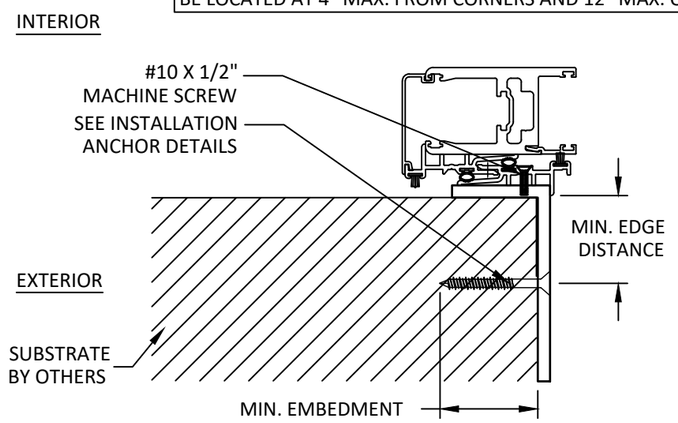

A/9 ANCHOR DETAIL
THROUGH FRAME (JAMB)
2 TRACK

B/9 ANCHOR DETAIL
THROUGH FRAME (JAMB)
3 TRACK

C/9 ANCHOR DETAIL
INSIDE POCKET BRACKET INSTALLATION

INSTALLATION NOTES:

1. ONE (1) INSTALLATION ANCHOR IS REQUIRED AT EACH ANCHOR LOCATION SHOWN UNLESS SPECIFIED IN THE ANCHOR SCHEDULE.
2. THE NUMBER OF INSTALLATION ANCHORS DEPICTED IS THE MINIMUM NUMBER OF ANCHORS TO BE USED FOR PRODUCT INSTALLATION OF THE MAXIMUM SIZE LISTED.
3. INSTALL INDIVIDUAL INSTALLATION ANCHORS WITHIN A TOLERANCE OF ±1/2 INCH THE DEPICTED LOCATION & SPACING IN THE ANCHOR LAYOUT DETAILS (I.E., WITHOUT CONSIDERATION OF TOLERANCES). TOLERANCES ARE NOT CUMULATIVE FROM ONE INSTALLATION ANCHOR TO THE NEXT.
4. SHIM AS REQUIRED AT EACH INSTALLATION ANCHOR WITH LOAD BEARING SHIM(S). MAXIMUM ALLOWABLE SHIM STACK TO BE 1/4 INCH. SHIM WHERE SPACE OF 1/16 INCH OR GREATER OCCURS. SHIM(S) SHALL BE CONSTRUCTED OF HIGH DENSITY PLASTIC OR BETTER.
5. FOR MASONRY OR CONCRETE OPENINGS, 1X WOOD BUCK MAY BE USED (OPTIONAL AS LONG AS THE MINIMUM EMBEDMENT AND EDGE DISTANCE REQUIREMENTS ARE STILL MET WITHIN THE CORRESPONDING HOST SUBSTRATE.) SEE GENERAL NOTE #3 ON SHEET 1 FOR MORE INFORMATION.
6. MINIMUM EMBEDMENT AND EDGE DISTANCE EXCLUDE WALL FINISHES, INCLUDING BUT NOT LIMITED TO STUCCO, FOAM, BRICK VENEER, AND SIDING.
7. INSTALLATION ANCHORS AND ASSOCIATED HARDWARE MUST BE MADE OF CORROSION RESISTANT MATERIAL OR HAVE A CORROSION RESISTANT COATING.
   - 7.1. FASTENERS USED WITHIN 3,000 FEET OF A SALTWATER COASTLINE AND INSTALLED IN ENCLOSED SPACES SHALL BE GALVANIZED IN ACCORDANCE WITH SECTION 1711.1.1 (E.G., ASTM A153 CLASS D, ASTM A641 CLASS 3S, OR EQUIVALENT CORROSION RESISTANCE).
   - 7.2. CONNECTORS AND METAL PLATES USED WITHIN 3,000 FEET OF A SALTWATER COASTLINE SHALL BE STANDARD GALVANIZED IN ACCORDANCE WITH SECTION 1711.1.2 (E.G., ASTM A653 G90, ASTM A123, OR PROTECTIVE COATING PER TPI 1).
8. FOR HOLLOW BLOCK AND GROUT FILLED BLOCK, DO NOT INSTALL INSTALLATION ANCHORS INTO MORTAR JOINTS. EDGE DISTANCE IS MEASURED FROM FREE EDGE OF BLOCK OR EDGE OF MORTAR JOINT INTO FACE SHELL OF BLOCK.
9. INSTALLATION ANCHORS SHALL BE INSTALLED IN ACCORDANCE WITH ANCHOR MANUFACTURER'S INSTALLATION INSTRUCTIONS, AND ANCHORS SHALL NOT BE USED IN SUBSTRATES WITH STRENGTHS LESS THAN THE MINIMUM STRENGTH SPECIFIED BY THE ANCHOR MANUFACTURER.

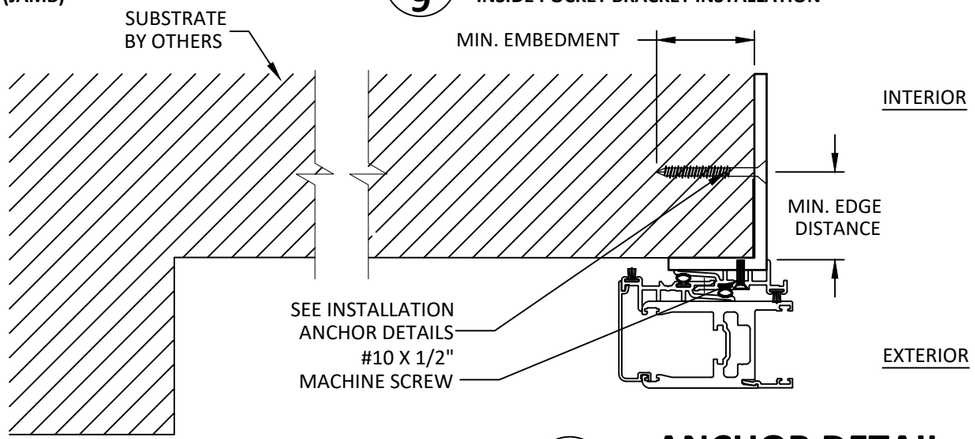

NOTE: OUTSIDE POCKET CONDITION SHALL BE OPEN TO THE EXTERIOR. OUTSIDE POCKET SHALL NOT BE ENCLOSED. POCKET CONSTRUCTION DETAILS BY OTHERS.

D/9 ANCHOR DETAIL
OUTSIDE POCKET BRACKET INSTALLATION

ANCHOR SCHEDULE

METHOD	SUBSTRATE	ANCHOR TYPE	MIN EMBEDMENT	MIN. EDGE DISTANCE	MIN. SPACING
THROUGH FRAME	WOOD: MIN. SG = 0.55	#14 WOOD SCREW	1.5"	0.75"	2.50"
	METAL: 18 GAUGE STEEL, MIN. Fy = 33KSI	#12 SELF DRILLING OR SELF TAPPING SCREW	3 THREADS MIN PENETRATION BEYOND METAL	0.50"	
	METAL: 1/8" MIN. THICKNESS ALUMINUM MIN. 6063-T5				
	CONCRETE: f'c=3000PSI	1/4" ITW TAPCON	1.25"	2.00"	
	MASONRY: CMU per ASTM C90				

euro-wall
SUPERIOR BY DESIGN
EURO-WALL, LLC
P.O. BOX 8007,
NORTH PORT, FL 34290
PH: 888-989-3876

TITLE: MS MULTI-SLIDE SYSTEM (NON-HVHZ) (NON-IMPACT)
ANCHOR DETAILS, INSTALLATION NOTES, & ANCHOR SCHEDULE

PREPARED BY:
BUILDING DROPS, INC.
1900 NE MIAMI COURT, SUITE 2-15
MIAMI, FL 33132
PH: (954) 399-8478
FAX: (954) 744-4738
WEB: www.buildingdrops.com

REMARKS	BY	DATE

THE INSTALLATION DETAILS DESCRIBED HEREIN ARE GENERIC AND MAY NOT REFLECT ACTUAL CONDITIONS FOR A SPECIFIC SITE. IF SITE CONDITIONS CAUSE INSTALLATION TO DEVIATE FROM THE REQUIREMENTS DETAILED HEREIN, A LICENSED ENGINEER OR ARCHITECT SHALL PREPARE SITE SPECIFIC DOCUMENTS FOR USE WITH THIS DOCUMENT.

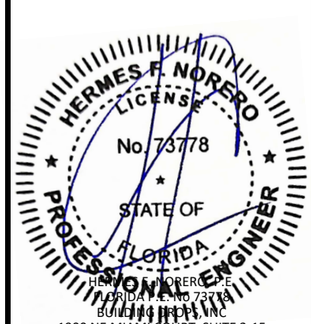

HERMES F. NORERO, P.E.
FLORIDA P.E. No. 73778
BUILDING DROPS, INC
1900 NE MIAMI COURT, SUITE 2-15
MIAMI, FL 33132
FBPE CERT. OF AUTHORIZATION No. 29578

FL #: FL48363
DATE: 10.01.2026
DWG. BY: JR
CHK. BY: HFN
SCALE: NTS
DWG. #: EWS061
SHEET: 9
REV. 0
OF 14

10/20/2026 1:03 PM

c:\users\julianarodriguez\building drops, inc\building drops landing - documents\common\projects\euro-wall, llc\fbc-26-0943 - euro-wall ms - multi-slide door - nafs\dwgs\ews061.dwg

BILL OF MATERIALS

NO	PART #	DESCRIPTION	MATERIAL
1	E0008	SASH	6063-T5
2	E0009	INTERLOCK	6063-T5
3	E0094	ASTRAGAL	6063-T5
4	E0097	0.625" X 3.50" STEEL REINFORCEMENT	STEEL
5	E0064	IG BEAD	6063-T5
6	E0065	INTERLOCK REDUCER	6063-T5
7	E0093	9/16" BOX BEAD	6063-T5
8	E0014	OUT-CORNER ASTRAGAL	6063-T5
9	E0124	IN-CORNER ASTRAGAL	6063-T5
10	E0011	POCKET INTERLOCK	6063-T5
11	E0039	POCKET END CAP	6063-T5
18	E0015	2-TRACK FRAME: THERMALLY BROKEN	6063-T5
19	E0016	3-TRACK FRAME: THERMALLY BROKEN	6063-T5
20	E0012	ROLLER TRACK	6063-T5
21	E0013	MS JAMB TRIM	6063-T5
22	E0018	4-TRACK FRAME: THERMALLY BROKEN	6063-T5
*23	E0019	5-TRACK FRAME: THERMALLY BROKEN	6063-T5
24	E0167	2-TRACK ADD-ON	6063-T5
25	E0117	2-TRACK FRAME: NON-THERMALLY BROKEN	6063-T5
26	E0118	3-TRACK FRAME: NON-THERMALLY BROKEN	6063-T5
27	E0109	INTERMEDIATE TRACK FILLER	6063-T5
28	E0040	CONDENSATION DRAIN / DRIP CAP	6063-T5
29	E0365	5/8" RISER ADD-ON	6063-T5
30	E0367	5/8" RISER	6063-T5
31	E0237	1.00" RISER ADD-ON	6063-T5
32	E0243	1.00" RISER	6063-T5
33	E0096	POCKET HOOK MOUNT	6063-T5
39	C0034	M4.2 X 13 MM DIN7982-A2 TYPE C	STAINLESS STEEL
40	C0037	#10 X 3/4" PHILLIPS PH TEK SCREW	STAINLESS STEEL
41	C0073	#10 X 1.00" PHILLIPS PH TEK SCREW	STAINLESS STEEL
42	C0045	1/4"-20 X 3/4" PHILLIPS FH MACHINE SCREW	STAINLESS STEEL
43	C0046	1/4"-20 X 1.00" PHILLIPS FH MACHINE SCREW	STAINLESS STEEL
49	C0383	DOWSIL995 STRUCTURAL SEALANT	SILICONE
50	C0423	100% SILICONE, NEUTRAL CURE	SILICONE
51	C0424	SIKAFLEX 221	POLYURETHANE
54	C0143	1.00" X 2.00" X 0.25" ADHESIVE SETTING BLOCK	NEOPRENE
55	C0144	1.00" X 2.00" X 0.125" ADHESIVE SETTING BLOCK	NEOPRENE
56	C0147	1.00" X 2.00" X 0.0625" ADHESIVE SETTING BLOCK	NEOPRENE
59	C0029	FRAME CORNER KEY	VARIES
60	C0033	1/2" HOLE PLUG	NYLON
61	C0035	FULL EMBED. WATER MANAGEMENT KIT	VARIES
62	C0036	3/8" FIN SEAL WEATHERSTRIP	POLYPROPYLENE
63	C0044	1/4" BULB GASKET	POLYPROPYLENE
64	C0056	9/16" BEDDING GASKET	EPDM
65	C0082	1-1/4" IG BEDDING GASKET	EPDM
66	C0048	ROLLER ASSEMBLY	VARIES
67	C0083	FIXED ROLLER ASSEMBLY	VARIES
68	C0061	LOCKING LEVER	STEEL
69	C0080	PANEL MITER CORNER KEY	VARIES
70	C0142	PANEL BLOCK CORNER KEY	6063-T5
71	C0081	LOCKING TRANSMISSION	ZAMAC
72	C0548	PAWL CATCH	ZAMAC
73	C0549	PAWL ASSEMBLY	ZAMAC, BRASS
74	C0171	POLYAMIDE CONNECTING ROD	GLASS FILLED NYLON
75	C0084	WEEP HOLE COVER	NYLON
76	C0026	HEADER WEATHERSTRIP HOLDER	NYLON
77	C0349	DRAIN HOLE COVER	NYLON
78	C0697	FRAME ALIGNMENT CORNER KEY	6063-T5
79	C0163	ASTRAGAL END CAP: FOR HOLLOW	NYLON
80	C0178	ASTRAGAL END CAP: FOR FIN CHANNEL	NYLON
81	C0345	ASTRAGAL BOTTOM D.L.O. GAP FILLER LEFT	NYLON
82	C0346	ASTRAGAL BOTTOM D.L.O. GAP FILLER RIGHT	NYLON
83	C0347	ASTRAGAL TOP D.L.O. GAP FILLER	NYLON
84	C0194	MITER STILE ALIGNMENT CORNER KEY	STAINLESS STEEL
85	C0315	VENTED HOLE COVER	NYLON
86	C0337	DRAIN INSERT	NYLON
87	C0042	LARGE DOOR BUMPER	NYLON
88	C0350	INTERLOCK END CAP	NYLON
89	C0032	E0040 END CAPS	NYLON
90	C0681	E0367 END CAPS	NYLON
91	C0682	E0243 END CAPS	NYLON
92	C0683	E0365 END CAPS	NYLON
93	C0684	E0237 END CAPS	NYLON
94	C0085	POCKET INTERLOCK END CAPS	NYLON
95	C0086	POCKET A COVER	NYLON
96	C0087	POCKET B COVER	NYLON
97	C0088	POCKET UPPER PLUG	LOW DENSITY FOAM
98	C0089	POCKET LOWER PLUG	LOW DENSITY FOAM
99	C0090	POCKET PLUG HOLDER WITH GUIDE	NYLON
100	C0338	POCKET COVER A: 1.00" RISER	NYLON
101	C0339	POCKET COVER B: 1.00" RISER	NYLON
102	C0340	POCKET INTERLOCK END CAP A: 1.00" RISER	NYLON
103	C0341	POCKET INTERLOCK END CAP B: 1.00" RISER	NYLON
104	C0342	POCKET FRAME GAP FILLER	NYLON

euro-wall
SUPERIOR BY DESIGN

EURO-WALL, LLC
P.O. BOX 8007,
NORTH PORT, FL 34290
PH: 888-989-3876

TITLE: MS MULTI-SLIDE SYSTEM (NON-HVHZ) (NON-IMPACT)

BILL OF MATERIALS

PREPARED BY:
BUILDING DROPS, INC.
1900 NE MIAMI COURT, SUITE 2-15
MIAMI, FL 33132
PH: (954) 399-8478
FAX: (954) 744-4738
WEB: www.buildingdrops.com

REMARKS	BY	DATE

THE INSTALLATION DETAILS DESCRIBED HEREIN ARE GENERIC AND MAY NOT REFLECT ACTUAL CONDITIONS FOR A SPECIFIC SITE. IF SITE CONDITIONS CAUSE INSTALLATION TO DEVIATE FROM THE REQUIREMENTS DETAILED HEREIN, A LICENSED ENGINEER OR ARCHITECT SHALL PREPARE SITE SPECIFIC DOCUMENTS FOR USE WITH THIS DOCUMENT.

HERMES F. NORERO LICENSE No. 73778 STATE OF FLORIDA PROFESSIONAL ENGINEER

HERMES F. NORERO P.E.
FLORIDA P.E. No. 73778
BUILDING DROPS, INC
1900 NE MIAMI COURT, SUITE 2-15
MIAMI, FL 33132
FBPE CERT. OF AUTHORIZATION No. 29578

FL #: FL48363

DATE: 10.01.2026

DWG. BY: JR | CHK. BY: HFN

SCALE: NTS

DWG. #: EWS061

SHEET: 10 OF 14

REV. 0

10/20/2026 1:03 PM

c:\users\julianarodriguez\building drops, inc\building drops landing - documents\common\projects\euro-wall, llc\fbc-26-0943 - euro-wall ms - multi-slide door - nafs\dwgs\ews061.dwg

1 SASH
6063-T5

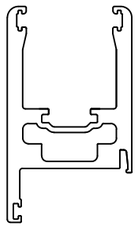

2 INTERLOCK
6063-T5

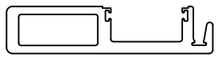

3 ASTRAGAL
6063-T5

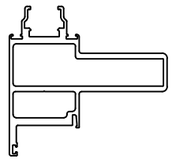

4 0.625" X 3.50" STEEL REINFORCEMENT
STEEL

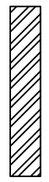

5 IG BEAD
6063-T5

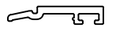

6 INTERLOCK REDUCER
6063-T5



7 9/16" BOX BEAD
6063-T5



8 OUT-CORNER ASTRAGAL
6063-T5

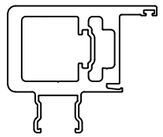

9 IN-CORNER ASTRAGAL
6063-T5

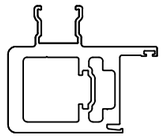

10 POCKET INTERLOCK
6063-T5

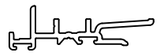

11 POCKET END CAP
6063-T5



18 2-TRACK FRAME: THERMALLY BROKEN
6063-T5

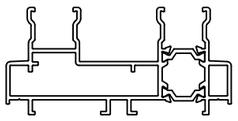

19 3-TRACK FRAME: THERMALLY BROKEN
6063-T5

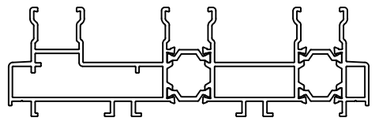

20 ROLLER TRACK
6063-T5



21 MS JAMB TRIM
6063-T5

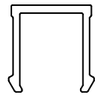

22 4-TRACK FRAME THERMALLY BROKEN
6063-T5

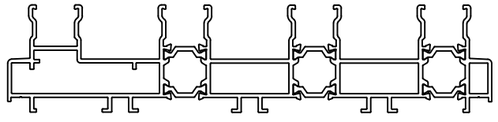

*23 5-TRACK FRAME THERMALLY BROKEN
6063-T5

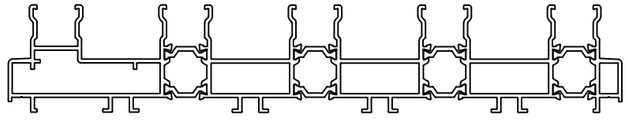

24 2-TRACK ADD ON
6063-T5

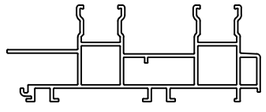

25 2-TRACK FRAME: NON-THERMALLY BROKEN
6063-T5

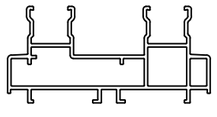

26 3-TRACK FRAME: NON-THERMALLY BROKEN
6063-T5

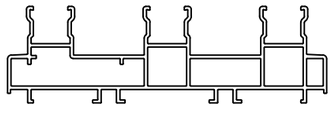

27 INTERMEDIATE TRACK FILLER
6063-T5



euro-wall
SUPERIOR BY DESIGN

EURO-WALL, LLC
P.O. BOX 8007,
NORTH PORT, FL 34290
PH: 888-989-3876

TITLE: MS MULTI-SLIDE SYSTEM (NON-HVHZ) (NON-IMPACT)
COMPONENTS

PREPARED BY:
BUILDING DROPS, INC.
1900 NE MIAMI COURT, SUITE 2-15
MIAMI, FL 33132
PH: (954) 399-8478
FAX: (954) 744-4738
WEB: www.buildingdrops.com

REMARKS	BY	DATE

THE INSTALLATION DETAILS DESCRIBED HEREIN ARE GENERIC AND MAY NOT REFLECT ACTUAL CONDITIONS FOR A SPECIFIC SITE. IF SITE CONDITIONS CAUSE INSTALLATION TO DEVIATE FROM THE REQUIREMENTS DETAILED HEREIN, A LICENSED ENGINEER OR ARCHITECT SHALL PREPARE SITE SPECIFIC DOCUMENTS FOR USE WITH THIS DOCUMENT.

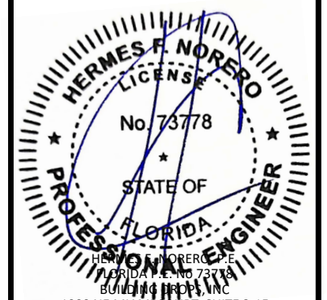

HERMES F. NORERO P.E.
FLORIDA P.E. No. 73778
BUILDING DROPS, INC
1900 NE MIAMI COURT, SUITE 2-15
MIAMI, FL 33132
FBPE CERT. OF AUTHORIZATION No. 29578

FL #: FL48363

DATE: 10.01.2026

DWG. BY: JR | CHK. BY: HFN

SCALE: NTS

DWG. #: EWS061

SHEET: 11 | REV. 0

10/20/2026 1:03 PM

c:\users\julianarodriguez\building drops, inc\building drops landing - documents\common\projects\euro-wall, llc\fbc-26-0943 - euro-wall ms - multi-slide door - nafs\dwgs\ews061.dwg

28 CONDENSATION DRAIN / DRIP CAP
6063-T5



29 5/8" RISER ADD-ON
6063-T5



30 5/8" RISER
6063-T5



31 1.00" RISER ADD-ON
6063-T5



32 1.00" RISER
6063-T5



33 POCKET HOOK MOUNT
6063-T5



59 FRAME CORNER KEY
VARIES

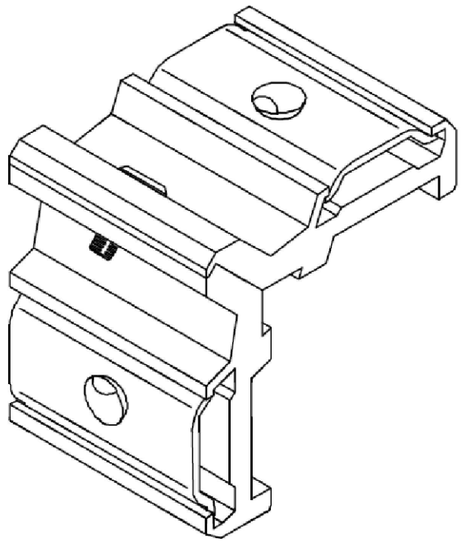

60 1/2" HOLE PLUG
NYLON



62 3/8" FIN SEAL WEATHERSTRIP
POLYPROPYLENE



63 1/4" BULB GASKET
POLYPROPYLENE



64 9/16" BEDDING GASKET
EPDM

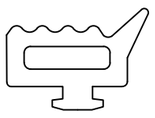

65 1-1/4" IG BEDDING GASKET
EPDM



66 ROLLER ASSEMBLY
VARIES

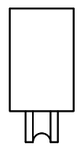

67 FIXED ROLLER ASSEMBLY
VARIES

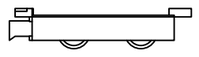

68 LOCKING LEVER
STEEL



69 PANEL MITER CORNER KEY
VARIES

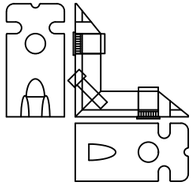

70 PANEL BLOCK CORNER KEY
6063-T5

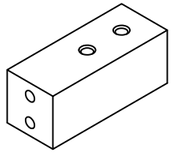

71 LOCKING TRANSMISSION
ZAMAC

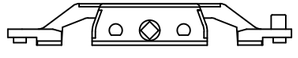

72 PAWL CATCH
ZAMAC



euro-wall
SUPERIOR BY DESIGN

EURO-WALL, LLC
P.O. BOX 8007,
NORTH PORT, FL 34290
PH: 888-989-3876

TITLE: MS MULTI-SLIDE SYSTEM (NON-HVHZ) (NON-IMPACT)
COMPONENTS

PREPARED BY:
BUILDING DROPS, INC.
1900 NE MIAMI COURT, SUITE 2-15
MIAMI, FL 33132
PH: (954) 399-8478
FAX: (954) 744-4738
WEB: www.buildingdrops.com

REMARKS	BY	DATE

THE INSTALLATION DETAILS DESCRIBED HEREIN ARE GENERIC AND MAY NOT REFLECT ACTUAL CONDITIONS FOR A SPECIFIC SITE. IF SITE CONDITIONS CAUSE INSTALLATION TO DEVIATE FROM THE REQUIREMENTS DETAILED HEREIN, A LICENSED ENGINEER OR ARCHITECT SHALL PREPARE SITE SPECIFIC DOCUMENTS FOR USE WITH THIS DOCUMENT.

HERMES F. NORERO LICENSE No. 73778 STATE OF FLORIDA PROFESSIONAL ENGINEER

HERMES F. NORERO P.E.
FLORIDA P.E. No. 73778
BUILDING DROPS, INC
1900 NE MIAMI COURT, SUITE 2-15
MIAMI, FL 33132
FBPE CERT. OF AUTHORIZATION No. 29578

FL #: FL48363

DATE: 10.01.2026

DWG. BY: JR | CHK. BY: HFN

SCALE: NTS

DWG. #: EWS061

SHEET: 12 OF 14

REV. 0

10/20/2026 1:03 PM

c:\users\julianarodriguez\building drops, inc\building drops landing - documents\common\projects\euro-wall, llc\fbc-26-0943 - euro-wall ms - multi-slide door - nafs\dwgs\ews061.dwg

(73) PAWL ASSEMBLY
ZAMAC, BRASS

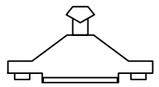

(74) POLYAMIDE CONNECTING ROD
GLASS FILLED NYLON



(75) WEEP HOLE COVER
NYLON



(76) HEADER WEATHERSTRIP HOLDER
NYLON

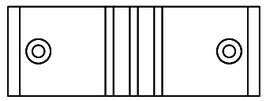

(77) DRAIN HOLE COVER
NYLON

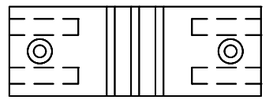

(78) FRAME ALIGNMENT CORNER KEY
6063-T5



(79) ASTRAGAL END CAP: FOR HOLLOW
NYLON

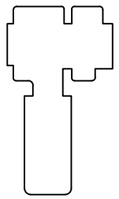

(80) ASTRAGAL END CAP: FOR FIN CHANNEL
NYLON

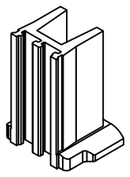

(81) ASTRAGAL BOTTOM D.L.O. GAP FILLER LEFT
NYLON

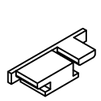

(82) ASTRAGAL BOTTOM D.L.O. GAP FILLER RIGHT
NYLON

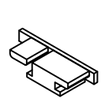

(83) ASTRAGAL TOP D.L.O. GAP FILLER
NYLON



(84) MITER STILE ALIGNMENT CORNER KEY
STAINLESS STEEL

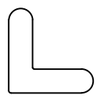

(85) VENTED HOLE COVER
NYLON



(86) DRAIN INSERT
NYLON



(87) LARGE DOOR BUMPER
NYLON

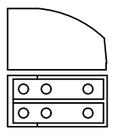

(88) INTERLOCK END CAP
NYLON

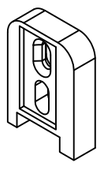

(89) E0040 END CAPS
NYLON

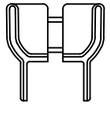

(90) E0367 END CAPS
NYLON

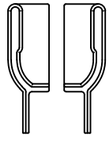

(91) E0243 END CAPS
NYLON

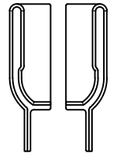

(92) E0365 END CAPS
NYLON



(93) E0237 END CAPS
NYLON

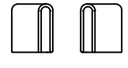

euro-wall
SUPERIOR BY DESIGN

EURO-WALL, LLC
P.O. BOX 8007,
NORTH PORT, FL 34290
PH: 888-989-3876

TITLE: MS MULTI-SLIDE SYSTEM (NON-HVHZ) (NON-IMPACT)
COMPONENTS

PREPARED BY:
BUILDING DROPS, INC.
1900 NE MIAMI COURT, SUITE 2-15
MIAMI, FL 33132
PH: (954) 399-8478
FAX: (954) 744-4738
WEB: www.buildingdrops.com

REMARKS	BY	DATE

THE INSTALLATION DETAILS DESCRIBED HEREIN ARE GENERIC AND MAY NOT REFLECT ACTUAL CONDITIONS FOR A SPECIFIC SITE. IF SITE CONDITIONS CAUSE INSTALLATION TO DEVIATE FROM THE REQUIREMENTS DETAILED HEREIN, A LICENSED ENGINEER OR ARCHITECT SHALL PREPARE SITE SPECIFIC DOCUMENTS FOR USE WITH THIS DOCUMENT.

HERMES F. NORERO LICENSE No. 73778 STATE OF FLORIDA PROFESSIONAL ENGINEER

HERMES F. NORERO P.E.
FLORIDA P.E. No. 73778
BUILDING DROPS, INC
1900 NE MIAMI COURT, SUITE 2-15
MIAMI, FL 33132
FBPE CERT. OF AUTHORIZATION No. 29578

FL #: FL48363

DATE: 10.01.2026

DWG. BY: JR | CHK. BY: HFN

SCALE: NTS

DWG. #: EWS061

SHEET: 13 | REV. 0

94 POCKET INTERLOCK END CAPS
NYLON

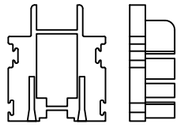

95 POCKET A COVER
NYLON

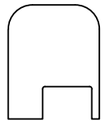

96 POCKET B COVER
NYLON

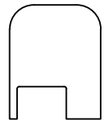

97 POCKET UPPER PLUG
LOW DENSITY FOAM



98 POCKET LOWER PLUG
LOW DENSITY FOAM



99 POCKET PLUG HOLDER WITH GUIDE
NYLON

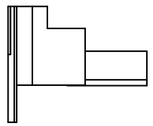

100 POCKET COVER A: 1.00" RISER
NYLON

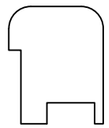

101 POCKET COVER B: 1.00" RISER
NYLON

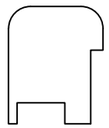

102 POCKET INTERLOCK END CAP A: 1.00" RISER
NYLON

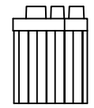

103 POCKET INTERLOCK END CAP B: 1.00" RISER
NYLON

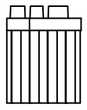

104 POCKET FRAME GAP FILLER
NYLON

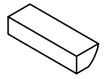

euro-wall
SUPERIOR BY DESIGN

EURO-WALL, LLC
P.O. BOX 8007,
NORTH PORT, FL 34290
PH: 888-989-3876

TITLE: MS MULTI-SLIDE SYSTEM (NON-HVHZ) (NON-IMPACT)
COMPONENTS

PREPARED BY:
BUILDING DROPS, INC.
1900 NE MIAMI COURT, SUITE 2-15
MIAMI, FL 33132
PH: (954) 399-8478
FAX: (954) 744-4738
WEB: www.buildingdrops.com

REMARKS	BY	DATE

THE INSTALLATION DETAILS DESCRIBED HEREIN ARE GENERIC AND MAY NOT REFLECT ACTUAL CONDITIONS FOR A SPECIFIC SITE. IF SITE CONDITIONS CAUSE INSTALLATION TO DEVIATE FROM THE REQUIREMENTS DETAILED HEREIN, A LICENSED ENGINEER OR ARCHITECT SHALL PREPARE SITE SPECIFIC DOCUMENTS FOR USE WITH THIS DOCUMENT.

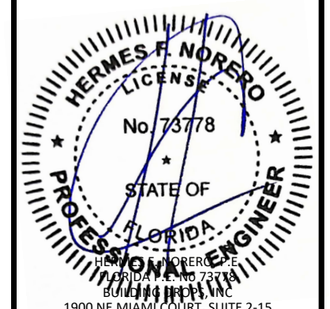

HERMES F. NORERO, P.E.
FLORIDA P.E. No. 73778
BUILDING DROPS, INC.
1900 NE MIAMI COURT, SUITE 2-15
MIAMI, FL 33132
FBPE CERT. OF AUTHORIZATION No. 29578

FL #: FL48363

DATE: 10.01.2026

DWG. BY:	CHK. BY:
JR	HFN

SCALE: NTS

DWG. #: EWS061

SHEET: 14 OF 14

REV. 0

10/20/2026 1:03 PM
c:\users\julianarodriguez\building drops, inc\building drops landing - documents\common\projects\euro-wall_llc\fbc-26-0943 - euro-wall ms - multi-slide door - nafs\dwgs\ews061.dwg