10/20/2026 12:48 PM
c:\users\julianarodrigue2\building drops, inc\building drops landing - documents\common\projects\euro-wall, llc\fbc-26-0943 - euro-wall ms - multi-slide door - nafs\dwgs\ews060.dwg

# EURO-WALL, LLC

## *MS-MULTISLIDE SYSTEM (WZ3) (IMPACT)*

GENERAL NOTES:

1. THE PRODUCT SHOWN HEREIN IS DESIGNED AND MANUFACTURED TO COMPLY WITH THE CURRENT FLORIDA BUILDING CODE (FBC), **EXCLUDING** HVHZ AND HAS BEEN EVALUATED ACCORDING TO THE FOLLOWING:
   - TAS 201-94
   - TAS 202-94
   - TAS 203-94
   - ASTM E1886-19
   - ASTM E1996-23
   - AAMA/WDMA/CSA 101/I.S.2/A440-22
2. ADEQUACY OF THE EXISTING STRUCTURAL CONCRETE/MASONRY, 2X AND METAL STUD FRAMING AS A MAIN WIND FORCE RESISTING SYSTEM CAPABLE OF WITHSTANDING AND TRANSFERRING APPLIED PRODUCT LOADS TO THE FOUNDATION IS THE RESPONSIBILITY OF THE ENGINEER OR ARCHITECT OF RECORD FOR THE PROJECT OF INSTALLATION.
3. 1X AND 2X BUCKS (WHEN USED) SHALL BE DESIGNED AND ANCHORED TO PROPERLY TRANSFER ALL LOADS TO THE STRUCTURE. BUCK DESIGN AND INSTALLATION IS THE RESPONSIBILITY OF THE ENGINEER OR ARCHITECT OF RECORD FOR THE PROJECT OF INSTALLATION.
4. THE INSTALLATION DETAILS DESCRIBED HEREIN ARE GENERIC AND MAY NOT REFLECT ACTUAL CONDITIONS FOR A SPECIFIC SITE. IF SITE CONDITIONS CAUSE INSTALLATION TO DEVIATE FROM THE REQUIREMENTS DETAILED HEREIN, A LICENSED ENGINEER OR ARCHITECT SHALL PREPARE SITE SPECIFIC DOCUMENTS FOR USE WITH THIS DOCUMENT.
5. APPROVED IMPACT PROTECTIVE SYSTEM **IS NOT REQUIRED** TO PROTECT THIS PRODUCT IN WIND ZONE 3 OR LESS.
6. APPROVED IMPACT PROTECTIVE SYSTEM **IS REQUIRED** TO PROTECT THIS PRODUCT IN WIND ZONE 4.
7. DOOR FRAME MATERIAL: EXTRUDED ALUMINUM (6063-T5).
8. GLASS MEETS THE REQUIREMENTS OF ASTM E1300 GLASS CHARTS. SEE SHEET 1 FOR GLAZING DETAILS.
9. DISSIMILAR METALS INCLUDING FASTENERS THAT MAY COME INTO CONTACT WITH ALUMINUM COMPONENTS SHALL BE PROTECTED IN ACCORDANCE WITH THE FBC.

| DESIGN PRESSURE RATING | | | |
|---|---|---|---|
| MAX. UNIT DIMENSIONS | DESIGN PRESSURE | WATER TEST PRESSURE | MISSILE IMPACT RATING |
| SEE SHEET 4 | | 7.5 PSF | LARGE & SMALL MISSILE IMPACT |

| TABLE OF CONTENTS | |
|---|---|
| SHEET | SHEET DESCRIPTION |
| 1 | GENERAL NOTES & GLAZING DETAILS |
| 2 | ELEVATION |
| 3 | ANCHOR LAYOUT |
| 4 | DESIGN PRESSURE TABLE |
| 5 | VERTICAL SECTIONS |
| 6 | HORIZONTAL SECTIONS |
| 7 | HORIZONTAL SECTIONS |
| 8 | ANCHOR DETAILS |
| 9 | ANCHOR DETAILS, INSTALLATION NOTES, & ANCHOR SCHEDULE |
| 10 | BILL OF MATERIALS |
| 11 | COMPONENTS |
| 12 | COMPONENTS |
| 13 | COMPONENTS |
| 14 | COMPONENTS |

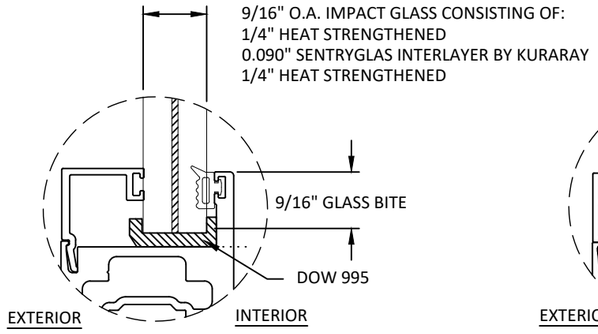


**GLAZING DETAIL 1**

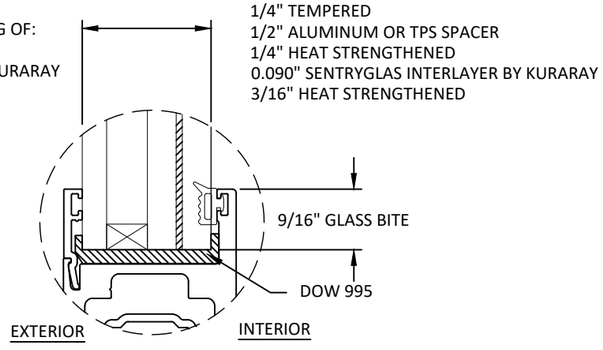


**GLAZING DETAIL 2**

GLAZING NOTES:
1. GLASS TYPE COMPLIES WITH ASTM E1300 REQUIREMENTS.
2. SETTING BLOCKS TO BE LOCATED AT 1/4 SPAN LENGTH FOR GLASS WIDER THAN 36" AS PER FBC CHAPTER 24.
3. SETTING BLOCK DUROMETER HARDNESS OF 70-90 (SHORE A) AS REFERENCED IN FBC CHAPTER 24.
4. GLASS TYPE SHALL COMPLY WITH APPLICABLE GLAZING REQUIREMENTS PER CHAPTER 24 OF THE FBC

euro-wall
SUPERIOR BY DESIGN

EURO-WALL, LLC
P.O. BOX 8007,
NORTH PORT, FL 34290
PH: 888-989-3876

TITLE: MS MULTI-SLIDE SYSTEM (WZ3) (IMPACT)

GENERAL NOTES & GLAZING DETAILS

PREPARED BY:
BUILDING DROPS, INC.
1900 NE MIAMI COURT, SUITE 2-15
MIAMI, FL 33132
PH: (954) 399-8478
FAX: (954) 744-4738
WEB: www.buildingdrops.com

| REMARKS | BY | DATE |
|---|---|---|
| | | |
| | | |
| | | |
| | | |

THE INSTALLATION DETAILS DESCRIBED HEREIN ARE GENERIC AND MAY NOT REFLECT ACTUAL CONDITIONS FOR A SPECIFIC SITE. IF SITE CONDITIONS CAUSE INSTALLATION TO DEVIATE FROM THE REQUIREMENTS DETAILED HEREIN, A LICENSED ENGINEER OR ARCHITECT SHALL PREPARE SITE SPECIFIC DOCUMENTS FOR USE WITH THIS DOCUMENT.

Digitally signed by Hermes F. Norero, P.E.
Reason: I am approving this document
Date: 2026.10.21 13:37:27 -04'00'

HERMES F. NORERO LICENSE No. 73778 STATE OF FLORIDA PROFESSIONAL ENGINEER

HERMES F. NORERO, P.E.
FLORIDA P.E. NO. 73778
BUILDING DROPS, INC
1900 NE MIAMI COURT, SUITE 2-15
MIAMI, FL 33132
FBPE CERT. OF AUTHORIZATION No. 29578

FL #: FL48363

DATE: 10.01.2026

DWG. BY: JR | CHK. BY: HFN

SCALE: NTS

DWG. #: EWS060

SHEET: 1 OF 14

REV. 0

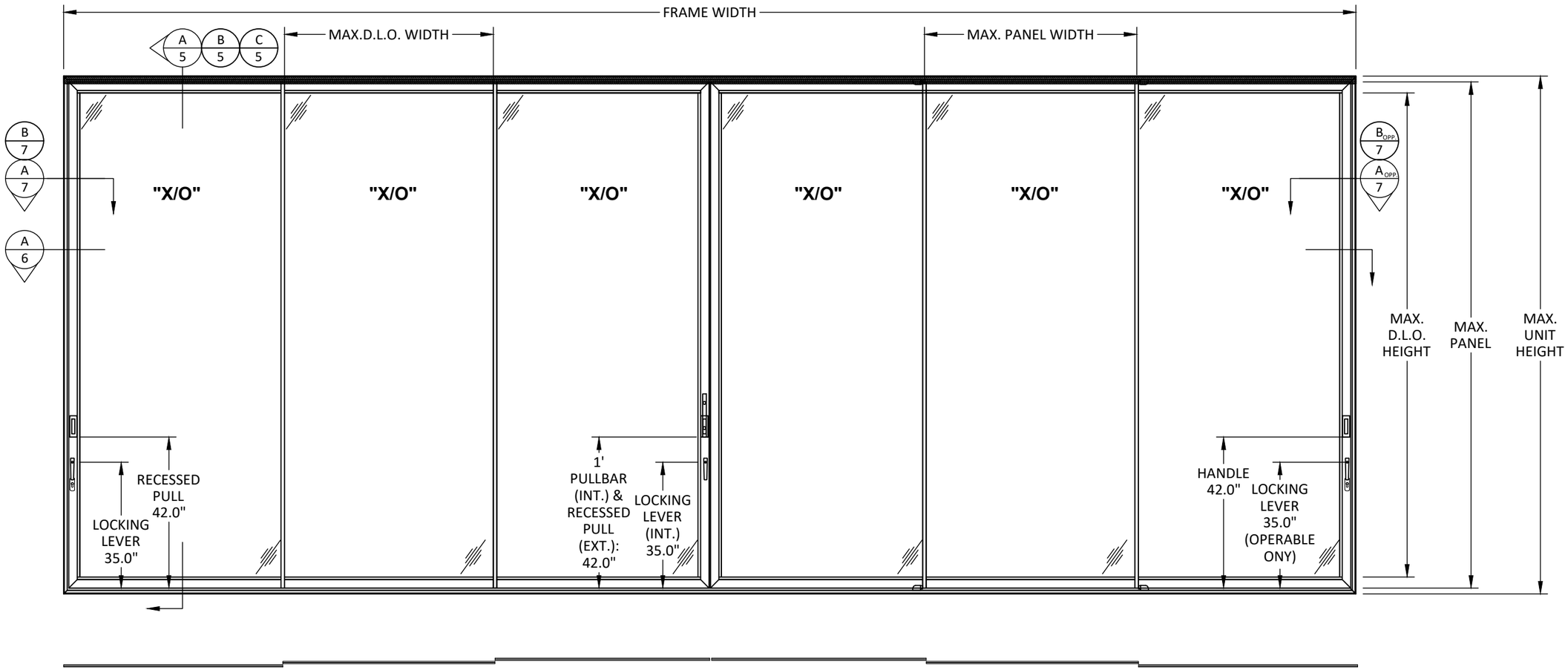


# TYPICAL ELEVATION

**SLIDING GLASS DOOR**

*NOTES:

- SEE SHEET 4 FOR QUALIFIED CONFIGURATIONS.
- FRAME WIDTH = (NUMBER OF PANELS)*(PANELS WIDTH)
- MAX. D.L.O. WIDTH = PANEL WIDTH - 1.900"
- MAX. D.L.O. HEIGHT = PANEL HEIGHT - 6.100"
- MAX. OF 4 PANELS CONNECTED TO CORNER UNIT ON EACH SIDE.

## QUALIFIED 90 DEGREE OUTSIDE CORNER UNIT

*SEE SHEET 4 FOR QUALIFIED CORNER UNIT SIZE AND RESPECTIVE DESIGN PRESSURES.

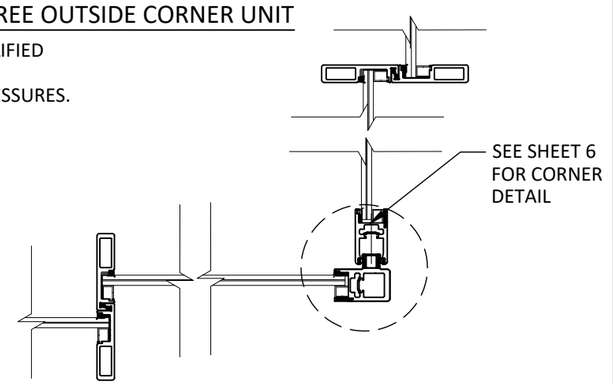


euro-wall
SUPERIOR BY DESIGN

EURO-WALL, LLC
P.O. BOX 8007,
NORTH PORT, FL 34290
PH: 888-989-3876

TITLE: MS MULTI-SLIDE SYSTEM (WZ3) (IMPACT)

ELEVATION

PREPARED BY:
BUILDING DROPS, INC.
1900 NE MIAMI COURT, SUITE 2-15
MIAMI, FL 33132
PH: (954) 399-8478
FAX: (954) 744-4738
WEB: www.buildingdrops.com

| REMARKS | BY | DATE |
|---|---|---|
| | | |
| | | |
| | | |
| | | |

THE INSTALLATION DETAILS DESCRIBED HEREIN ARE GENERIC AND MAY NOT REFLECT ACTUAL CONDITIONS FOR A SPECIFIC SITE. IF SITE CONDITIONS CAUSE INSTALLATION TO DEVIATE FROM THE REQUIREMENTS DETAILED HEREIN, A LICENSED ENGINEER OR ARCHITECT SHALL PREPARE SITE SPECIFIC DOCUMENTS FOR USE WITH THIS DOCUMENT.

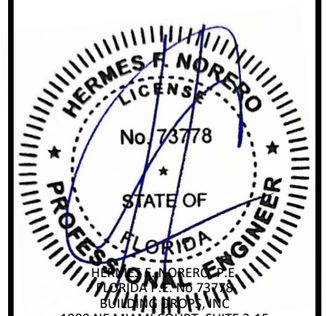


HERMES F. NORERO P.E.
FLORIDA P.E. No 73778
BUILDING DROPS, INC
1900 NE MIAMI COURT, SUITE 2-15
MIAMI, FL 33132
FBPE CERT. OF AUTHORIZATION No. 29578

FL #: FL48363

DATE: 10.01.2026

| DWG. BY: | CHK. BY: |
|---|---|
| JR | HFN |

SCALE: NTS

DWG. #: EWS060

SHEET: 2 OF 14

REV. 0

10/20/2026 12:48 PM
c:\users\julianarodrigue1\building drops, inc\building drops landing - documents\common\projects\euro-wall. llc\fbc-26-0943 - euro-wall ms - multi-slide door - nafs\dwgs\ews060.dwg

10/20/2026 12:48 PM
c:\Users\julianarodriguez\building drops, inc\building drops landing - documents\common\projects\euro-wall_llc\fbc-26-0943 - euro-wall ms - multi-slide door - nafs\dwgs\ews060.dwg

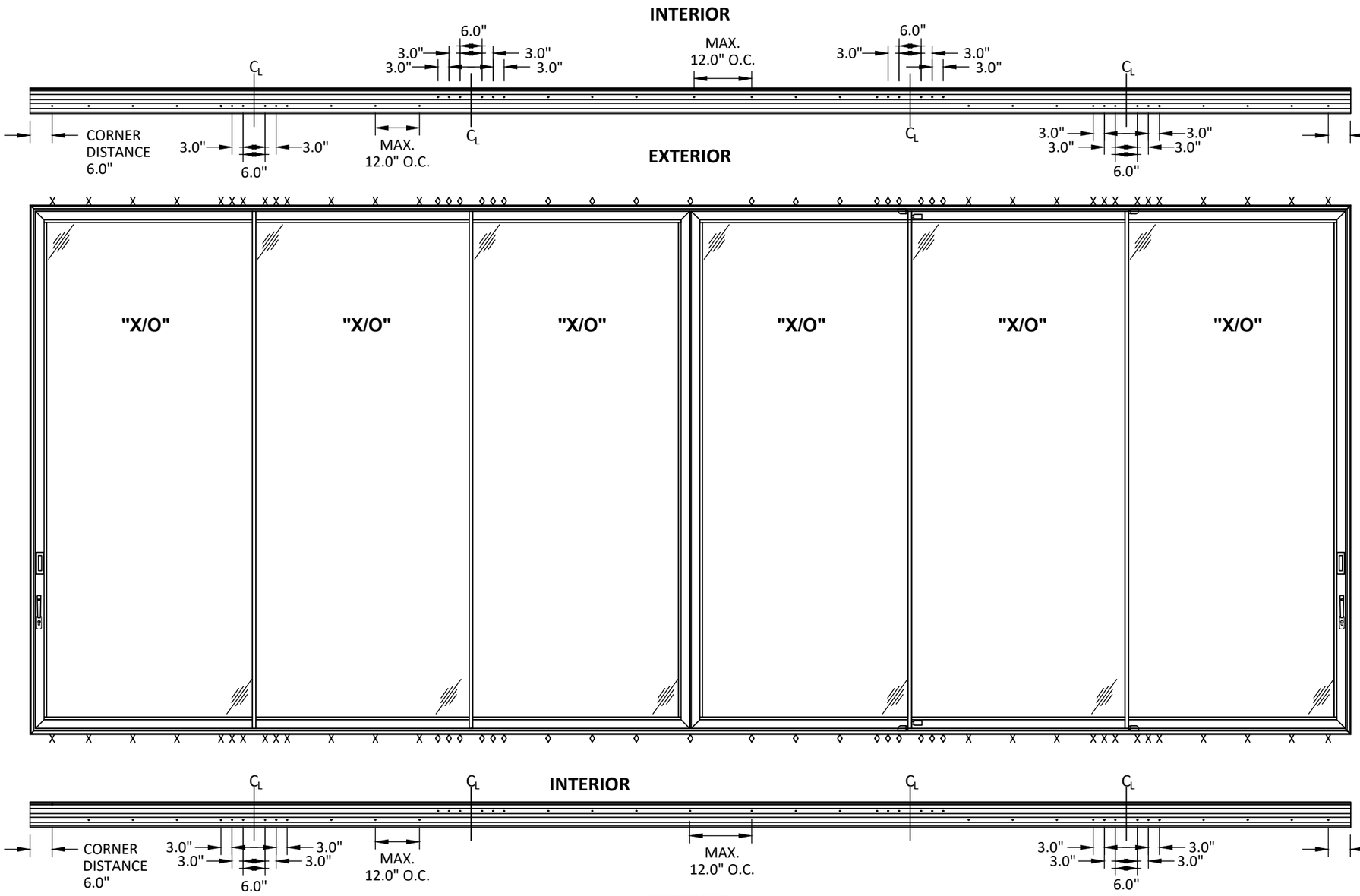


x =ANCHORS LOCATED ON THE EXTERIOR TRACK
◊ =ANCHORS LOCATED ON THE INTERIOR TRACK

POCKET INSTALLATION NOTES:
1) ANCHORS FROM WALL BRACKET AND FROM HOOK STRIP TO BRACKET SHALL BE PLACED AT 4" MAX. FROM THE CORNERS AND 12" MAX. O.C.
2) WHEN POCKET IS USED, JAMB INSTALLATION ANCHORS SHALL BE INSTALLED AT 6" MAX. FROM THE CORNERS AND 36" MAX. O.C.

# ANCHOR LAYOUT

**SLIDING GLASS DOOR**

ANCHOR PATTERN FOR 2 TRACK
(HEAD/SILL AND JAMBS)

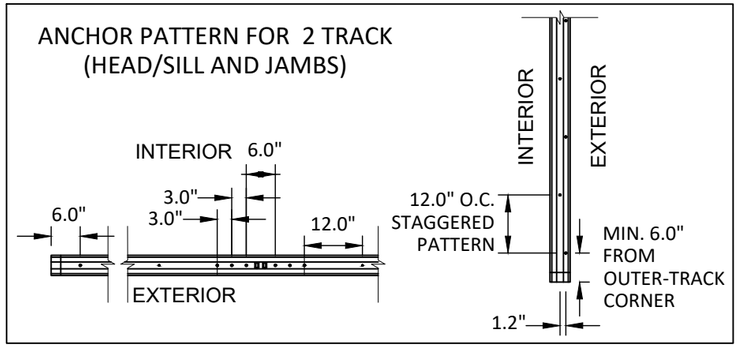


euro-wall
SUPERIOR BY DESIGN

EURO-WALL, LLC
P.O. BOX 8007,
NORTH PORT, FL 34290
PH: 888-989-3876

TITLE: MS MULTI-SLIDE SYSTEM (WZ3) (IMPACT)

ANCHOR LAYOUT

PREPARED BY:
BUILDING DROPS, INC.
1900 NE MIAMI COURT, SUITE 2-15
MIAMI, FL 33132
PH: (954) 399-8478
FAX: (954) 744-4738
WEB: www.buildingdrops.com

| REMARKS | BY | DATE |
|---|---|---|
| | | |
| | | |
| | | |
| | | |

THE INSTALLATION DETAILS DESCRIBED HEREIN ARE GENERIC AND MAY NOT REFLECT ACTUAL CONDITIONS FOR A SPECIFIC SITE. IF SITE CONDITIONS CAUSE INSTALLATION TO DEVIATE FROM THE REQUIREMENTS DETAILED HEREIN, A LICENSED ENGINEER OR ARCHITECT SHALL PREPARE SITE SPECIFIC DOCUMENTS FOR USE WITH THIS DOCUMENT.

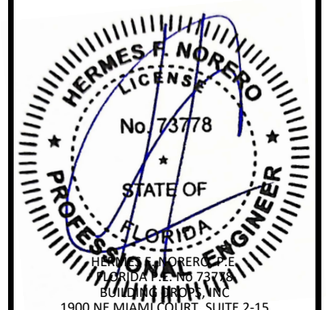


HERMES F. NORERO, P.E.
FLORIDA LICENSE NO 73778
BUILDING DROPS, INC
1900 NE MIAMI COURT, SUITE 2-15
MIAMI, FL 33132
FBPE CERT. OF AUTHORIZATION No. 29578

FL #: FL48363

DATE: 10.01.2026

| DWG. BY: | CHK. BY: |
|---|---|
| JR | HFN |

SCALE: NTS

DWG. #: EWS060

SHEET: 3 OF 14

REV. 0

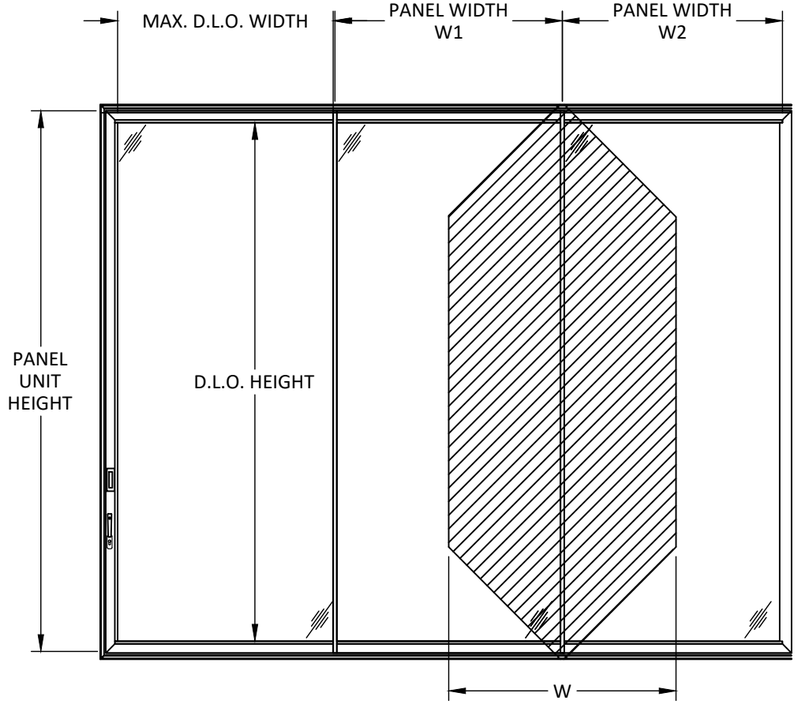


TRIBUTARY WIDTH(W) = (W1+W2)/2

- APPROVED CONFIGURATIONS:
  2 PANEL - OX, XO, XX
  3 PANEL - OOX, XOO, XOX, OXO, XXO, OXX, XXX
  4 PANEL - OXXO, OXXX, XXXO, XXOO, XOOX, OOXX, XXXX
  5 PANEL - XXOOO, OOOXX, XXXXX, OXXXX, XXXXO
  6 PANEL - OXXXXO, OXXXXP, XXXXXX, XXXOOO, OOOXXX, OOXXOOO, XOOOOX, XXXXXO, OXXXXX,XXXXXX
  7 PANEL - XXXXXXX, OXXXXXX, XXXXXXO, OXXXXXO
  8 PANEL - OXXXXXXO, OXXXXXXX, XXXXXXXO, XXXXXXXX
- POCKETS ARE QUALIFIED ON ANY CONFIGURATION.
- POCKETS ARE QUALIFIED FOR INSTALLATION ON EITHER SIDE OF THE SYSTEM. POCKETS ARE QUALIFIED TO BE USED ON BOTH SIDE AT THE SAME TIME.

NOTE:
MAXIMUM OF 4 PANEL CONNECTED TO CORNER UNIT ON EACH SIDE.

**DESIGN PRESSURE TABLE (PSF)**

| PANEL HEIGHT (INCHES) \ TRIBUTARY WIDTH (INCHES) | 45 | 48 | 51 | 54 | 57 | 60 | 63 | 66 | 69 | 72 | 75 | 78 | 81 | 84 |
|---|---|---|---|---|---|---|---|---|---|---|---|---|---|---|
| 90 | 50.0 | 50.0 | 50.0 | 50.0 | 50.0 | 50.0 | 50.0 | 50.0 | 50.0 | 50.0 | 50.0 | 50.0 | 50.0 | 50.0 |
| 96 | 50.0 | 50.0 | 50.0 | 50.0 | 50.0 | 50.0 | 50.0 | 50.0 | 50.0 | 50.0 | 50.0 | 50.0 | 50.0 | 50.0 |
| 102 | 50.0 | 50.0 | 50.0 | 50.0 | 50.0 | 50.0 | 50.0 | 50.0 | 50.0 | 50.0 | 50.0 | 50.0 | 50.0 | 50.0 |
| 108 | 50.0 | 50.0 | 50.0 | 50.0 | 50.0 | 50.0 | 50.0 | 50.0 | 50.0 | 50.0 | 50.0 | 50.0 | - | - |
| 114 | 50.0 | 50.0 | 50.0 | 50.0 | 50.0 | 50.0 | 50.0 | 50.0 | 50.0 | 50.0 | 50.0 | - | - | - |
| 120 | 50.0 | 50.0 | 50.0 | 50.0 | 50.0 | 50.0 | 50.0 | 50.0 | 50.0 | 50.0 | - | - | - | - |
| 126 | 50.0 | 50.0 | 50.0 | 50.0 | 50.0 | 50.0 | 50.0 | 50.0 | - | - | - | - | - | - |
| 132 | 50.0 | 50.0 | 50.0 | 50.0 | 50.0 | 50.0 | 50.0 | - | - | - | - | - | - | - |
| 138 | 50.0 | 50.0 | 50.0 | 50.0 | 50.0 | 50.0 | - | - | - | - | - | - | - | - |
| 144 | 50.0 | 50.0 | 50.0 | 50.0 | 50.0 | 50.0 | - | - | - | - | - | - | - | - |
| 150 | 50.0 | 50.0 | 50.0 | 48.3 | 46.0 | - | - | - | - | - | - | - | - | - |
| 156 | 50.0 | 47.6 | 45.0 | 42.7 | - | - | - | - | - | - | - | - | - | - |
| 162 | 45.0 | 42.4 | 40.1 | - | - | - | - | - | - | - | - | - | - | - |
| 168 | 40.3 | 37.9 | 35.8 | - | - | - | - | - | - | - | - | - | - | - |


euro-wall
SUPERIOR BY DESIGN

EURO-WALL, LLC
P.O. BOX 8007,
NORTH PORT, FL 34290
PH: 888-989-3876


TITLE: MS MULTI-SLIDE SYSTEM (WZ3) (IMPACT)
DESIGN PRESSURE TABLE


PREPARED BY:
BUILDING DROPS, INC.
1900 NE MIAMI COURT, SUITE 2-15
MIAMI, FL 33132
PH: (954) 399-8478
FAX: (954) 744-4738
WEB: www.buildingdrops.com


| REMARKS | BY | DATE |
|---|---|---|
| | | |
| | | |
| | | |
| | | |

THE INSTALLATION DETAILS DESCRIBED HEREIN ARE GENERIC AND MAY NOT REFLECT ACTUAL CONDITIONS FOR A SPECIFIC SITE. IF SITE CONDITIONS CAUSE INSTALLATION TO DEVIATE FROM THE REQUIREMENTS DETAILED HEREIN, A LICENSED ENGINEER OR ARCHITECT SHALL PREPARE SITE SPECIFIC DOCUMENTS FOR USE WITH THIS DOCUMENT.

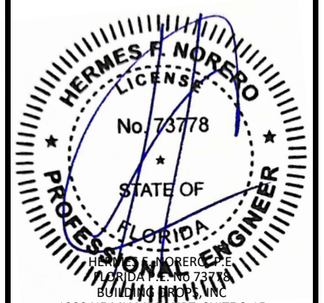



HERMES F. NORERO, P.E.
FLORIDA P.E. NO. 73778
BUILDING DROPS, INC
1900 NE MIAMI COURT, SUITE 2-15
MIAMI, FL 33132
FBPE CERT. OF AUTHORIZATION No. 29578


FL #: FL48363

DATE: 10.01.2026

DWG. BY: JR | CHK. BY: HFN

SCALE: NTS

DWG. #: EWS060

SHEET: 4 OF 14

REV. 0


10/20/2026 12:48 PM
c:\users\julianarodriguez\building drops, inc\building drops landing - documents\common\projects\euro-wall, llc\fbc-26-0943 - euro-wall ms - multi-slide door - nafs\dwgs\ews060.dwg

*NOTE:
9/16" LAMINATED GLASS SHOWN
1-1/4" INSULATED GLASS ALSO QUALIFIED

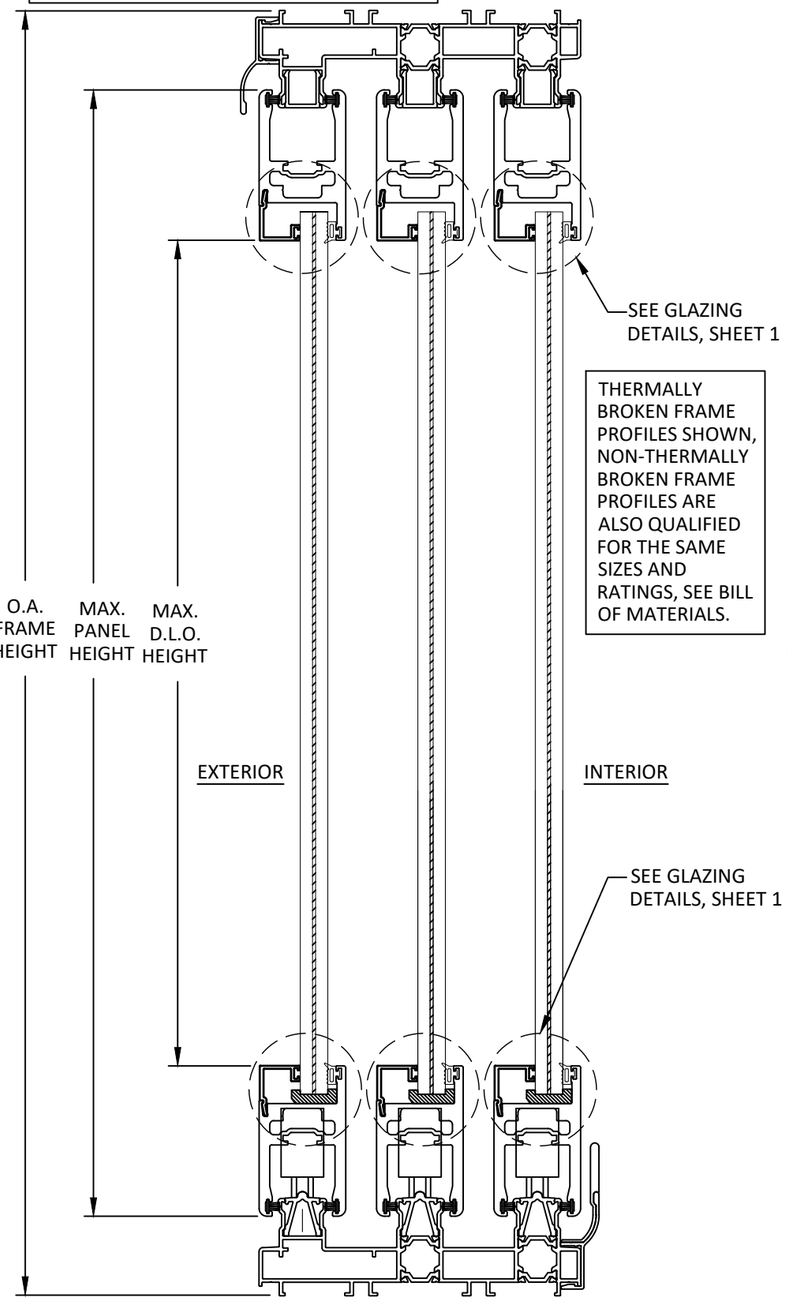


THERMALLY BROKEN FRAME PROFILES SHOWN, NON-THERMALLY BROKEN FRAME PROFILES ARE ALSO QUALIFIED FOR THE SAME SIZES AND RATINGS, SEE BILL OF MATERIALS.

*SILL RISERS ARE OPTIONAL.

## A/5 VERTICAL SECTION

**SLIDING GLASS DOOR**
**3 TRACK**

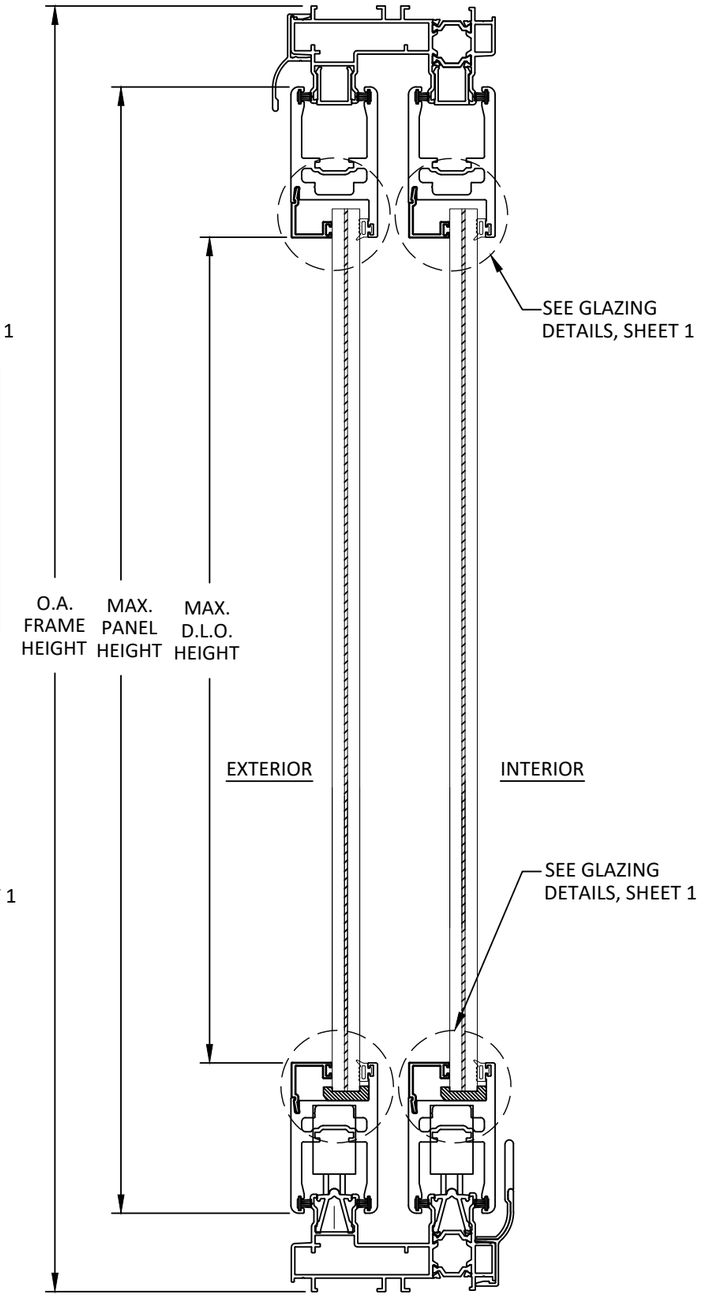


## B/5 VERTICAL SECTION

**SLIDING GLASS DOOR**
**2 TRACK**

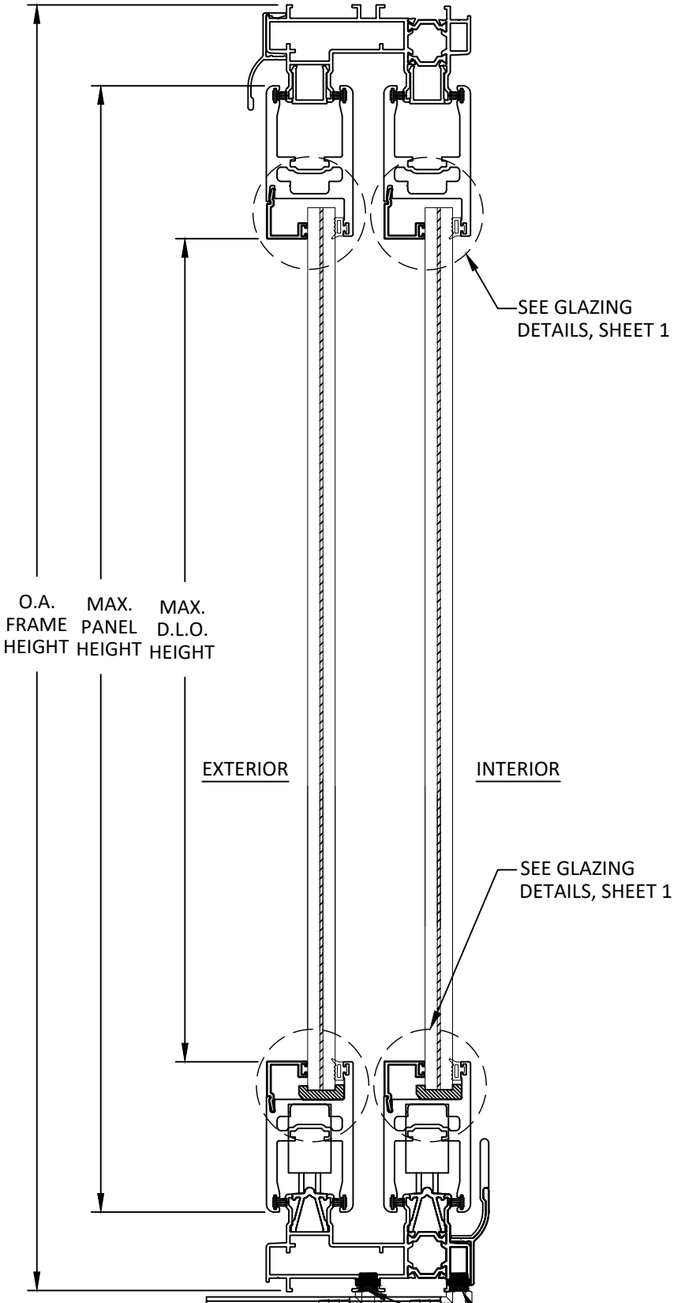


## C/5 VERTICAL SECTION

**SLIDING GLASS DOOR**
**OPTIONAL SUNKEN SILL**
**2 TRACK SHOWN, 3 TRACK QUALIFIED**

euro-wall
SUPERIOR BY DESIGN


EURO-WALL, LLC
P.O. BOX 8007,
NORTH PORT, FL 34290
PH: 888-989-3876


TITLE: MS MULTI-SLIDE SYSTEM (WZ3) (IMPACT)
VERTICAL SECTIONS


PREPARED BY:
BUILDING DROPS, INC.
1900 NE MIAMI COURT, SUITE 2-15
MIAMI, FL 33132
PH: (954) 399-8478
FAX: (954) 744-4738
WEB: www.buildingdrops.com


| REMARKS | BY | DATE |
|---|---|---|
| | | |
| | | |
| | | |
| | | |


THE INSTALLATION DETAILS DESCRIBED HEREIN ARE GENERIC AND MAY NOT REFLECT ACTUAL CONDITIONS FOR A SPECIFIC SITE. IF SITE CONDITIONS CAUSE INSTALLATION TO DEVIATE FROM THE REQUIREMENTS DETAILED HEREIN, A LICENSED ENGINEER OR ARCHITECT SHALL PREPARE SITE SPECIFIC DOCUMENTS FOR USE WITH THIS DOCUMENT.


HERMES F. NORERO LICENSE No. 73778 STATE OF FLORIDA PROFESSIONAL ENGINEER


HERMES F. NORERO, P.E.
FLORIDA P.E. NO. 73778
BUILDING DROPS, INC.
1900 NE MIAMI COURT, SUITE 2-15
MIAMI, FL 33132
FBPE CERT. OF AUTHORIZATION No. 29578


FL #: FL48363

DATE: 10.01.2026

DWG. BY: JR | CHK. BY: HFN

SCALE: NTS

DWG. #: EWS060

SHEET: 5 | REV. 0

OF 14


10/20/2026 12:48 PM
c:\users\julianarodriguez\building drops, inc\building drops landing - documents\common\projects\euro-wall. llc\fbc-26-0943 - euro-wall ms - multi-slide door - nafs\dwgs\ews060.dwg

10/20/2026 12:48 PM

c:\users\julianarodriguez\building drops, inc\building drops landing - documents\common\projects\euro-wall, llc\fbc-26-0943 - euro-wall ms - multi-slide door - nafs\dwgs\ews060.dwg

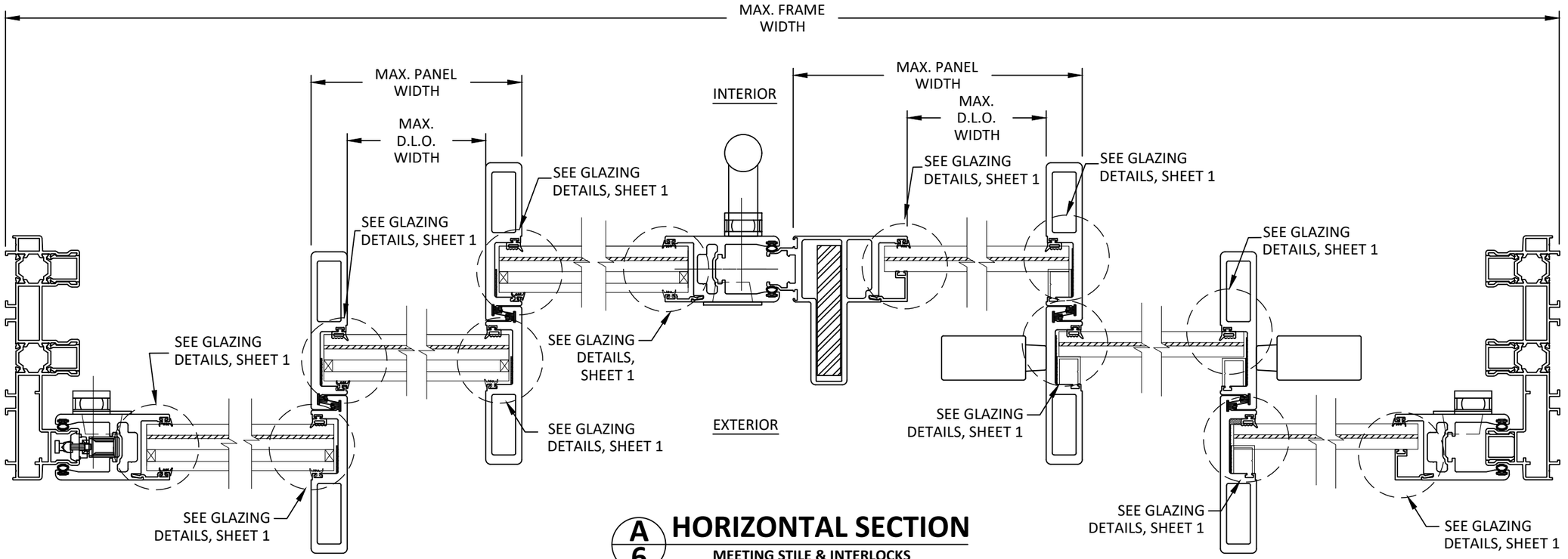


**A6 HORIZONTAL SECTION**

**MEETING STILE & INTERLOCKS**
**2 OR 3 TRACK**

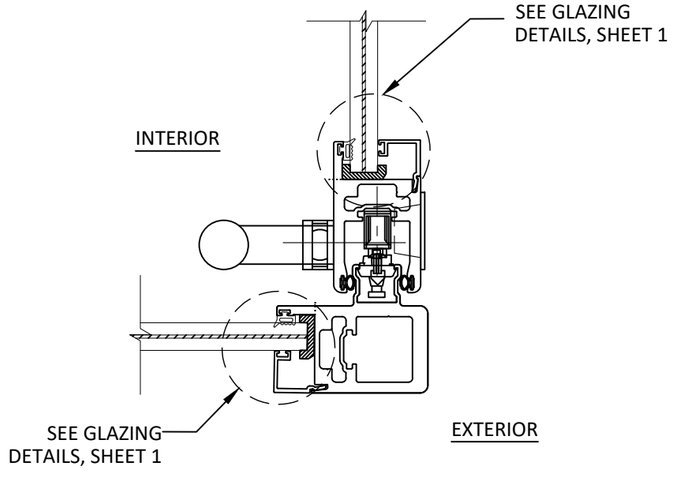


**B6 HORIZONTAL SECTION**

**OUTSIDE CORNER DETAIL**

*NOTE:
9/16" LAMINATED GLASS SHOWN
1 1/4" INSULATED GLASS ALSO QUALIFIED

THERMALLY BROKEN FRAME PROFILES SHOWN, NON-THERMALLY BROKEN FRAME PROFILES ARE ALSO QUALIFIED FOR THE SAME SIZES AND RATINGS, SEE BILL OF MATERIALS.

euro-wall
SUPERIOR BY DESIGN

EURO-WALL, LLC
P.O. BOX 8007,
NORTH PORT, FL 34290
PH: 888-989-3876

TITLE: MS MULTI-SLIDE SYSTEM (WZ3) (IMPACT)
HORIZONTAL SECTIONS

PREPARED BY:
BUILDING DROPS, INC.
1900 NE MIAMI COURT, SUITE 2-15
MIAMI, FL 33132
PH: (954) 399-8478
FAX: (954) 744-4738
WEB: www.buildingdrops.com

| REMARKS | BY | DATE |
|---|---|---|
| | | |
| | | |
| | | |
| | | |

THE INSTALLATION DETAILS DESCRIBED HEREIN ARE GENERIC AND MAY NOT REFLECT ACTUAL CONDITIONS FOR A SPECIFIC SITE. IF SITE CONDITIONS CAUSE INSTALLATION TO DEVIATE FROM THE REQUIREMENTS DETAILED HEREIN, A LICENSED ENGINEER OR ARCHITECT SHALL PREPARE SITE SPECIFIC DOCUMENTS FOR USE WITH THIS DOCUMENT.

HERMES F. NORERO LICENSE No. 73778 STATE OF FLORIDA PROFESSIONAL ENGINEER

HERMES F. NORERO P.E.
FLORIDA P.E. No 73778
BUILDING DROPS, INC
1900 NE MIAMI COURT, SUITE 2-15
MIAMI, FL 33132
FBPE CERT. OF AUTHORIZATION No. 29578

FL #: FL48363

DATE: 10.01.2026

DWG. BY: JR | CHK. BY: HFN

SCALE: NTS

DWG. #: EWS060

SHEET: 6 | REV. 0

10/20/2026 12:48 PM

c:\users\julianarodriguez\building drops, inc\building drops landing - documents\common\projects\euro-wall, llc\fbc-26-0943 - euro-wall ms - multi-slide door - nafs\dwgs\ews060.dwg

INTERIOR

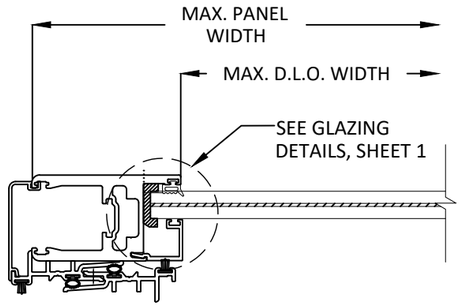


EXTERIOR

## A7 HORIZONTAL SECTION

**INSIDE POCKET WALL**

INTERIOR

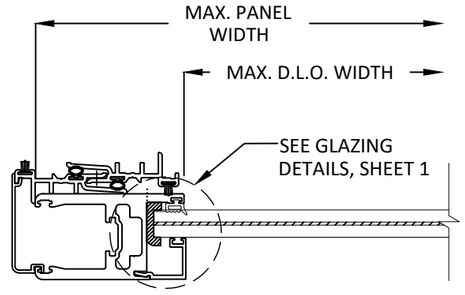


EXTERIOR

## B7 HORIZONTAL SECTION

**OUTSIDE POCKET WALL**

euro-wall
SUPERIOR BY DESIGN

EURO-WALL, LLC
P.O. BOX 8007,
NORTH PORT, FL 34290
PH: 888-989-3876

TITLE: MS MULTI-SLIDE SYSTEM (WZ3) (IMPACT)

HORIZONTAL SECTIONS

PREPARED BY:
BUILDING DROPS, INC.
1900 NE MIAMI COURT, SUITE 2-15
MIAMI, FL 33132
PH: (954) 399-8478
FAX: (954) 744-4738
WEB: www.buildingdrops.com

| REMARKS | BY | DATE |
|---|---|---|
| | | |
| | | |
| | | |
| | | |

THE INSTALLATION DETAILS DESCRIBED HEREIN ARE GENERIC AND MAY NOT REFLECT ACTUAL CONDITIONS FOR A SPECIFIC SITE. IF SITE CONDITIONS CAUSE INSTALLATION TO DEVIATE FROM THE REQUIREMENTS DETAILED HEREIN, A LICENSED ENGINEER OR ARCHITECT SHALL PREPARE SITE SPECIFIC DOCUMENTS FOR USE WITH THIS DOCUMENT.

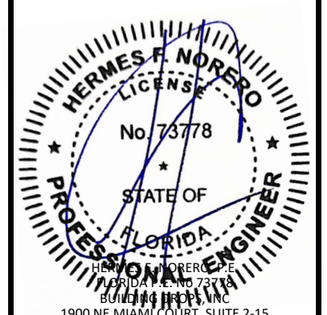


HERMES F. NORERO P.E.
FLORIDA P.E. No 73778
BUILDING DROPS, INC
1900 NE MIAMI COURT, SUITE 2-15
MIAMI, FL 33132
FBPE CERT. OF AUTHORIZATION No. 29578

FL #: FL48363

DATE: 10.01.2026

DWG. BY: JR | CHK. BY: HFN

SCALE: NTS

DWG. #: EWS060

SHEET: 7 OF 14

REV. 0

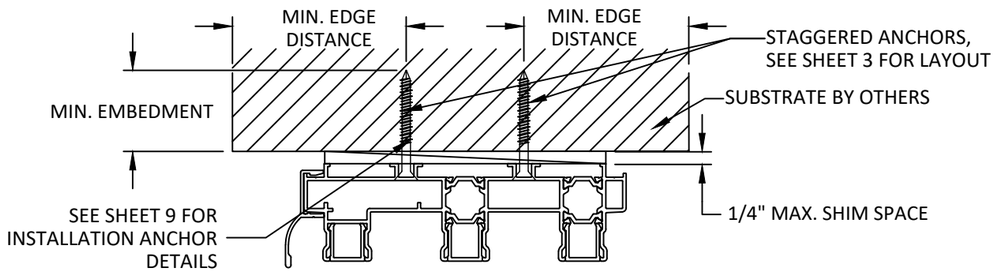


## A/8 ANCHOR DETAIL

**THROUGH FRAME INSTALLATION (HEAD)**
**3 TRACK**

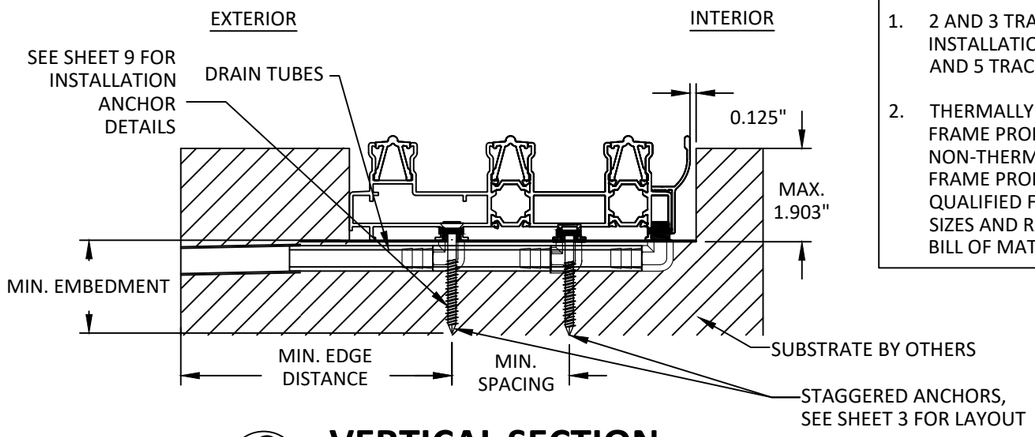


## C/8 VERTICAL SECTION

**THROUGH FRAME INSTALLATION (SILL)**
**OPTIONAL SUNKEN 3-TRACK INSTALLATION**

NOTES:

1. 2 AND 3 TRACK FRAME INSTALLATION SHOWN, 4 AND 5 TRACK SIMILAR
2. THERMALLY BROKEN FRAME PROFILES SHOWN, NON-THERMALLY BROKEN FRAME PROFILES ARE ALSO QUALIFIED FOR THE SAME SIZES AND RATINGS, SEE BILL OF MATERIALS.

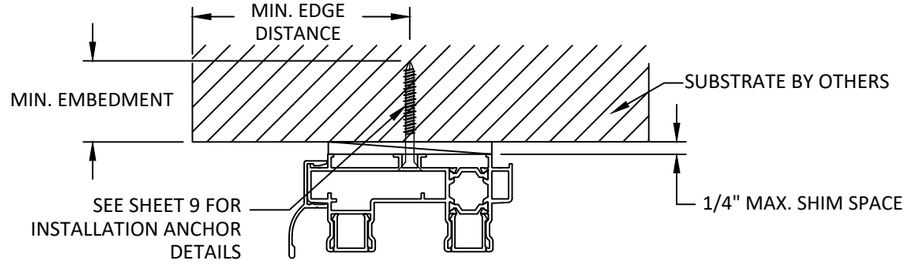


## B/8 ANCHOR DETAIL

**THROUGH FRAME INSTALLATION (HEAD)**
**2 TRACK**

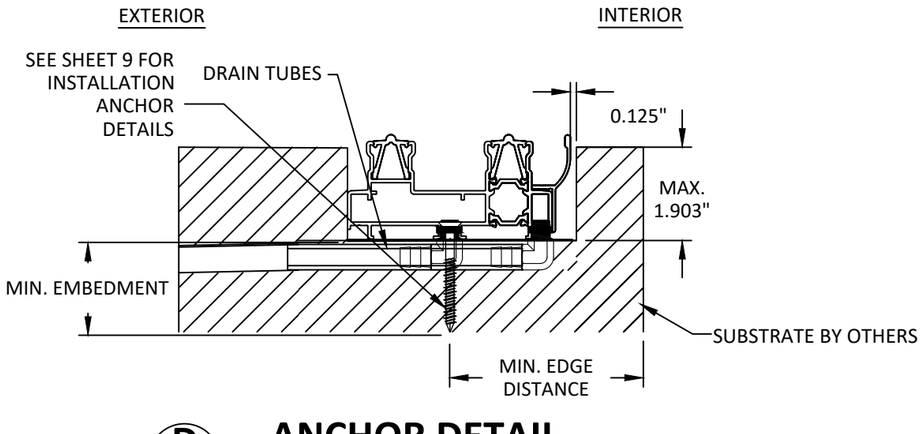


## D/8 ANCHOR DETAIL

**THROUGH FRAME INSTALLATION (SILL)**
**OPTIONAL SUNKEN 2-TRACK INSTALLATION**

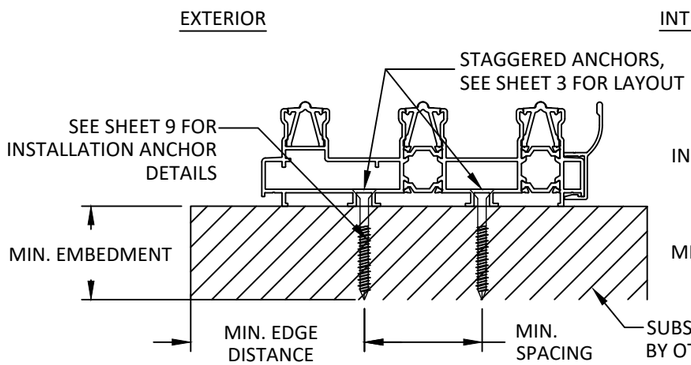


## E/8 ANCHOR DETAIL

**TRHOUGH FRAME INSTALLATION (SILL)**
**3 TRACK**

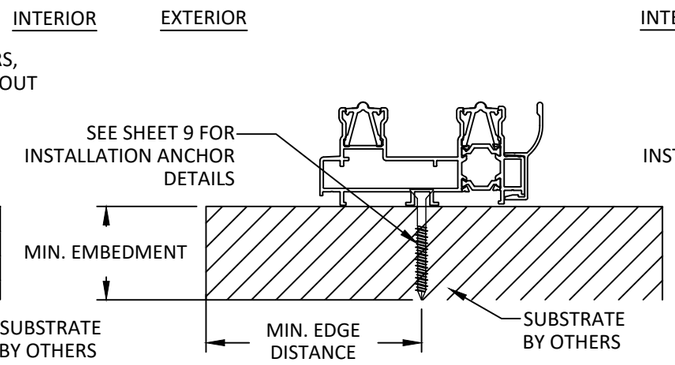


## F/8 ANCHOR DETAIL

**THROUGH FRAME INSTALLATION (SILL)**
**2 TRACK**

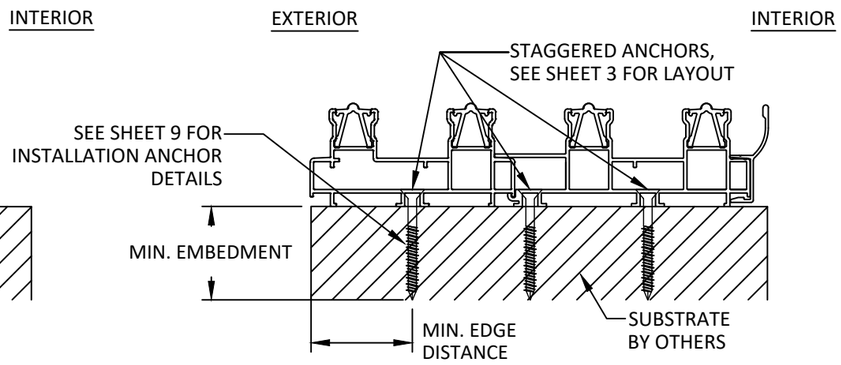


## G/8 ANCHOR DETAIL

**THROUGH FRAME INSTALLATION (SILL)**
**3 TRACK WITH EXTENSION**


euro-wall
SUPERIOR BY DESIGN

EURO-WALL, LLC
P.O. BOX 8007,
NORTH PORT, FL 34290
PH: 888-989-3876


TITLE: MS MULTI-SLIDE SYSTEM (WZ3) (IMPACT)
ANCHOR DETAILS


PREPARED BY:
BUILDING DROPS, INC.
1900 NE MIAMI COURT, SUITE 2-15
MIAMI, FL 33132
PH: (954) 399-8478
FAX: (954) 744-4738
WEB: www.buildingdrops.com


| REMARKS | BY | DATE |
|---|---|---|
| | | |
| | | |
| | | |
| | | |

THE INSTALLATION DETAILS DESCRIBED HEREIN ARE GENERIC AND MAY NOT REFLECT ACTUAL CONDITIONS FOR A SPECIFIC SITE. IF SITE CONDITIONS CAUSE INSTALLATION TO DEVIATE FROM THE REQUIREMENTS DETAILED HEREIN, A LICENSED ENGINEER OR ARCHITECT SHALL PREPARE SITE SPECIFIC DOCUMENTS FOR USE WITH THIS DOCUMENT.

HERMES F. NORERO LICENSE No. 73778 STATE OF FLORIDA PROFESSIONAL ENGINEER

HERMES F. NORERO P.E.
FLORIDA P.E. No. 73778
BUILDING DROPS, INC
1900 NE MIAMI COURT, SUITE 2-15
MIAMI, FL 33132
FBPE CERT. OF AUTHORIZATION No. 29578

FL #: FL48363

DATE: 10.01.2026

DWG. BY: JR | CHK. BY: HFN

SCALE: NTS

DWG. #: EWS060

SHEET: 8 | REV. 0

OF 14


10/20/2026 12:48 PM
c:\users\julianarodrigue1\building drops, inc\building drops landing - documents\common\projects\euro-wall, llc\fbc-26-0943 - euro-wall ms - multi-slide door - nafs\dwgs\ews060.dwg

10/20/2026 12:48 PM
c:\users\julianarodriguez\building drops, inc\building drops landing - documents\common\projects\euro-wall, llc\fbc-26-0943 - euro-wall ms - multi-slide door - nafs\dwgs\ews060.dwg

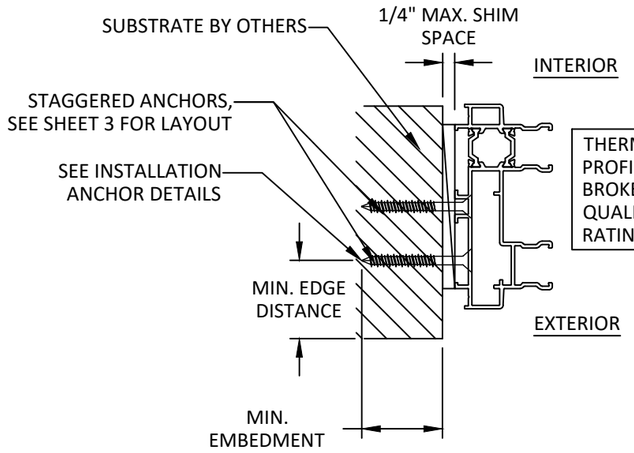


# A/9 ANCHOR DETAIL

**THROUGH FRAME (JAMB)**
**2 TRACK**

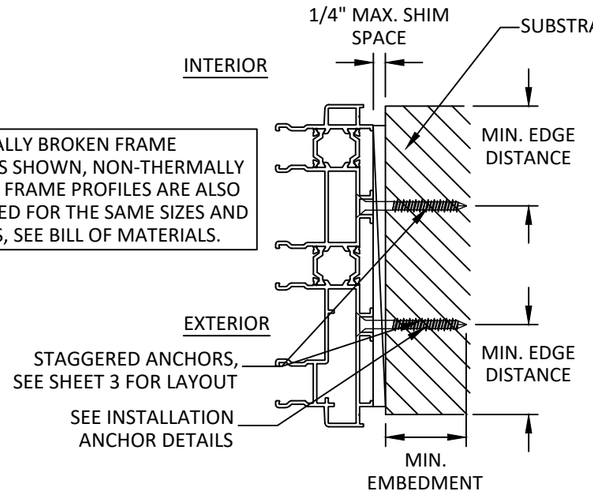


THERMALLY BROKEN FRAME PROFILES SHOWN, NON-THERMALLY BROKEN FRAME PROFILES ARE ALSO QUALIFIED FOR THE SAME SIZES AND RATINGS, SEE BILL OF MATERIALS.

# B/9 ANCHOR DETAIL

**THROUGH FRAME (JAMB)**
**3 TRACK**

ANCHOR FOR WALL BRACKET AND FROM HOOK STRIP TO BRACKET TO BE LOCATED AT 4" MAX. FROM CORNERS AND 12" MAX. O.C. SPACING

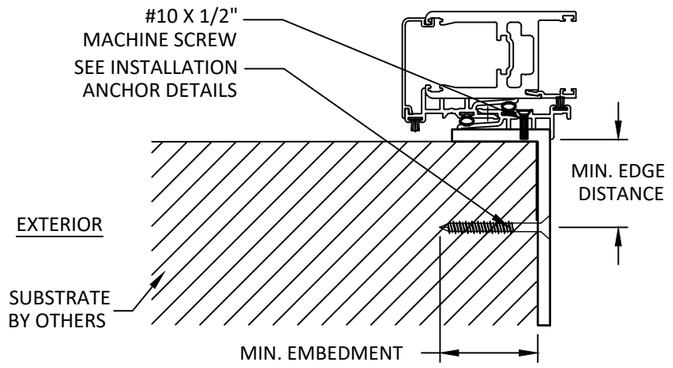


# C/9 ANCHOR DETAIL

**INSIDE POCKET BRACKET INSTALLATION**

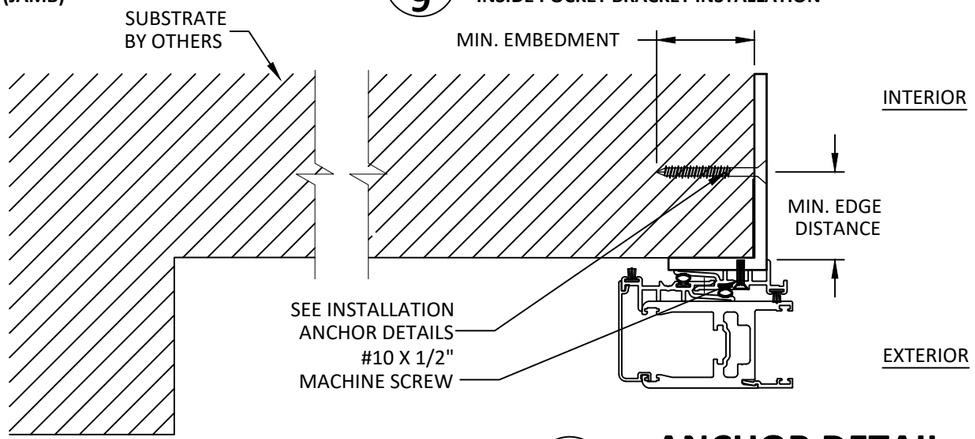


**NOTE**: OUTSIDE POCKET CONDITION SHALL BE OPEN TO THE EXTERIOR. OUTSIDE POCKET SHALL NOT BE ENCLOSED. POCKET CONSTRUCTION DETAILS BY OTHERS.

# D/9 ANCHOR DETAIL

**OUTSIDE POCKET BRACKET INSTALLATION**

INSTALLATION NOTES:

1. ONE (1) INSTALLATION ANCHOR IS REQUIRED AT EACH ANCHOR LOCATION SHOWN UNLESS SPECIFIED IN THE ANCHOR SCHEDULE.
2. THE NUMBER OF INSTALLATION ANCHORS DEPICTED IS THE MINIMUM NUMBER OF ANCHORS TO BE USED FOR PRODUCT INSTALLATION OF THE MAXIMUM SIZE LISTED.
3. INSTALL INDIVIDUAL INSTALLATION ANCHORS WITHIN A TOLERANCE OF ±1/2 INCH THE DEPICTED LOCATION & SPACING IN THE ANCHOR LAYOUT DETAILS (I.E., WITHOUT CONSIDERATION OF TOLERANCES). TOLERANCES ARE NOT CUMULATIVE FROM ONE INSTALLATION ANCHOR TO THE NEXT.
4. SHIM AS REQUIRED AT EACH INSTALLATION ANCHOR WITH LOAD BEARING SHIM(S). MAXIMUM ALLOWABLE SHIM STACK TO BE 1/4 INCH. SHIM WHERE SPACE OF 1/16 INCH OR GREATER OCCURS. SHIM(S) SHALL BE CONSTRUCTED OF HIGH DENSITY PLASTIC OR BETTER.
5. FOR MASONRY OR CONCRETE OPENINGS, 1X WOOD BUCK MAY BE USED (OPTIONAL AS LONG AS THE MINIMUM EMBEDMENT AND EDGE DISTANCE REQUIREMENTS ARE STILL MET WITHIN THE CORRESPONDING HOST SUBSTRATE.) SEE GENERAL NOTE #3 ON SHEET 1 FOR MORE INFORMATION.
6. MINIMUM EMBEDMENT AND EDGE DISTANCE EXCLUDE WALL FINISHES, INCLUDING BUT NOT LIMITED TO STUCCO, FOAM, BRICK VENEER, AND SIDING.
7. INSTALLATION ANCHORS AND ASSOCIATED HARDWARE MUST BE MADE OF CORROSION RESISTANT MATERIAL OR HAVE A CORROSION RESISTANT COATING.
   - 7.1. FASTENERS USED WITHIN 3,000 FEET OF A SALTWATER COASTLINE AND INSTALLED IN ENCLOSED SPACES SHALL BE GALVANIZED IN ACCORDANCE WITH SECTION 1711.1.1 (E.G., ASTM A153 CLASS D, ASTM A641 CLASS 3S, OR EQUIVALENT CORROSION RESISTANCE).
   - 7.2. CONNECTORS AND METAL PLATES USED WITHIN 3,000 FEET OF A SALTWATER COASTLINE SHALL BE STANDARD GALVANIZED IN ACCORDANCE WITH SECTION 1711.1.2 (E.G., ASTM A653 G90, ASTM A123, OR PROTECTIVE COATING PER TPI 1).
8. FOR HOLLOW BLOCK AND GROUT FILLED BLOCK, DO NOT INSTALL INSTALLATION ANCHORS INTO MORTAR JOINTS. EDGE DISTANCE IS MEASURED FROM FREE EDGE OF BLOCK OR EDGE OF MORTAR JOINT INTO FACE SHELL OF BLOCK.
9. INSTALLATION ANCHORS SHALL BE INSTALLED IN ACCORDANCE WITH ANCHOR MANUFACTURER'S INSTALLATION INSTRUCTIONS, AND ANCHORS SHALL NOT BE USED IN SUBSTRATES WITH STRENGTHS LESS THAN THE MINIMUM STRENGTH SPECIFIED BY THE ANCHOR MANUFACTURER.

ANCHOR SCHEDULE

| METHOD | SUBSTRATE | ANCHOR TYPE | MIN EMBEDMENT | MIN. EDGE DISTANCE | MIN. SPACING |
|---|---|---|---|---|---|
| THROUGH FRAME | WOOD: MIN. SG = 0.55 | #14 WOOD SCREW | 1.5" | 0.75" | 2.50" |
| | METAL: 18 GAUGE STEEL, MIN. Fy = 33KSI | #12 SELF DRILLING OR SELF TAPPING SCREW | 3 THREADS MIN PENETRATION BEYOND METAL | 0.50" | |
| | METAL: 1/8" MIN. THICKNESS ALUMINUM MIN. 6063-T5 | | | | |
| | CONCRETE: f'c=3000PSI | 1/4" ITW TAPCON | 1.25" | 2.00" | |
| | MASONRY: CMU per ASTM C90 | | | | |

euro-wall
SUPERIOR BY DESIGN
EURO-WALL, LLC
P.O. BOX 8007,
NORTH PORT, FL 34290
PH: 888-989-3876

TITLE: MS MULTI-SLIDE SYSTEM (WZ3) (IMPACT)
ANCHOR DETAILS, INSTALLATION NOTES, & ANCHOR SCHEDULE

PREPARED BY:
BUILDING DROPS, INC.
1900 NE MIAMI COURT, SUITE 2-15
MIAMI, FL 33132
PH: (954) 399-8478
FAX: (954) 744-4738
WEB: www.buildingdrops.com

| REMARKS | BY | DATE |
|---|---|---|
| | | |
| | | |
| | | |
| | | |

THE INSTALLATION DETAILS DESCRIBED HEREIN ARE GENERIC AND MAY NOT REFLECT ACTUAL CONDITIONS FOR A SPECIFIC SITE. IF SITE CONDITIONS CAUSE INSTALLATION TO DEVIATE FROM THE REQUIREMENTS DETAILED HEREIN, A LICENSED ENGINEER OR ARCHITECT SHALL PREPARE SITE SPECIFIC DOCUMENTS FOR USE WITH THIS DOCUMENT.

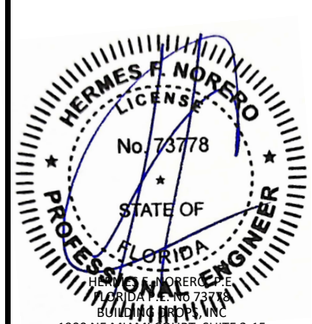


HERMES F. NORERO, P.E.
FLORIDA P.E. No. 73778
BUILDING DROPS, INC
1900 NE MIAMI COURT, SUITE 2-15
MIAMI, FL 33132
FBPE CERT. OF AUTHORIZATION No. 29578

FL #: FL48363

DATE: 10.01.2026

DWG. BY: JR | CHK. BY: HFN

SCALE: NTS

DWG. #: EWS060

SHEET: 9 | REV. 0

OF 14

10/20/2026 12:48 PM

c:\users\julianarodriguez\building drops, inc\building drops landing - documents\common\projects\euro-wall, llc\fbc-26-0943 - euro-wall ms - multi-slide door - nafs\dwgs\ews060.dwg

## BILL OF MATERIALS

| NO | PART # | DESCRIPTION | MATERIAL |
|---|---|---|---|
| 1 | E0008 | SASH | 6063-T5 |
| 2 | E0009 | INTERLOCK | 6063-T5 |
| 3 | E0094 | ASTRAGAL | 6063-T5 |
| 4 | E0097 | 0.625" X 3.50" STEEL REINFORCEMENT | STEEL |
| 5 | E0064 | IG BEAD | 6063-T5 |
| 6 | E0065 | INTERLOCK REDUCER | 6063-T5 |
| 7 | E0093 | 9/16" BOX BEAD | 6063-T5 |
| 8 | E0014 | OUT-CORNER ASTRAGAL | 6063-T5 |
| 9 | E0124 | IN-CORNER ASTRAGAL | 6063-T5 |
| 10 | E0011 | POCKET INTERLOCK | 6063-T5 |
| 11 | E0039 | POCKET END CAP | 6063-T5 |
| 18 | E0015 | 2-TRACK FRAME: THERMALLY BROKEN | 6063-T5 |
| 19 | E0016 | 3-TRACK FRAME: THERMALLY BROKEN | 6063-T5 |
| 20 | E0012 | ROLLER TRACK | 6063-T5 |
| 21 | E0013 | MS JAMB TRIM | 6063-T5 |
| 22 | E0018 | 4-TRACK FRAME: THERMALLY BROKEN | 6063-T5 |
| *23 | E0019 | 5-TRACK FRAME: THERMALLY BROKEN | 6063-T5 |
| 24 | E0167 | 2-TRACK ADD-ON | 6063-T5 |
| 25 | E0117 | 2-TRACK FRAME: NON-THERMALLY BROKEN | 6063-T5 |
| 26 | E0118 | 3-TRACK FRAME: NON-THERMALLY BROKEN | 6063-T5 |
| 27 | E0109 | INTERMEDIATE TRACK FILLER | 6063-T5 |
| 28 | E0040 | CONDENSATION DRAIN / DRIP CAP | 6063-T5 |
| 29 | E0365 | 5/8" RISER ADD-ON | 6063-T5 |
| 30 | E0367 | 5/8" RISER | 6063-T5 |
| 31 | E0237 | 1.00" RISER ADD-ON | 6063-T5 |
| 32 | E0243 | 1.00" RISER | 6063-T5 |
| 33 | E0096 | POCKET HOOK MOUNT | 6063-T5 |
| 39 | C0034 | M4.2 X 13 MM DIN7982-A2 TYPE C | STAINLESS STEEL |
| 40 | C0037 | #10 X 3/4" PHILLIPS PH TEK SCREW | STAINLESS STEEL |
| 41 | C0073 | #10 X 1.00" PHILLIPS PH TEK SCREW | STAINLESS STEEL |
| 42 | C0045 | 1/4"-20 X 3/4" PHILLIPS FH MACHINE SCREW | STAINLESS STEEL |
| 43 | C0046 | 1/4"-20 X 1.00" PHILLIPS FH MACHINE SCREW | STAINLESS STEEL |
| 49 | C0383 | DOWSIL995 STRUCTURAL SEALANT | SILICONE |
| 50 | C0423 | 100% SILICONE, NEUTRAL CURE | SILICONE |
| 51 | C0424 | SIKAFLEX 221 | POLYURETHANE |
| 54 | C0143 | 1.00" X 2.00" X 0.25" ADHESIVE SETTING BLOCK | NEOPRENE |
| 55 | C0144 | 1.00" X 2.00" X 0.125" ADHESIVE SETTING BLOCK | NEOPRENE |
| 56 | C0147 | 1.00" X 2.00" X 0.0625" ADHESIVE SETTING BLOCK | NEOPRENE |
| 59 | C0029 | FRAME CORNER KEY | VARIES |
| 60 | C0033 | 1/2" HOLE PLUG | NYLON |
| 61 | C0035 | FULL EMBED. WATER MANAGEMENT KIT | VARIES |
| 62 | C0036 | 3/8" FIN SEAL WEATHERSTRIP | POLYPROPYLENE |
| 63 | C0044 | 1/4" BULB GASKET | POLYPROPYLENE |
| 64 | C0056 | 9/16" BEDDING GASKET | EPDM |
| 65 | C0082 | 1-1/4" IG BEDDING GASKET | EPDM |
| 66 | C0048 | ROLLER ASSEMBLY | VARIES |
| 67 | C0083 | FIXED ROLLER ASSEMBLY | VARIES |
| 68 | C0061 | LOCKING LEVER | STEEL |
| 69 | C0080 | PANEL MITER CORNER KEY | VARIES |
| 70 | C0142 | PANEL BLOCK CORNER KEY | 6063-T5 |
| 71 | C0081 | LOCKING TRANSMISSION | ZAMAC |
| 72 | C0548 | PAWL CATCH | ZAMAC |
| 73 | C0549 | PAWL ASSEMBLY | ZAMAC, BRASS |
| 74 | C0171 | POLYAMIDE CONNECTING ROD | GLASS FILLED NYLON |
| 75 | C0084 | WEEP HOLE COVER | NYLON |
| 76 | C0026 | HEADER WEATHERSTRIP HOLDER | NYLON |
| 77 | C0349 | DRAIN HOLE COVER | NYLON |
| 78 | C0697 | FRAME ALIGNMENT CORNER KEY | 6063-T5 |
| 79 | C0163 | ASTRAGAL END CAP: FOR HOLLOW | NYLON |
| 80 | C0178 | ASTRAGAL END CAP: FOR FIN CHANNEL | NYLON |
| 81 | C0345 | ASTRAGAL BOTTOM D.L.O. GAP FILLER LEFT | NYLON |
| 82 | C0346 | ASTRAGAL BOTTOM D.L.O. GAP FILLER RIGHT | NYLON |
| 83 | C0347 | ASTRAGAL TOP D.L.O. GAP FILLER | NYLON |
| 84 | C0194 | MITER STILE ALIGNMENT CORNER KEY | STAINLESS STEEL |
| 85 | C0315 | VENTED HOLE COVER | NYLON |
| 86 | C0337 | DRAIN INSERT | NYLON |
| 87 | C0042 | LARGE DOOR BUMPER | NYLON |
| 88 | C0350 | INTERLOCK END CAP | NYLON |
| 89 | C0032 | E0040 END CAPS | NYLON |
| 90 | C0681 | E0367 END CAPS | NYLON |
| 91 | C0682 | E0243 END CAPS | NYLON |
| 92 | C0683 | E0365 END CAPS | NYLON |
| 93 | C0684 | E0237 END CAPS | NYLON |
| 94 | C0085 | POCKET INTERLOCK END CAPS | NYLON |
| 95 | C0086 | POCKET A COVER | NYLON |
| 96 | C0087 | POCKET B COVER | NYLON |
| 97 | C0088 | POCKET UPPER PLUG | LOW DENSITY FOAM |
| 98 | C0089 | POCKET LOWER PLUG | LOW DENSITY FOAM |
| 99 | C0090 | POCKET PLUG HOLDER WITH GUIDE | NYLON |
| 100 | C0338 | POCKET COVER A: 1.00" RISER | NYLON |
| 101 | C0339 | POCKET COVER B: 1.00" RISER | NYLON |
| 102 | C0340 | POCKET INTERLOCK END CAP A: 1.00" RISER | NYLON |
| 103 | C0341 | POCKET INTERLOCK END CAP B: 1.00" RISER | NYLON |
| 104 | C0342 | POCKET FRAME GAP FILLER | NYLON |

euro-wall
SUPERIOR BY DESIGN

EURO-WALL, LLC
P.O. BOX 8007,
NORTH PORT, FL 34290
PH: 888-989-3876

TITLE: MS MULTI-SLIDE SYSTEM (WZ3) (IMPACT)

BILL OF MATERIALS

PREPARED BY:
BUILDING DROPS, INC.
1900 NE MIAMI COURT, SUITE 2-15
MIAMI, FL 33132
PH: (954) 399-8478
FAX: (954) 744-4738
WEB: www.buildingdrops.com

| REMARKS | BY | DATE |
|---|---|---|
| | | |
| | | |
| | | |
| | | |

THE INSTALLATION DETAILS DESCRIBED HEREIN ARE GENERIC AND MAY NOT REFLECT ACTUAL CONDITIONS FOR A SPECIFIC SITE. IF SITE CONDITIONS CAUSE INSTALLATION TO DEVIATE FROM THE REQUIREMENTS DETAILED HEREIN, A LICENSED ENGINEER OR ARCHITECT SHALL PREPARE SITE SPECIFIC DOCUMENTS FOR USE WITH THIS DOCUMENT.

HERMES F. NORERO LICENSE No. 73778 STATE OF FLORIDA PROFESSIONAL ENGINEER

HERMES F. NORERO P.E.
FLORIDA P.E. No. 73778
BUILDING DROPS, INC
1900 NE MIAMI COURT, SUITE 2-15
MIAMI, FL 33132
FBPE CERT. OF AUTHORIZATION No. 29578

FL #: FL48363

DATE: 10.01.2026

DWG. BY: JR | CHK. BY: HFN

SCALE: NTS

DWG. #: EWS060

SHEET: 10 OF 14

REV. 0

10/20/2026 12:48 PM
c:\users\julianarodriguez\building drops, inc\building drops landing - documents\common\projects\euro-wall, llc\fbc-26-0943 - euro-wall ms - multi-slide door - nafs\dwgs\ews060.dwg

1 SASH
6063-T5

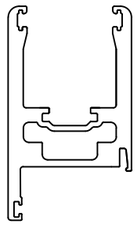

2 INTERLOCK
6063-T5

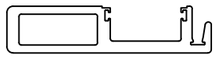

3 ASTRAGAL
6063-T5

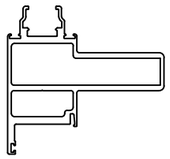

4 0.625" X 3.50" STEEL REINFORCEMENT
STEEL

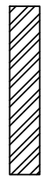

5 IG BEAD
6063-T5



6 INTERLOCK REDUCER
6063-T5



7 9/16" BOX BEAD
6063-T5



8 OUT-CORNER ASTRAGAL
6063-T5

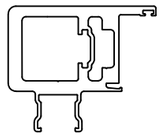

9 IN-CORNER ASTRAGAL
6063-T5

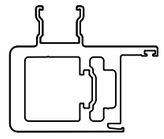

10 POCKET INTERLOCK
6063-T5



11 POCKET END CAP
6063-T5



18 2-TRACK FRAME: THERMALLY BROKEN
6063-T5

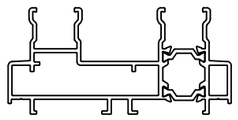

19 3-TRACK FRAME: THERMALLY BROKEN
6063-T5

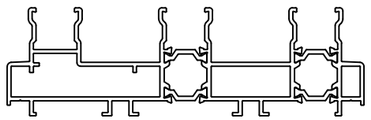

20 ROLLER TRACK
6063-T5



21 MS JAMB TRIM
6063-T5

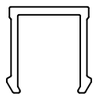

22 4-TRACK FRAME THERMALLY BROKEN
6063-T5

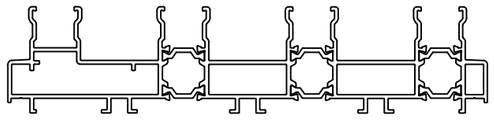

*23 5-TRACK FRAME THERMALLY BROKEN
6063-T5

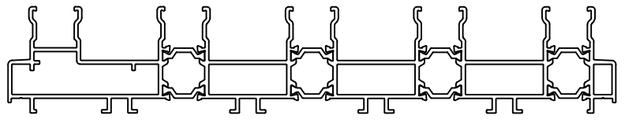

24 2-TRACK ADD ON
6063-T5

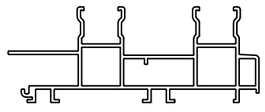

25 2-TRACK FRAME: NON-THERMALLY BROKEN
6063-T5

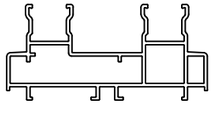

26 3-TRACK FRAME: NON-THERMALLY BROKEN
6063-T5

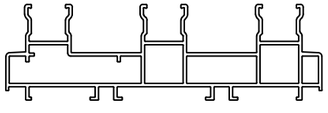

27 INTERMEDIATE TRACK FILLER
6063-T5



euro-wall
SUPERIOR BY DESIGN

EURO-WALL, LLC
P.O. BOX 8007,
NORTH PORT, FL 34290
PH: 888-989-3876

TITLE: MS MULTI-SLIDE SYSTEM (WZ3) (IMPACT)
COMPONENTS

PREPARED BY:
BUILDING DROPS, INC.
1900 NE MIAMI COURT, SUITE 2-15
MIAMI, FL 33132
PH: (954) 399-8478
FAX: (954) 744-4738
WEB: www.buildingdrops.com

| REMARKS | BY | DATE |
|---|---|---|
| | | |
| | | |
| | | |
| | | |

THE INSTALLATION DETAILS DESCRIBED HEREIN ARE GENERIC AND MAY NOT REFLECT ACTUAL CONDITIONS FOR A SPECIFIC SITE. IF SITE CONDITIONS CAUSE INSTALLATION TO DEVIATE FROM THE REQUIREMENTS DETAILED HEREIN, A LICENSED ENGINEER OR ARCHITECT SHALL PREPARE SITE SPECIFIC DOCUMENTS FOR USE WITH THIS DOCUMENT.

HERMES F. NORERO LICENSE No. 73778 STATE OF FLORIDA PROFESSIONAL ENGINEER

HERMES F. NORERO P.E.
FLORIDA P.E. No. 73778
BUILDING DROPS, INC
1900 NE MIAMI COURT, SUITE 2-15
MIAMI, FL 33132
FBPE CERT. OF AUTHORIZATION No. 29578

FL #: FL48363

DATE: 10.01.2026

DWG. BY: JR | CHK. BY: HFN

SCALE: NTS

DWG. #: EWS060

SHEET: 11 | REV. 0

10/20/2026 12:48 PM

c:\users\julianarodriguez\building drops, inc\building drops landing - documents\common\projects\euro-wall, llc\fbc-26-0943 - euro-wall ms - multi-slide door - nafs\dwgs\ews060.dwg

28 CONDENSATION DRAIN / DRIP CAP
6063-T5



29 5/8" RISER ADD-ON
6063-T5



30 5/8" RISER
6063-T5



31 1.00" RISER ADD-ON
6063-T5

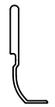

32 1.00" RISER
6063-T5



33 POCKET HOOK MOUNT
6063-T5



59 FRAME CORNER KEY
VARIES

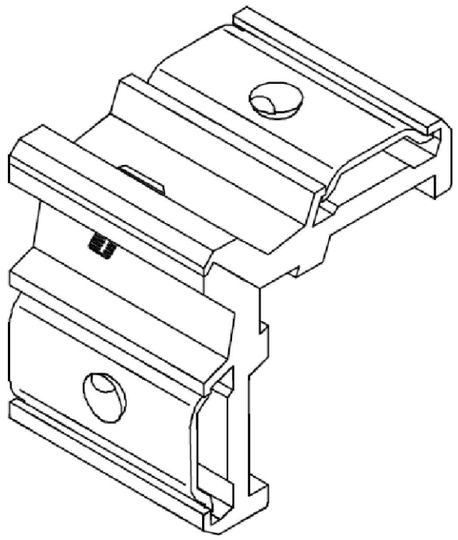

60 1/2" HOLE PLUG
NYLON



62 3/8" FIN SEAL WEATHERSTRIP
POLYPROPYLENE



63 1/4" BULB GASKET
POLYPROPYLENE



64 9/16" BEDDING GASKET
EPDM

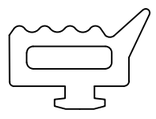

65 1-1/4" IG BEDDING GASKET
EPDM



66 ROLLER ASSEMBLY
VARIES

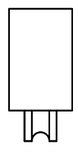

67 FIXED ROLLER ASSEMBLY
VARIES

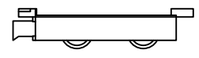

68 LOCKING LEVER
STEEL



69 PANEL MITER CORNER KEY
VARIES

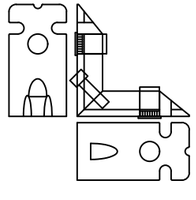

70 PANEL BLOCK CORNER KEY
6063-T5

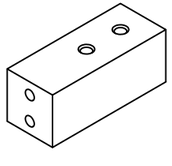

71 LOCKING TRANSMISSION
ZAMAC

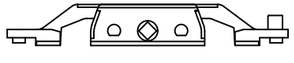

72 PAWL CATCH
ZAMAC



euro-wall
SUPERIOR BY DESIGN

EURO-WALL, LLC
P.O. BOX 8007,
NORTH PORT, FL 34290
PH: 888-989-3876

TITLE: MS MULTI-SLIDE SYSTEM (WZ3) (IMPACT)
COMPONENTS

PREPARED BY:
BUILDING DROPS, INC.
1900 NE MIAMI COURT, SUITE 2-15
MIAMI, FL 33132
PH: (954) 399-8478
FAX: (954) 744-4738
WEB: www.buildingdrops.com

| REMARKS | BY | DATE |
|---|---|---|
| | | |
| | | |
| | | |
| | | |

THE INSTALLATION DETAILS DESCRIBED HEREIN ARE GENERIC AND MAY NOT REFLECT ACTUAL CONDITIONS FOR A SPECIFIC SITE. IF SITE CONDITIONS CAUSE INSTALLATION TO DEVIATE FROM THE REQUIREMENTS DETAILED HEREIN, A LICENSED ENGINEER OR ARCHITECT SHALL PREPARE SITE SPECIFIC DOCUMENTS FOR USE WITH THIS DOCUMENT.

HERMES F. NORERO LICENSE No. 73778 STATE OF FLORIDA PROFESSIONAL ENGINEER

HERMES F. NORERO P.E.
FLORIDA P.E. No. 73778
BUILDING DROPS, INC
1900 NE MIAMI COURT, SUITE 2-15
MIAMI, FL 33132
FBPE CERT. OF AUTHORIZATION No. 29578

FL #: FL48363

DATE: 10.01.2026

DWG. BY: JR | CHK. BY: HFN

SCALE: NTS

DWG. #: EWS060

SHEET: 12 OF 14

REV. 0

10/20/2026 12:48 PM
c:\users\julianarodriguez\building drops, inc\building drops landing - documents\common\projects\euro-wall, llc\fbc-26-0943 - euro-wall ms - multi-slide door - nafs\dwgs\ews060.dwg

73 PAWL ASSEMBLY
ZAMAC, BRASS

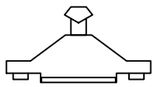

74 POLYAMIDE CONNECTING ROD
GLASS FILLED NYLON



75 WEEP HOLE COVER
NYLON



76 HEADER WEATHERSTRIP HOLDER
NYLON

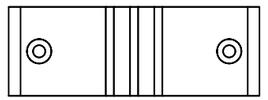

77 DRAIN HOLE COVER
NYLON

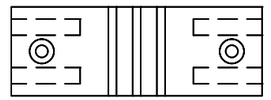

78 FRAME ALIGNMENT CORNER KEY
6063-T5



79 ASTRAGAL END CAP: FOR HOLLOW
NYLON

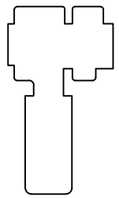

80 ASTRAGAL END CAP: FOR FIN CHANNEL
NYLON

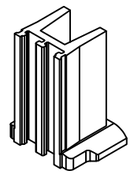

81 ASTRAGAL BOTTOM D.L.O. GAP FILLER LEFT
NYLON

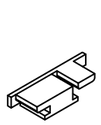

82 ASTRAGAL BOTTOM D.L.O. GAP FILLER RIGHT
NYLON

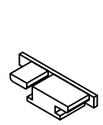

83 ASTRAGAL TOP D.L.O. GAP FILLER
NYLON

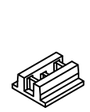

84 MITER STILE ALIGNMENT CORNER KEY
STAINLESS STEEL

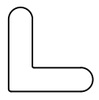

85 VENTED HOLE COVER
NYLON



86 DRAIN INSERT
NYLON

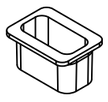

87 LARGE DOOR BUMPER
NYLON

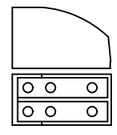

88 INTERLOCK END CAP
NYLON

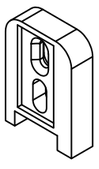

89 E0040 END CAPS
NYLON

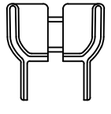

90 E0367 END CAPS
NYLON

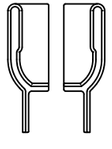

91 E0243 END CAPS
NYLON

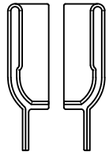

92 E0365 END CAPS
NYLON



93 E0237 END CAPS
NYLON

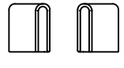

euro-wall
SUPERIOR BY DESIGN

EURO-WALL, LLC
P.O. BOX 8007,
NORTH PORT, FL 34290
PH: 888-989-3876

TITLE: MS MULTI-SLIDE SYSTEM (WZ3) (IMPACT)
COMPONENTS

PREPARED BY:
BUILDING DROPS, INC.
1900 NE MIAMI COURT, SUITE 2-15
MIAMI, FL 33132
PH: (954) 399-8478
FAX: (954) 744-4738
WEB: www.buildingdrops.com

| REMARKS | BY | DATE |
|---|---|---|
| | | |
| | | |
| | | |
| | | |

THE INSTALLATION DETAILS DESCRIBED HEREIN ARE GENERIC AND MAY NOT REFLECT ACTUAL CONDITIONS FOR A SPECIFIC SITE. IF SITE CONDITIONS CAUSE INSTALLATION TO DEVIATE FROM THE REQUIREMENTS DETAILED HEREIN, A LICENSED ENGINEER OR ARCHITECT SHALL PREPARE SITE SPECIFIC DOCUMENTS FOR USE WITH THIS DOCUMENT.

HERMES F. NORERO LICENSE No. 73778 STATE OF FLORIDA PROFESSIONAL ENGINEER

HERMES F. NORERO P.E.
FLORIDA P.E. No. 73778
BUILDING DROPS, INC
1900 NE MIAMI COURT, SUITE 2-15
MIAMI, FL 33132
FBPE CERT. OF AUTHORIZATION No. 29578

FL #: FL48363

DATE: 10.01.2026

DWG. BY: JR | CHK. BY: HFN

SCALE: NTS

DWG. #: EWS060

SHEET: 13 | REV. 0

10/20/2026 12:48 PM

c:\Users\julianarodriguez\building drops, inc\building drops landing - documents\common\projects\euro-wall_llc\fbc-26-0943 - euro-wall ms - multi-slide door - nafs\dwgs\ews060.dwg

94 POCKET INTERLOCK END CAPS
NYLON

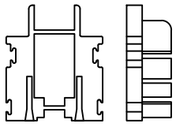

95 POCKET A COVER
NYLON

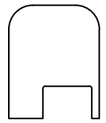

96 POCKET B COVER
NYLON

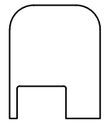

97 POCKET UPPER PLUG
LOW DENSITY FOAM



98 POCKET LOWER PLUG
LOW DENSITY FOAM



99 POCKET PLUG HOLDER WITH GUIDE
NYLON

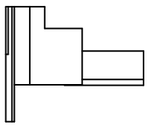

100 POCKET COVER A: 1.00" RISER
NYLON

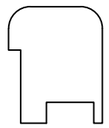

101 POCKET COVER B: 1.00" RISER
NYLON

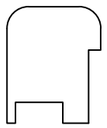

102 POCKET INTERLOCK END CAP A: 1.00" RISER
NYLON

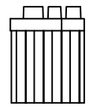

103 POCKET INTERLOCK END CAP B: 1.00" RISER
NYLON

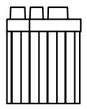

104 POCKET FRAME GAP FILLER
NYLON

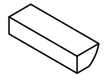

euro-wall
SUPERIOR BY DESIGN

EURO-WALL, LLC
P.O. BOX 8007,
NORTH PORT, FL 34290
PH: 888-989-3876

TITLE: MS MULTI-SLIDE SYSTEM (WZ3) (IMPACT)
COMPONENTS

PREPARED BY:
BUILDING DROPS, INC.
1900 NE MIAMI COURT, SUITE 2-15
MIAMI, FL 33132
PH: (954) 399-8478
FAX: (954) 744-4738
WEB: www.buildingdrops.com

| REMARKS | BY | DATE |
|---|---|---|
| | | |
| | | |
| | | |
| | | |

THE INSTALLATION DETAILS DESCRIBED HEREIN ARE GENERIC AND MAY NOT REFLECT ACTUAL CONDITIONS FOR A SPECIFIC SITE. IF SITE CONDITIONS CAUSE INSTALLATION TO DEVIATE FROM THE REQUIREMENTS DETAILED HEREIN, A LICENSED ENGINEER OR ARCHITECT SHALL PREPARE SITE SPECIFIC DOCUMENTS FOR USE WITH THIS DOCUMENT.

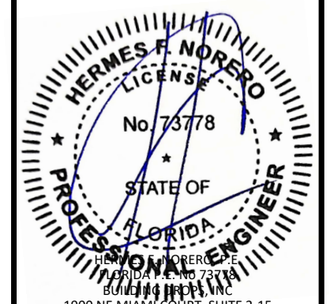


HERMES F. NORERO, P.E.
FLORIDA P.E. No. 73778
BUILDING DROPS, INC.
1900 NE MIAMI COURT, SUITE 2-15
MIAMI, FL 33132
FBPE CERT. OF AUTHORIZATION No. 29578

FL #: FL48363

DATE: 10.01.2026

DWG. BY: JR | CHK. BY: HFN

SCALE: NTS

DWG. #: EWS060

SHEET: 14 OF 14 | REV. 0