intertek
Total Quality. Assured.

DREXEL METALS, INC.
FLORIDA BUILDING CODE TEST REPORT

SCOPE OF WORK
TAS 202, AND TAS 203 TESTING ON 0.032" (MIN.) ALUMINUM FWQ100 FLUSH & REVEAL SOFFIT PANELS

REPORT NUMBER
T2025.03-450-18 R1

TEST DATE(S)
07/31/25 – 08/07/25

ISSUE DATE 01/27/26
REVISION DATE 02/02/26

LABORATORY CERTIFICATION NO.
22-0428.13

PAGES
15

DOCUMENT CONTROL NUMBER
RT-R-AMER-Test-2816 (06/21/24)
© 2017 INTERTEK

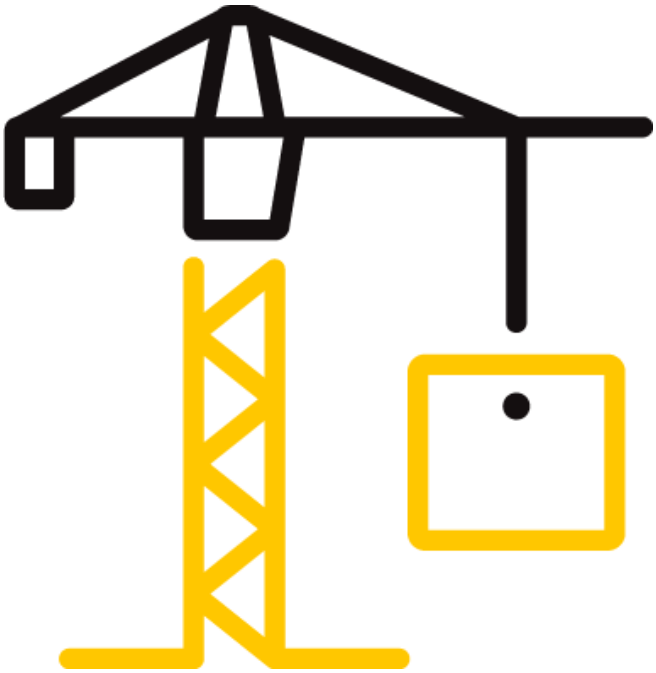

intertek
Total Quality. Assured.

2658 Electronics Way
West Palm Beach, Florida 33407

Telephone: 561-881-0020
Facsimile: 717-764-4129
www.intertek.com/building

TEST REPORT FOR DREXEL METALS, INC.

Report No.: T2025.03-450-18 R1
Date: 01/27/26 Revised: 02/02/26

REPORT ISSUED TO

DREXEL METALS, INC.
1234 Gardiner Lane, Louisville, KY 40213

SECTION 1

SCOPE

This test report is a reissue of the original Report No. S6488.01-450-18 R0. This report is issued in the name of Drexel Metals, Inc., on the .032 (Min.) Aluminum FWQ100 Flush & Reveal Soffit Panels through written authorization of Petersen Aluminum Corporation.

Architectural Testing, Inc. (an Intertek company) dba Intertek Building & Construction (B&C) was contracted by Petersen Aluminum Corporation to perform TAS 202, and TAS 203 testing in accordance with Florida Building Code for High Velocity Hurricane Zone requirements on their 0.032" Aluminum FWQ100 Flush & Reveal Soffit Panels. Results obtained are tested values and were secured by using the designated test method(s). Testing was conducted at the Intertek B&C test facility in West Palm Beach, FL. This report does not constitute certification of this product nor an opinion or endorsement by this laboratory.

SECTION 2

SUMMARY OF TEST RESULTS

The specimen(s) tested met the performance requirements set forth in the protocols.

Product Type: Aluminum FWQ100 Flush & Reveal Soffit Panels

SPEC.	TEST PROTOCOL	DESIGN PRESSURE
1	TAS 202	+100.0 / -100.0 psf
2	TAS 203	+100.0 / -100.0 psf
3	TAS 203	+100.0 / -100.0 psf
4	TAS 203	+100.0 / -100.0 psf

TANYA A. DOLBY
LICENSE
No. 93536
STATE OF
FLORIDA
PROFESSIONAL ENGINEER

For INTERTEK B&C:

COMPLETED BY:	Daniel Carroll	**REVIEWED BY:**	Tanya Dolby, P.E.
TITLE:	Senior Regional Manager	**TITLE:**	Engineering Manager – Engineering Services
SIGNATURE:	Digitally Signed by: Daniel J. Carroll	**SIGNATURE:**	Digitally Signed by: Tanya Dolby 2026.02.03 17:50:45-05'00'
DATE:	02/02/26	**DATE:**	02/02/26

This report is for the exclusive use of Intertek's Client and is provided pursuant to the agreement between Intertek and its Client. Intertek's responsibility and liability are limited to the terms and conditions of the agreement. Intertek assumes no liability to any party, other than to the Client in accordance with the agreement, for any loss, expense or damage occasioned by the use of this report. Only the Client is authorized to permit copying or distribution of this report and then only in its entirety. Any use of the Intertek name or one of its marks for the sale or advertisement of the tested material, product or service must first be approved in writing by Intertek. The observations and test results in this report are relevant only to the sample(s) tested. This report by itself does not imply that the material, product, or service is or has ever been under an Intertek certification program.

2658 Electronics Way
West Palm Beach, Florida 33407

Telephone: 561-881-0020
Facsimile: 717-764-4129
www.intertek.com/building

SECTION 3
TEST METHOD(S)

The specimens were evaluated in general accordance with the following:

TAS 202-94, *Criteria for Testing Impact & Non Impact Resistant Building Envelope Components Using Uniform Static Air Pressure* – Only structural loads were performed.

TAS 203-94, *Criteria for Testing Products Subject to Cyclic Wind Pressure Loading* – Impacts were not performed.

SECTION 4
MATERIAL SOURCE/INSTALLATION

Test specimens were provided by the client. Representative samples of the test specimen(s) will be retained by Intertek B&C for a minimum of four years from the test completion date.

The specimens were installed into a Southern Yellow Pine test buck. Installation of the tested product was performed by the client.

SECTION 5
EQUIPMENT

Timing Device: Electronic beam type
Cycling Mechanism: Computer controlled centrifugal blower with electronic pressure measuring device
Deflection Measuring Device: Linear transducers

SECTION 6
LIST OF OFFICIAL OBSERVERS

NAME	COMPANY
Sal Delfino	Petersen Aluminum Corporation
Seth Allen	Intertek B&C
Charles Gilbert	Intertek B&C
Kevin Jones	Intertek B&C

intertek
Total Quality. Assured.

2658 Electronics Way
West Palm Beach, Florida 33407

Telephone: 561-881-0020
Facsimile: 717-764-4129
www.intertek.com/building

SECTION 7
TEST SPECIMEN DESCRIPTION

Product Type: Aluminum FWQ100 Flush & Reveal Soffit Panels

Product Size(s):

PANEL SIZE	WIDTH		HEIGHT	
	millimeters	inches	millimeters	inches
Panel	304	12	2438	72

The following description applies to all specimens.

Test Deck Construction:
The 98" wide by 72"high Buck was constructed from Southern Yellow Pine 2 x 12 nominal lumber. 2x4 Southern Yellow Pine joists were spaced 24" on center and were secured to the perimeter using four #8 x 3" long Torx flat head screws at each end. 1x4 pressure treated battens were installed over the 2x4 joist at 12” O.C.

Soffit System:

Components	details	attachment method
Clip	The clips were constructed from 24 Ga stainless steel and were 1-1/2” wide x 1-3/8” long. They were spaced at 12" on center.	Each clip was attached using a #10 x 1-1/2" pancake head fastener.
0.032” Aluminum Soffit panel	The panels were constructed from 0.032” Aluminum panel and had an 12" coverage width. Six full panels were tested.	The male leg of the panels was secured to the 1x4 pressure treated battens with clips spaced 12” on center. The female leg of the panels snapped onto the clip.

intertek
Total Quality. Assured.

2658 Electronics Way
West Palm Beach, Florida 33407

Telephone: 561-881-0020
Facsimile: 717-764-4129
www.intertek.com/building

SECTION 8
TEST RESULTS

Protocol TAS 202-94, *Static Air Pressure*

Test Date(s): 07/31/25
The temperature during testing was 84°F. The results are tabulated as follows:

Test Specimen #1: Preload and Design Load per TAS 202

LOAD (psf)	INDICATOR LOCATION	DEFLECTION (in.)		PERMANENT SET (in.)	
		MEASURED	NET	MEASURED	NET
+75.00 50% of Test Pressure	1	0.98	<0.01	0.21	<0.01
	2	0.53		0.07	
	3	0.71		0.09	
	4	1.60	0.08	0.17	<0.01
	5	1.45		0.17	
	6	1.13		0.21	
+100.00 Design Pressure	1	1.06	<0.01	0.21	<0.01
	2	0.63		0.09	
	3	0.95		0.12	
	4	1.83	0.06	0.21	<0.01
	5	1.62		0.22	
	6	1.30		0.34	
-75.00 50% of Test Pressure	1	0.70	<0.01	0.19	<0.01
	2	0.52		0.10	
	3	0.71		0.12	
	4	0.66	<0.01	0.11	0.04
	5	0.67		0.15	
	6	0.70		0.12	
-100.00 Design Pressure	1	0.88	<0.01	0.24	<0.01
	2	0.73		0.13	
	3	0.95		0.17	
	4	0.88	0.06	0.17	0.12
	5	0.95		0.30	
	6	0.90		0.19	

intertek
Total Quality. Assured.

2658 Electronics Way
West Palm Beach, Florida 33407

Telephone: 561-881-0020
Facsimile: 717-764-4129
www.intertek.com/building

TEST REPORT FOR DREXEL METALS, INC.
Report No.: T2025.03-450-18 R1
Date: 01/27/26 Revised: 02/02/26

Test Specimen #1: Structural Overload Load per TAS 202

LOAD (psf)	INDICATOR LOCATION	DEFLECTION (in.)		PERMANENT SET (in.)	
		MEASURED	NET	MEASURED	NET
+150.00 Test Pressure	1	1.26	<0.01	0.24	<0.01
	2	0.83		0.16	
	3	1.42		0.20	
	4	2.25	0.02	0.28	<0.01
	5	1.90		0.29	
	6	1.52		0.47	
-150.00 Test Pressure	1	0.97	<0.01	0.29	<0.01
	2	0.94		0.15	
	3	1.01		0.23	
	4	1.02	0.21	0.21	0.20
	5	1.27		0.40	
	6	1.10		0.21	

Note 1: *Positive and negative uniform static load test loads were held for 30 seconds.*

Note 2: *Tape and film were used to seal against air leakage during structural testing. In our opinion, the tape and film did not influence the results of the test.*

Note 3: *See Sketch #1 for indicator locations. Deflection/permanent set reported is the overall deflection between three points (longest unsupported span) which accounts for support movement.*

intertek
Total Quality. Assured.

2658 Electronics Way
West Palm Beach, Florida 33407

Telephone: 561-881-0020
Facsimile: 717-764-4129
www.intertek.com/building

TEST REPORT FOR DREXEL METALS, INC.
Report No.: T2025.03-450-18 R1
Date: 01/27/26 Revised: 02/02/26

Protocol TAS 203-94, *Cyclic Wind Pressure Loading*

Test Date(s): 08/06/25 through 08/07/25
The temperature during testing was 84°F - 86°F. The results are tabulated as follows:

Test Specimen #1: Cyclic Test Spectrum and Average Cycle Time per TAS 203

DESIGN PRESSURE	**STAGE**		
+100.0 / -100.0 psf	**1**	**2**	**3**
POSITIVE PRESSURE RANGE (psf)	0 – 50.0	0 – 60.0	0 – 130.0
AVERAGE CYCLE TIME (sec.)	3.6	4.0	1.0
NUMBER OF CYCLES	600	70	1
	4	**5**	**6**
NEGATIVE PRESSURE RANGE (psf)	0 – 50.0	0 – 60.0	0 – 130.0
AVERAGE CYCLE TIME (sec.)	3.0	3.2	1.0
NUMBER OF CYCLES	600	70	1

Test Specimen #1: Positive Cyclic Load per TAS 203

INDICATOR LOCATION	**MAXIMUM DEFLECTION (in.)**	**PERMANENT SET (in.)**
1	1.18	0.19
2	1.12	0.10
3	1.66	0.05
4	1.29	0.11
5	1.15	0.04
6	0.76	0.12

Test Specimen #1: Negative Cyclic Load per TAS 203

INDICATOR LOCATION	**MAXIMUM DEFLECTION (in.)**	**PERMANENT SET (in.)**
1	0.98	0.26
2	0.88	0.19
3	1.75	0.31
4	1.88	0.49
5	1.05	0.37
6	1.40	0.20

Note 4: *See Sketch #1 for indicator locations.*

intertek
Total Quality. Assured.

2658 Electronics Way
West Palm Beach, Florida 33407

Telephone: 561-881-0020
Facsimile: 717-764-4129
www.intertek.com/building

Test Specimen #2: Cyclic Test Spectrum and Average Cycle Time per TAS 203

DESIGN PRESSURE	**STAGE**		
+100.0 / -100.0 psf	**1**	**2**	**3**
POSITIVE PRESSURE RANGE (psf)	0 – 50.0	0 – 60.0	0 – 130.0
AVERAGE CYCLE TIME (sec.)	3.8	3.7	1.0
NUMBER OF CYCLES	600	70	1
	4	**5**	**6**
NEGATIVE PRESSURE RANGE (psf)	0 – 50.0	0 – 60.0	0 – 130.0
AVERAGE CYCLE TIME (sec.)	3.4	3.4	1.0
NUMBER OF CYCLES	600	70	1

Test Specimen #2: Positive Cyclic Load per TAS 203

INDICATOR LOCATION	**MAXIMUM DEFLECTION (in.)**	**PERMANENT SET (in.)**
1	0.66	0.14
2	1.51	0.18
3	0.92	0.26
4	1.47	0.19
5	2.13	0.20
6	1.56	0.20

Test Specimen #2: Negative Cyclic Load per TAS 203

INDICATOR LOCATION	**MAXIMUM DEFLECTION (in.)**	**PERMANENT SET (in.)**
1	0.59	0.07
2	1.39	0.18
3	0.77	0.10
4	0.83	0.07
5	1.61	0.30
6	0.73	0.18

Note 5: *See Sketch #1 for indicator locations.*

intertek
Total Quality. Assured.

2658 Electronics Way
West Palm Beach, Florida 33407

Telephone: 561-881-0020
Facsimile: 717-764-4129
www.intertek.com/building

Test Specimen #3: Cyclic Test Spectrum and Average Cycle Time per TAS 203

DESIGN PRESSURE	**STAGE**		
+100.0 / -100.0 psf	**1**	**2**	**3**
POSITIVE PRESSURE RANGE (psf)	0 – 60.0	0 – 72.0	0 – 156.0
AVERAGE CYCLE TIME (sec.)	3.1	2.6	1.0
NUMBER OF CYCLES	600	70	1
	4	**5**	**6**
NEGATIVE PRESSURE RANGE (psf)	0 – 60.0	0 – 72.0	0 – 156.0
AVERAGE CYCLE TIME (sec.)	2.9	2.7	1.0
NUMBER OF CYCLES	600	70	1

Test Specimen #3: Positive Cyclic Load per TAS 203

INDICATOR LOCATION	**MAXIMUM DEFLECTION (in.)**	**PERMANENT SET (in.)**
1	1.33	0.39
2	1.36	0.19
3	2.25	0.44
4	2.61	0.43
5	2.49	0.21
6	1.72	0.30

Test Specimen #3: Negative Cyclic Load per TAS 203

INDICATOR LOCATION	**MAXIMUM DEFLECTION (in.)**	**PERMANENT SET (in.)**
1	0.54	0.15
2	0.60	0.19
3	1.20	0.24
4	1.40	0.16
5	1.41	0.17
6	0.53	0.18

Note 6: *See Sketch #1 for indicator locations.*

2658 Electronics Way
West Palm Beach, Florida 33407

Telephone: 561-881-0020
Facsimile: 717-764-4129
www.intertek.com/building

SECTION 9
CONCLUSIONS

No signs of failure were observed in any area of the test specimen during the TAS 202 testing; as such, the test specimen satisfies the requirements of TAS 202. Upon completion of testing, specimens tested for TAS 202-94 met the requirements of Section 1620 of the Florida Building Code, Building.

No signs of failure were observed in any area of the test specimens during the cyclic load test; as such, the test specimens satisfy the cyclic load requirements of TAS 203. Upon completion of testing, specimens tested for TAS 203-94 met the requirements of Section 1625 of the Florida Building Code, Building.

This report is reissued in the name of Drexel Metals, Inc., through written authorization from Petersen Aluminum Corporation to whom the original report was rendered. The original Petersen Aluminum Corporation Report No is S6488.01-450-18 R0.

2658 Electronics Way
West Palm Beach, Florida 33407

Telephone: 561-881-0020
Facsimile: 717-764-4129
www.intertek.com/building

TEST REPORT FOR DREXEL METALS, INC.
Report No.: T2025.03-450-18 R1
Date: 01/27/26 Revised: 02/02/26

SECTION 10
SKETCH(ES)

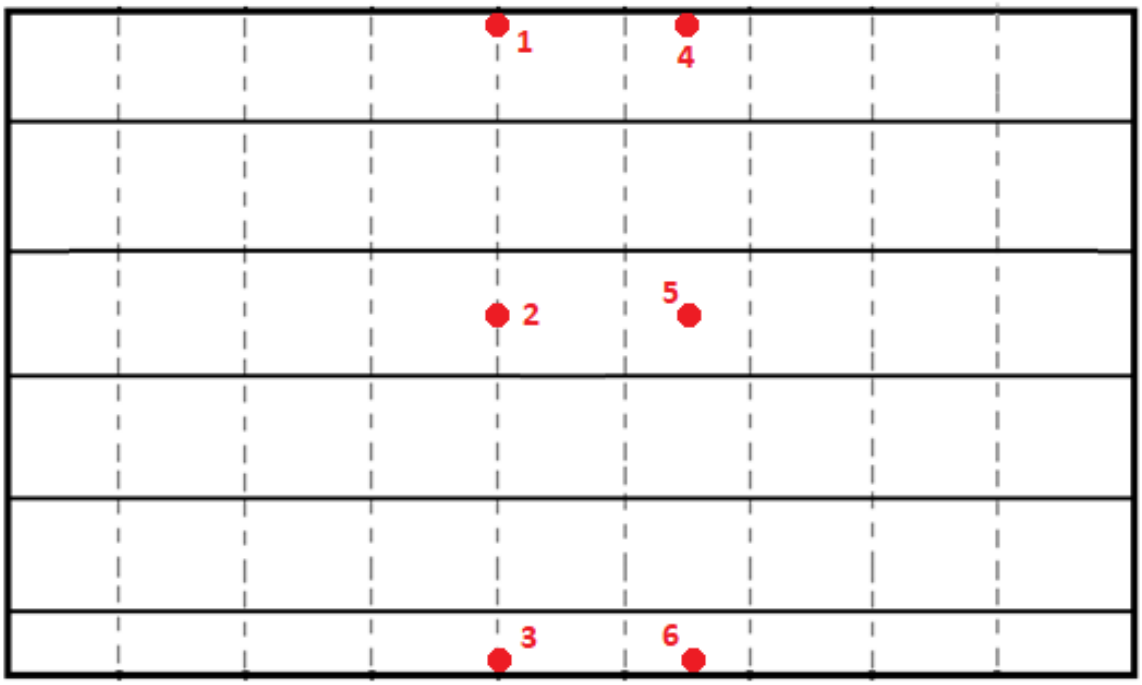

Sketch No. 1
TAS 202 Indicator Locations

2658 Electronics Way
West Palm Beach, Florida 33407

Telephone: 561-881-0020
Facsimile: 717-764-4129
www.intertek.com/building

SECTION 11
PHOTOGRAPHS

Photo No. 1
Front of Specimen After Testing

2658 Electronics Way
West Palm Beach, Florida 33407

Telephone: 561-881-0020
Facsimile: 717-764-4129
www.intertek.com/building

TEST REPORT FOR DREXEL METALS, INC.
Report No.: T2025.03-450-18 R1
Date: 01/27/26 Revised: 02/02/26

Photo No. 2
Back of Specimen After Testing

2658 Electronics Way
West Palm Beach, Florida 33407

Telephone: 561-881-0020
Facsimile: 717-764-4129
www.intertek.com/building

TEST REPORT FOR DREXEL METALS, INC.
Report No.: T2025.03-450-18 R1
Date: 01/27/26 Revised: 02/02/26

SECTION 12
DRAWINGS

The test specimen drawings have been reviewed by Intertek B&C and are representative of the test specimen(s) reported herein. Test specimen construction was verified by Intertek B&C per the drawings included in this report. Any deviations are documented herein or on the drawings.

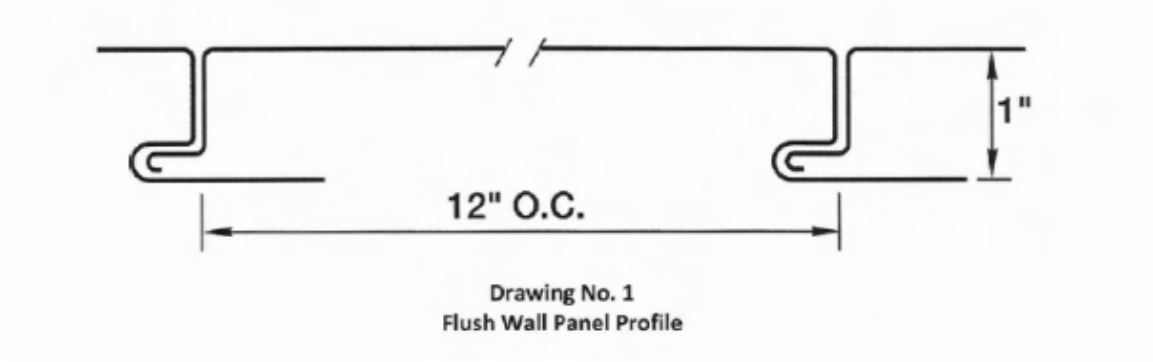

Drawing No. 1
Flush Wall Panel Profile

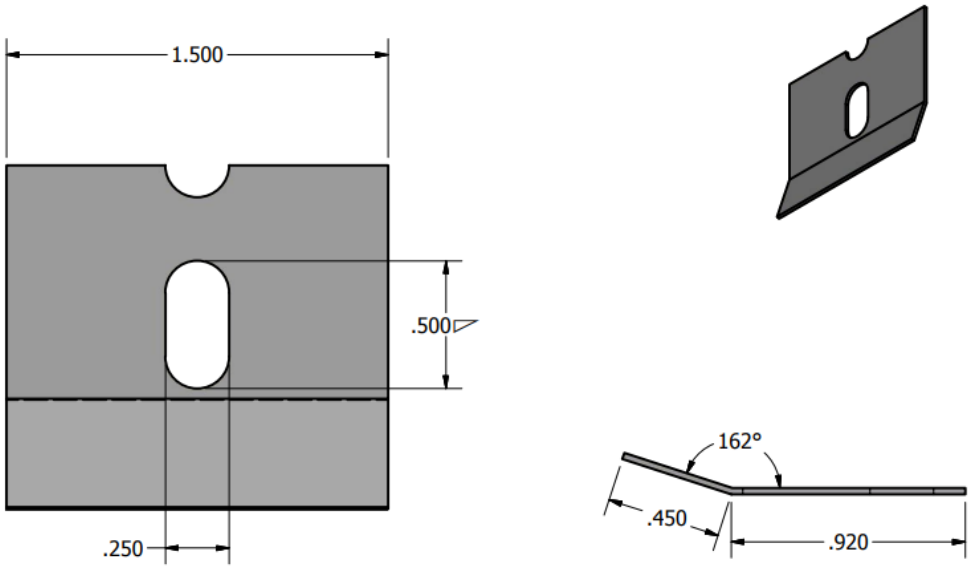

Drawing No. 2
Clip Dimensions

2658 Electronics Way
West Palm Beach, Florida 33407

Telephone: 561-881-0020
Facsimile: 717-764-4129
www.intertek.com/building

SECTION 13
REVISION LOG

REVISION #	DATE	PAGES	REVISION
0	01/27/2026	N/A	Original Report Issue – Reissued Report No. T2025.03-450-18 R0 in the name of Drexel Metals, Inc.
1	02/02/26	1,2, 4	Add Product description to Scope Paragraph. Correct product name adding FWQ100.