MODELS	1-3/8" THICK URETHANE		
CLOPAY/GALLERY	GD1SU, GR1SU	GD1LU, GR1LU	9132, HDPC13
HOLMES/ARTISTRY	AR1SU	AR1LU	7132
IDEAL/EXPRESSIONS	ED1SU	ED1LU	8135, MFC38U
	SHORT PANEL	LONG PANEL	FLUSH

REV	DATE	DESCRIPTION
00	05/23/12	INITIAL RELEASE
01	03/30/17	REVISED FOR 16'0" HIGH DOORS.
02	11/18/20	UPDATED TITLE BLOCK AND REMOVED WINDCODE CHART.

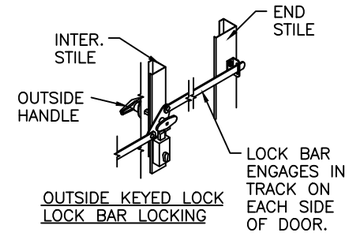

OUTSIDE KEYED LOCK
LOCK BAR LOCKING

OPTIONAL 1/8" ACRYLIC OR SSB GLASS LITES AVAILABLE. OPTIONAL ACRYLIC GLAZING IS PLASKOLITE OPTIX OR LUCITE CP APPROVED CC2 PLASTIC IN ACCORDANCE WITH IBC/FBC 2606 (SEE SECTION B–B)

SHORT WINDOW LITE SHOWN, LONG ALSO AVAIL (LONG WINDOW LITE FRAME NOT TO EXCEED 42" WIDE X 16' TALL)

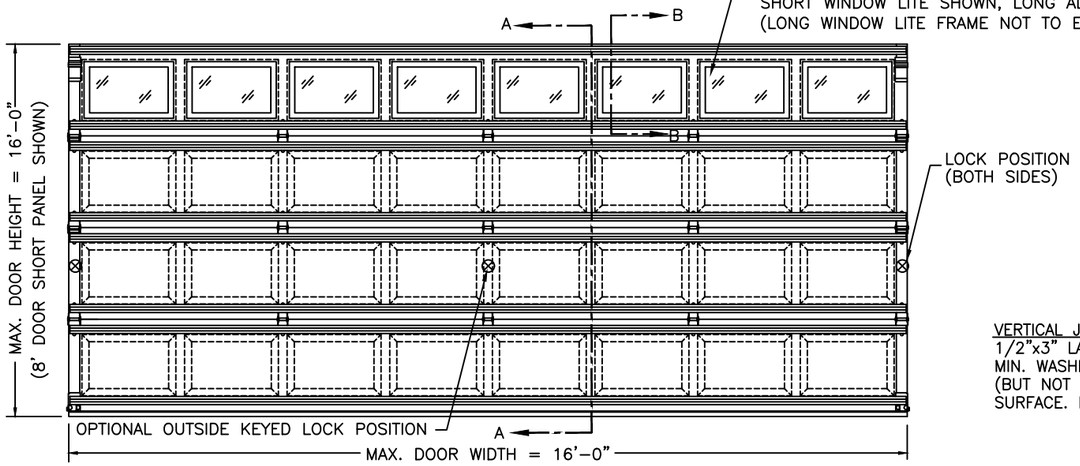

INSIDE ELEVATION

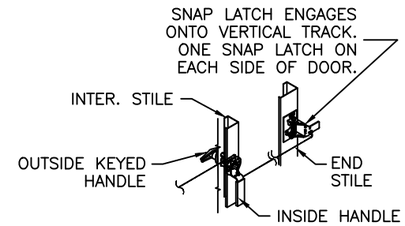

OUTSIDE KEYED LOCK
SNAP LATCH LOCK OPTION

VERTICAL JAMB ATTACHMENT (WOOD FRAME BUILDINGS):
1/2"x3" LAG SCREWS ON 22.5" CENTERS. 1" O.D. MIN. WASHER REQUIRED. LAG SCREWS MAY BE COUNTERSUNK (BUT NOT REQUIRED) TO PROVIDE A FLUSH MOUNTING SURFACE. HORIZONTAL JAMBS DO NOT TRANSFER LOAD.

SECTION A–A

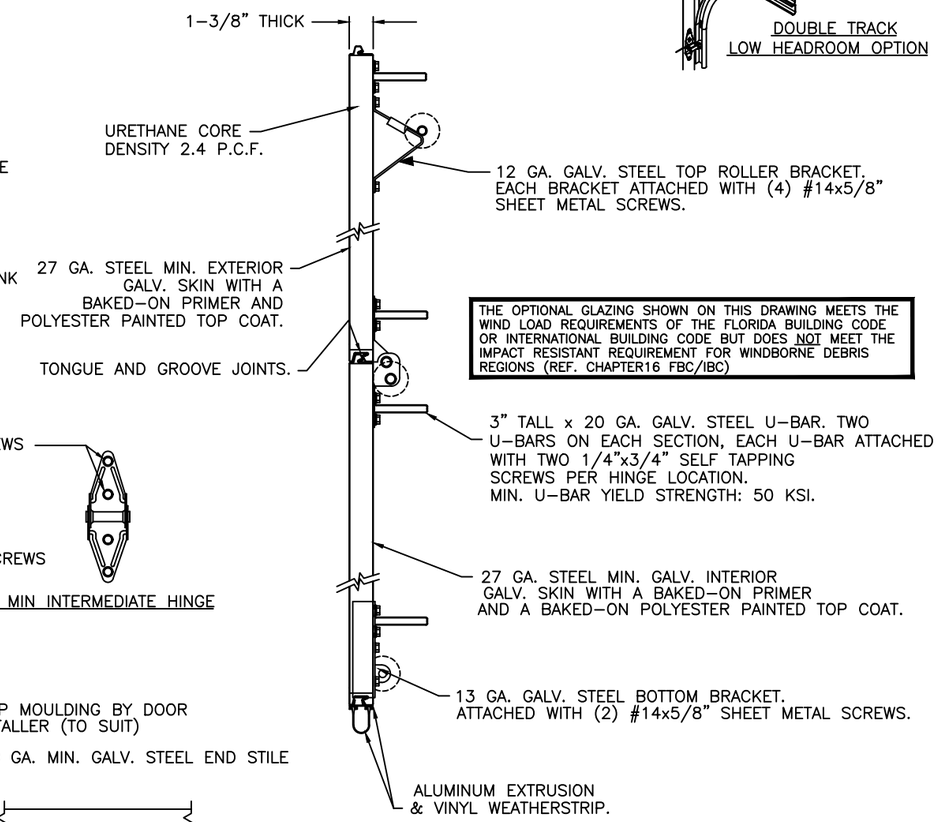

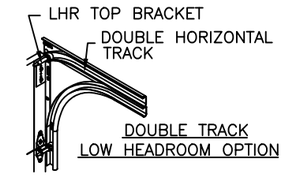

THE OPTIONAL GLAZING SHOWN ON THIS DRAWING MEETS THE WIND LOAD REQUIREMENTS OF THE FLORIDA BUILDING CODE OR INTERNATIONAL BUILDING CODE BUT DOES NOT MEET THE IMPACT RESISTANT REQUIREMENT FOR WINDBORNE DEBRIS REGIONS (REF. CHAPTER16 FBC/IBC)

VERTICAL JAMB ATTACHMENT (C–90 BLOCK OR 2,000 PSI MIN. CONCRETE COLUMN):
3/8"x4" SLEEVE ANCHORS ON 24" CENTERS (BOTH C–90 BLOCK OR 2,000 PSI MIN. CONCRETE) OR 1/4"x4" TAPCON SCREWS ON 21" CENTERS (2,000 PSI MIN. CONCRETE). WASHERS INCLUDED WITH SLEEVE ANCHORS, 1" O.D. MIN. WASHERS REQUIRED WITH TAPCONS. ANCHORS MAY BE COUNTERSUNK (BUT NOT REQUIRED) TO PROVIDE A FLUSH MOUNTING SURFACE. HORIZONTAL JAMBS DO NOT TRANSFER LOAD.

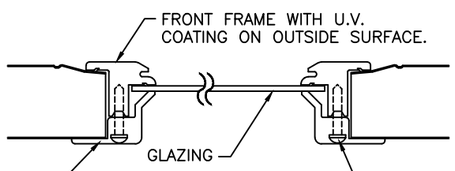

SECTION B–B
12 SCREW WINDOW LITE – SHORT
16 SCREW WINDOW LITE – LONG

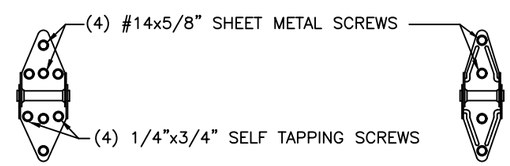

14 GA. END HINGE

18 GA. MIN INTERMEDIATE HINGE

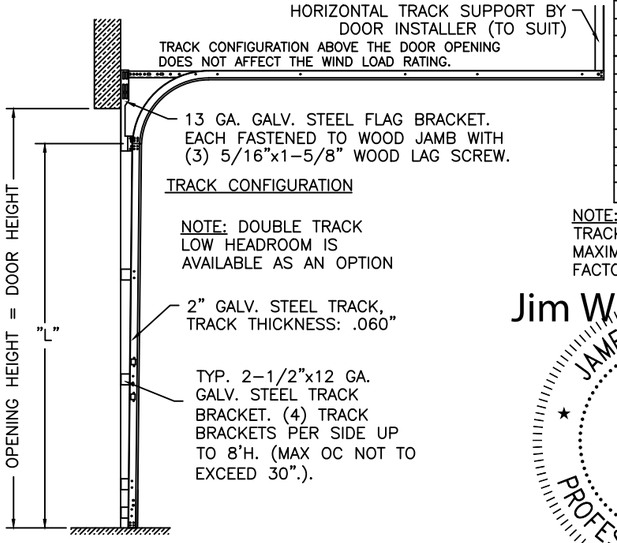

TRACK CONFIGURATION

NOTE: DOUBLE TRACK LOW HEADROOM IS AVAILABLE AS AN OPTION

DOOR HEIGHT	"L"	DOOR HEIGHT	"L"
6'–6"	70"	12'–6"	142"
7'–0"	76"	13'–0"	148"
7'–6"	82"	13'–6"	154"
8'–0"	88"	14'–0"	160"
8'–6"	94"	14'–6"	166"
9'–0"	100"	15'–0"	172"
9'–6"	106"	15'–6"	178"
10'–0"	112"	16'–0"	184"
10'–6"	118"		
11'–0"	124"		
11'–6"	130"		
12'–0"	136"		

NOTE: FOR DOORS OVER 12'–0" HIGH, TRACK CONFIGURATION SHALL NOT EXCEED MAXIMUM SPACING PROVIDED. CONSULT FACTORY FOR MORE DETAIL IF RQD.

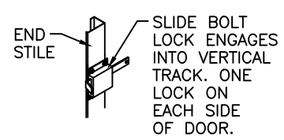

INSIDE SLIDE BOLT
LOCK OPTION

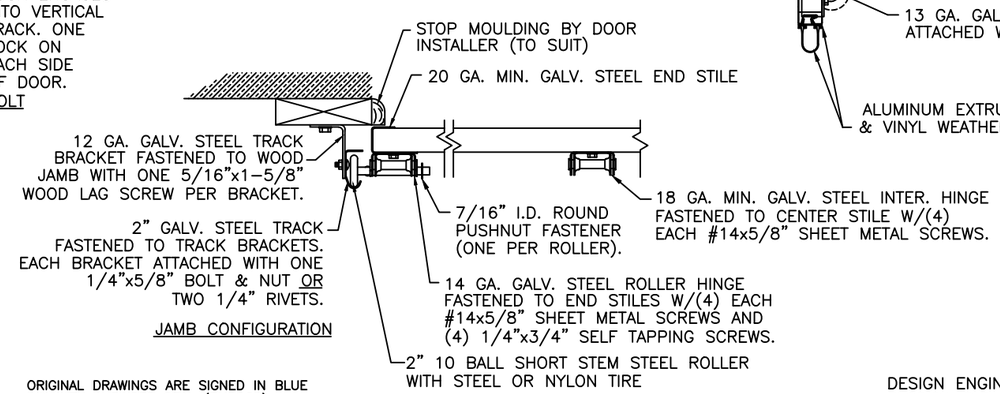

JAMB CONFIGURATION

NOTE: THE DESIGN OF THE SUPPORTING STRUCTURAL ELEMENTS SHALL BE THE RESPONSIBILITY OF THE PROFESSIONAL OF RECORD FOR THE BUILDING OR STRUCTURE AND IN ACCORDANCE WITH CURRENT BUILDING CODES FOR THE LOADS LISTED ON THIS DRAWING.

DESIGN LOADS: +20.0 PSF & –21.0 PSF
TEST LOADS: +30.0 PSF & –31.0 PSF

DESIGN ENGINEER: JAMES D. WHEELER, P.E.
FLORIDA P.E. #91932

Jim Wheeler
Digitally signed by Jim Wheeler
Date: 2026.08.19 15:06:37 -04'00'

JAMES D. WHEELER
LICENSE
No. 91932
STATE OF
FLORIDA
PROFESSIONAL ENGINEER

ORIGINAL DRAWINGS ARE SIGNED IN BLUE INK WITH A RAISED SEAL (EMBOSS)

Clopay CORPORATION

CLOPAY CORPORATION
8585 DUKE BLVD.
MASON, OH 45040
(513) 770–4800

Clopay Corporation All Rights Reserved.

MANUFACTURING PRODUCT CODE: DSIU–1A471	WINDLOAD RATING: W3	MAX. DOOR SIZE: 16'W x 16'H	
DATE: 05/23/12	DESCRIPTION: GALLERY 1–3/8" PUR DC +20/–21 PSF		
DRAWN BY: NAS	B	DRAWING NUMBER: 104425	VER: IBC
CHECKED BY:			

FLORIDA PRODUCT APPROVAL 47958.10