GENERAC POWER SYSTEMS

L2A GENRATOR ENCLOSURES

LARGE AND SMALL MISSILE IMPACT RATED (MISSILE LEVEL E)

VALID FOR USE INSIDE AND OUTSIDE THE HVHZ

THIS IS A NON-SITE-SPECIFIC STRUCTURAL PERFORMANCE EVALUATION. A DESIGN PROFESSIONAL SHALL BE RESPONSIBLE FOR CERTIFYING THE APPLICATION OF THIS INFORMATION TO ANY SITE-SPECIFIC LOCATION.

ENGINEER SIGNATURE & SEAL NOTICE:

*PRINTED COPIES OF THIS DOCUMENT ARE NOT CONSIDERED SIGNED & SEALED. SIGNATURE MUST BE VERIFIED ON ANY ELECTRONIC COPIES.
***FOR FLORIDA STATEWIDE PRODUCT APPROVALS (FSAs) REGISTERED & APPROVED WITH THE STATE OF FLORIDA:**
ORIGINAL, SEALED COPIES OF APPROVED FLORIDA PRODUCT APPROVALS ARE NOT REQUIRED FOR PERMIT.
SEE **ECALC.IO/SEAL** TO LEARN MORE.

RICHARD NEET, P.E.
PE# 86488 CA# 9885

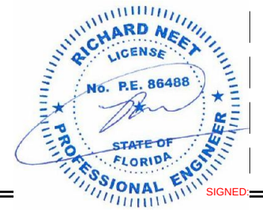

SIGNED:

JULY 3, 2025

FL

APPROVED ENCLOSURE MODELS

Model Name	A-GRP	B-GRP	C-GRP	D-GRP	E-GRP	F-GRP	H-GRP	A-GRP*	B-GRP*	D-GRP*
Length (in)	94.84	111.81	144.53	143.03	154.45	180.63	207.40	94.84	111.73	136.65
Width (in)	37.99	40.47	40.47	50.39	53.98	57.48	70.87	37.99	40.47	50.39
Height without base (in)	55.75	60.67	80.87	83.78	83.78	97.76	104.33	51.30	61.38	72.09
Weight Range incl. internals (lbs)	2070-2873	2379-3710	3863-4092	3545-4788	5033-6206	7099-8512	8982-12868	2070-2145	2436-2751	3545-4123

**Alternate Air Intake Design*

NOTES:
1. THE ENCLOSURE MODELS DETAILED HEREIN (A-GROUP AND H-GROUP) ARE AS TESTED.
2. ON ACTUAL UNITS, THE COMPONENTS AND FEATURES MAY VARY SO LONG AS THE MAXIMUM UNIT DIMENSIONS ARE NOT EXCEEDED.
3. B-GROUP THROUGH F-GROUP ENCLOSURES ARE QUALIFIED VIA RATIONAL ANALYSIS BASED ON THE WORST CASE UNITS TESTED AND ARE SIMILAR IN CONSTRUCTION.

DESIGN NOTES:

SITE-SPECIFIC PRESSURE REQUIREMENTS AS DETERMINED IN ACCORDANCE WITH ASCE 7-22 AND CHAPTER 16 OF THE FLORIDA BUILDING CODE SHALL BE LESS THAN OR EQUAL TO THE ALLOWABLE (ASD) DESIGN PRESSURE CAPACITY VALUES LISTED HEREIN FOR ANY ASSEMBLY AS SHOWN. DESIGN PRESSURE REQUIREMENTS SHALL BE DETERMINED BY A REGISTERED DESIGN PROFESSIONAL ON A JOB-SPECIFIC BASIS IN ACCORDANCE WITH THE GOVERNING CODE.

ALLOWABLE DESIGN PRESSURES		
COMPONENT	POSITIVE	NEGATIVE
WALL	65 PSF	65 PSF
ROOF	65 PSF	65 PSF

GENERAL NOTES:

1. THIS SYSTEM HAS BEEN DESIGNED AND SHALL BE FABRICATED IN ACCORDANCE WITH THE REQUIREMENTS OF THE FLORIDA BUILDING CODE EIGHTH EDITION (2023). THIS SYSTEM MAY BE USED WITHIN AND OUTSIDE THE HIGH VELOCITY HURRICANE ZONE.
2. THIS SYSTEM HAS BEEN TESTED PER TAS 201, 202 & 203 PER TEST REPORT#S5025.01-301-18-R0 BY INTERTEK.THIS PRODUCT APPROVAL IS INTENDED TO CERTIFY THE STRUCTURAL CAPACITY AND LARGE MISSILE IMPACT RESISTANCE OF THE EXTERIOR CABINETRY ONLY. INTERIOR MECHANISMS AND ELECTRICAL COMPONENTS ARE NOT INCLUDED IN THIS CERTIFICATION. THIS SYSTEM HAS NOT BEEN TESTED FOR WATER INFILTRATION WHICH IS NOT INCLUDED IN THIS CERTIFICATION.
3. ALL DIMENSIONS AND WEIGHTS OF THE MECHANICAL UNITS SHALL CONFORM TO LIMITATIONS STATED HEREIN. UNIT CONSTRUCTION DETAILS HEREIN ARE PER TESTED UNITS (35kW & 750kW); OTHER UNITS SPECIFIED HEREIN SHALL BE OF SIMILAR CONSTRUCTION. ALL MECHANICAL SPECIFICATIONS (CLEAR SPACE, TONNAGE, ETC.) SHALL BE AS PER MANUFACTURER RECOMMENDATIONS AND ARE THE EXPRESS RESPONSIBILITY OF THE CONTRACTOR. THIS PRODUCT APPROVAL DOES NOT INCLUDE INTERNALLY MOUNTED COMPONENTS OR ANY ELECTRICAL DEVICES OR CIRCUITRY.
4. ALL FASTENERS/BOLTS SHALL BE MINIMUM 1/4" GRADE 5, M6 GRADE 8.8 OR 316 STAINLESS STEEL OR EQUIVALENT U.N.O. PROVIDE (3) PITCHES MINIMUM PAST THE THREAD PLANE FOR SHEET METAL SCREWS U.N.O. ALL FASTENERS SHALL HAVE APPROPRIATE CORROSION PROTECTION TO PREVENT ELECTROLYSIS U.N.O. ALL FASTENER CONNECTIONS TO STEEL SHALL PROVIDE 2xDIAMETER EDGE DISTANCE AND 2xDIAMETER SPACING U.N.O.
5. ANY ALUMINUM COMPONENTS (IF APPLICABLE) SHALL BE 5052-H32 ALUMINUM ONLY U.N.O.
6. STEEL COMPONENTS SHALL BE 20GA MINIMUM THICKNESS WITH MINIMUM Fy = 33KSI, U.N.O.
7. CONNECTIONS TO THE SUPPORTING FRAME OR HOST STRUCTURE (BY OTHERS) SHALL BE PER THE DETAILS HEREIN. PERFORMANCE OF HOST FRAME/STRUCTURE TO SUPPORT THE UNIT ASSEMBLY SHALL BE PER SEPARATE CERTIFICATION.
8. THE CONTRACTOR IS RESPONSIBLE TO INSULATE ALL MEMBERS FROM DISSIMILAR MATERIALS TO PREVENT ELECTROLYSIS.
9. ELECTRICAL GROUND, WHEN REQUIRED, TO BE DESIGNED & INSTALLED BY OTHERS.
10. THE ADEQUACY OF ANY EXISTING STRUCTURE TO WITHSTAND SUPERIMPOSED LOADS SHALL BE VERIFIED BY THE ONSITE DESIGN PROFESSIONAL AND IS NOT INCLUDED IN THIS CERTIFICATION.EXCEPT AS EXPRESSLY PROVIDED HEREIN, NO ADDITIONAL CERTIFICATIONS OR AFFIRMATIONS ARE INTENDED.
11. THE SYSTEM DETAILED HEREIN IS GENERIC AND DOES NOT PROVIDE INFORMATION FOR A SPECIFIC SITE. FOR SITE CONDITIONS DIFFERENT FROM THE CONDITIONS DETAILED HEREIN, A LICENSED ENGINEER OR REGISTERED ARCHITECT SHALL PREPARE SITE SPECIFIC DOCUMENTS FOR USE IN CONJUNCTION WITH THIS DOCUMENT.
12. WATER-TIGHTNESS OF EXISTING HOST SUBSTRATE SHALL BE THE FULL RESPONSIBILITY OF THE INSTALLING CONTRACTOR. CONTRACTOR SHALL ENSURE THAT ANY REMOVED OR ALTERED WATERPROOFING MEMBRANE IS RESTORED AFTER FABRICATION AND INSTALLATION OF STRUCTURE PROPOSED HEREIN. THIS ENGINEER SHALL NOT BE RESPONSIBLE FOR ANY WATERPROOFING OR LEAKAGE ISSUES WHICH MAY OCCUR AS WATER-TIGHTNESS SHALL BE THE FULL RESPONSIBILITY OF THE INSTALLING CONTRACTOR.

SHEET INDEX

SHEET NO.	DESCRIPTION
1	COVER/GEN NOTES
2-3	A-GROUP UNIT LAYOUT
4	A-GROUP UNIT TIEDOWN
5-8	A-GROUP UNIT COMPONENTS
9-10	H-GROUP UNIT LAYOUT
11	H-GROUP UNIT TIEDOWN
12-16	H-GROUP UNIT COMPONENTS

NOTE REGARDING USE OF THIS DOCUMENT & USE OUTSIDE FLORIDA:

THIS IS A NON-SITE-SPECIFIC STRUCTURAL PERFORMANCE EVALUATION. THIS PRODUCT EVALUATION IS VALID FOR USE IN **FLORIDA ONLY**. USE OF THIS EVALUATION REQUIRES A REVIEW & CERTIFICATION BY A LOCAL DESIGN PROFESSIONAL WHO SHALL BE RESPONSIBLE FOR THE PROPER ADAPTATION OF THIS GENERAL PERFORMANCE EVALUATION TO ANY SITE-SPECIFIC PROJECT. CONTACT THIS OFFICE AT **ENGINEERINGEXPRESS.COM/QUOTE** FOR ASSISTANCE WITH YOUR PROJECT-SPECIFIC NEEDS & FOR ADAPTATION & CERTIFICATION OF THIS DOCUMENT OUTSIDE OF FLORIDA.

VISIT ECALC.IO/63327

FOR SITE-SPECIFIC DEVIATIONS & MORE INFORMATION ABOUT THIS DOCUMENT OR SCAN THIS QR CODE

VISIT ENGINEERINGEXPRESS.COM/STORE FOR ADDITIONAL PLANS, REPORTS & RESOURCES

ENGINEERING EXPRESS®
POSTAL ADDRESS:
2234 NORTH FEDERAL HWY #7664
BOCA RATON, FL 33431
ENGINEERINGEXPRESS.COM

GENERAC POWER SYSTEMS
S45W29290 Highway 59
Waukesha, WI 53189
PHONE: (262) 544-4811

GENERAC L2A ENCLOSURE MODELS
A-GROUP THRU H-GROUP ENCLOSURES
FLORIDA STATEWIDE APPROVAL (FSA)

REMARKS	DRWN	CHKD	DATE
INIT ISSUE	EPR	RWN	08/08/23
REV/ PER MD COMMENTS	EPR	RWN	05/08/24
REV. PER MD COMMENTS	EPR	RWN	09/19/24
-	-	-	-
-	-	-	-

THIS DOCUMENT IS THE PROPERTY OF ENGINEERING EXPRESS, AND SHALL NOT BE REPRODUCED IN WHOLE OR PART WITHOUT WRITTEN CONSENT OF ENGINEERING EXPRESS. ALTERATIONS, ADDITIONS, OR OTHER MARKINGS TO THIS DOCUMENT ARE NOT PERMITTED AND INVALIDATE OUR CERTIFICATION.

COPYRIGHT ENGINEERING EXPRESS®

23-63327

SCALE: NTS UNLESS NOTED

1 OF 16

7/3/2025 12:27 PM RICHARDNEET(EPR) C:\Users\richardneetpe\engineering express\production - documents\projects\23-63327 generac l2a a-group thru h-group enclosures\work\2023 fbc\drawings & cad\23-63327b generac perf eval.dwg

C:\Users\richardneetpe\engineering express\production - documents\projects\23-63327 generac l2a a-group thru h-group enclosures\work\2023 fbc\drawings & cad\23-63327c generac perf eval.dwg
7/3/2025 12:29 PM RICHARDNEETPE

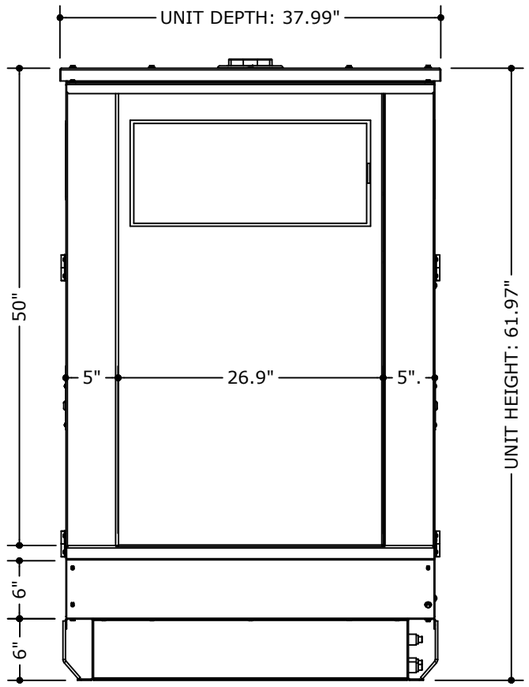

1/2 ENCLOSURE SIZE (A-GROUP)
NOT TO SCALE LEFT ELEV VIEW

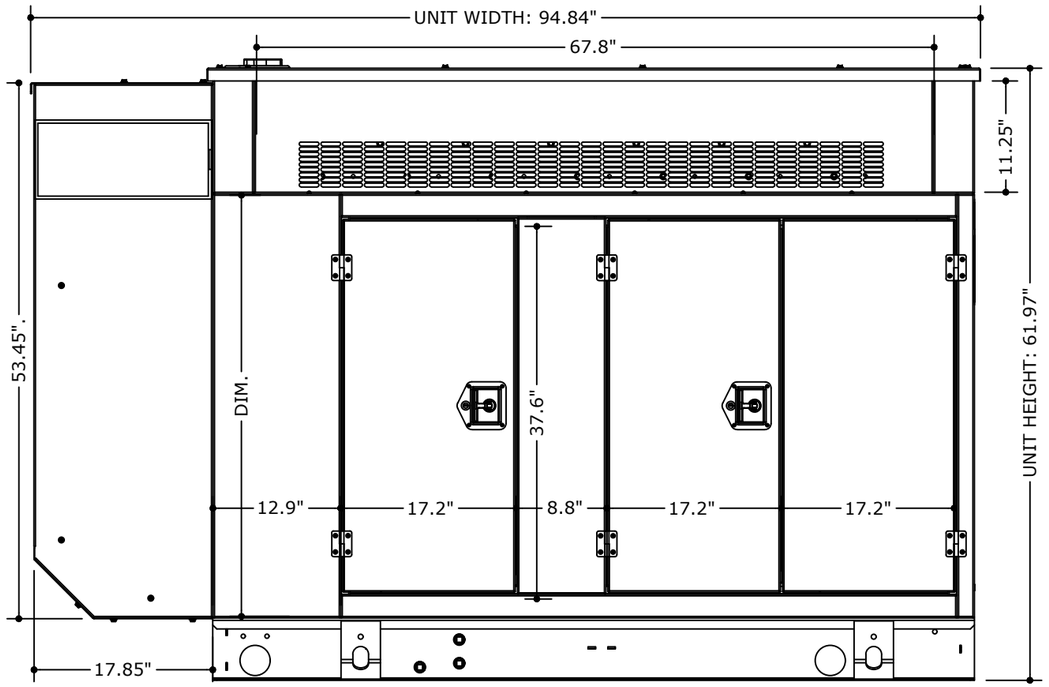

2/2 ENCLOSURE SIZE (A-GROUP)
NOT TO SCALE FRONT ELEV VIEW

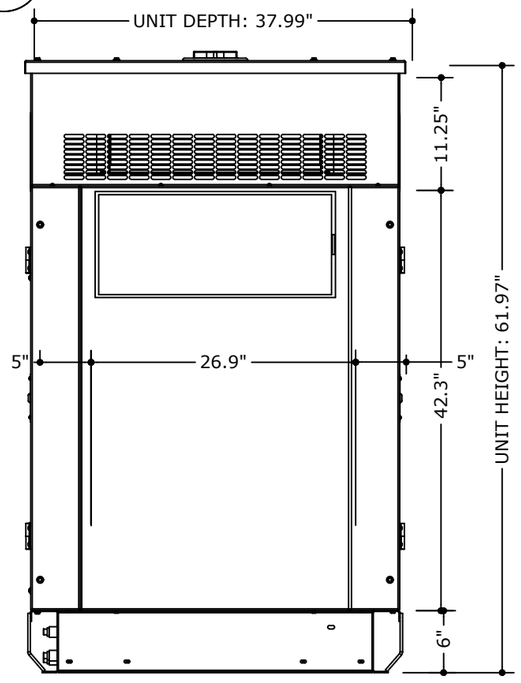

3/2 ENCLOSURE SIZE (A-GROUP)
NOT TO SCALE RIGHT ELEV VIEW

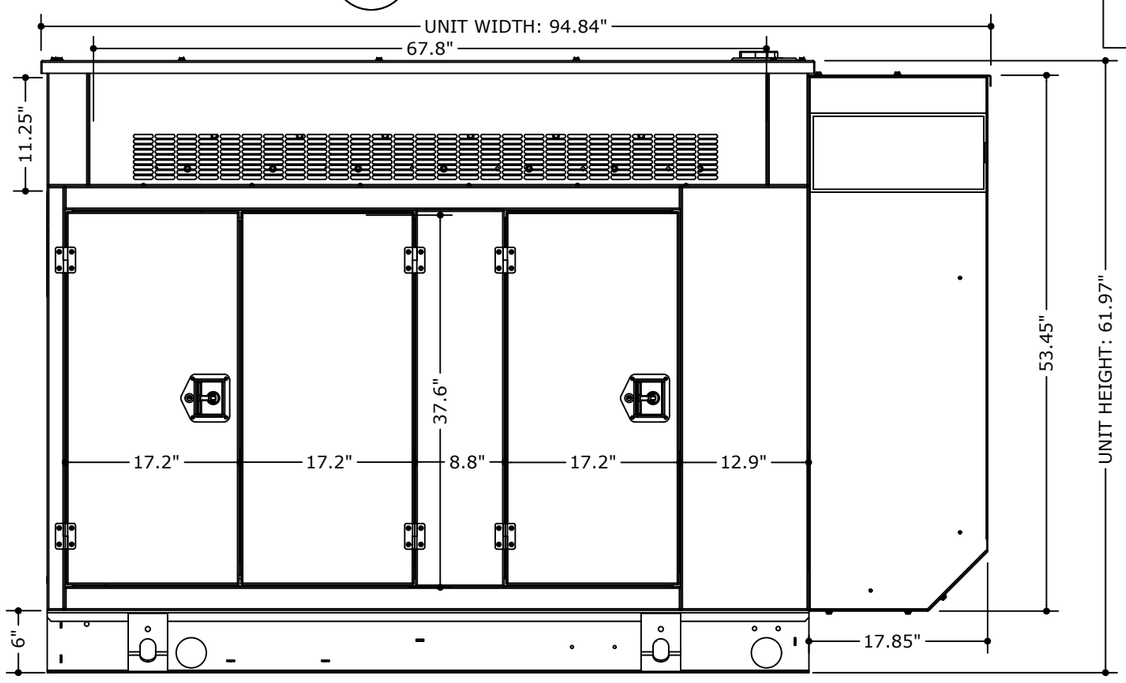

4/2 ENCLOSURE SIZE (A-GROUP)
NOT TO SCALE BACK ELEV VIEW

(A-GROUP) ENCLOSURE SIZE

RICHARD NEET, P.E.
PE# 86488 CA# 9885

RICHARD NEET LICENSE No. P.E. 86488 STATE OF FLORIDA PROFESSIONAL ENGINEER
SIGNED:

JULY 3, 2025

FL

ENGINEERING EXPRESS®
POSTAL ADDRESS:
2234 NORTH FEDERAL HWY #7664
BOCA RATON, FL 33431
ENGINEERINGEXPRESS.COM

GENERAC POWER SYSTEMS
S45W29290 Highway 59
Waukesha, WI 53189
PHONE: (262) 544-4811

GENERAC L2A ENCLOSURE MODELS
A-GROUP THRU H-GROUP ENCLOSURES
FLORIDA STATEWIDE APPROVAL (FSA)

REMARKS	DRWN	CHKD	DATE
INIT ISSUE	EPR	RWN	08/08/23
REV/ PER MD COMMENTS	EPR	RWN	05/08/24
REV. PER MD COMMENTS	EPR	RWN	09/19/24
-	-	-	-
-	-	-	-

THIS DOCUMENT IS THE PROPERTY OF ENGINEERING EXPRESS, AND SHALL NOT BE REPRODUCED IN WHOLE OR PART WITHOUT WRITTEN CONSENT OF ENGINEERING EXPRESS. ALTERATIONS, ADDITIONS, OR OTHER MARKINGS TO THIS DOCUMENT ARE NOT PERMITTED AND INVALIDATE OUR CERTIFICATION.

COPYRIGHT ENGINEERING EXPRESS®

23-63327

SCALE: NTS UNLESS NOTED

2 OF 10

(A-GROUP) ENCLOSURE SIZE

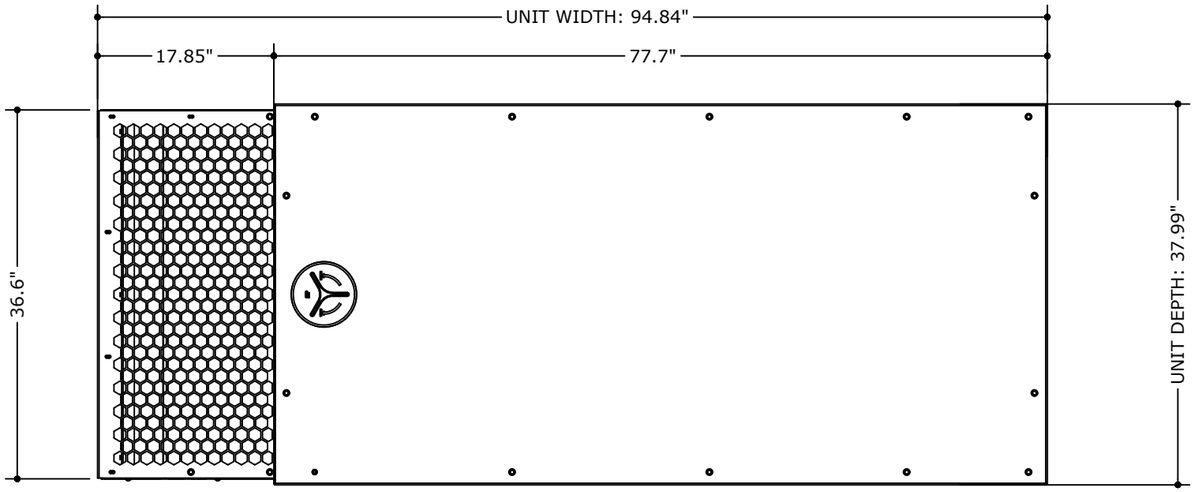

1/3 ENCLOSURE SIZE (A-GROUP)
NOT TO SCALE — PLAN VIEW

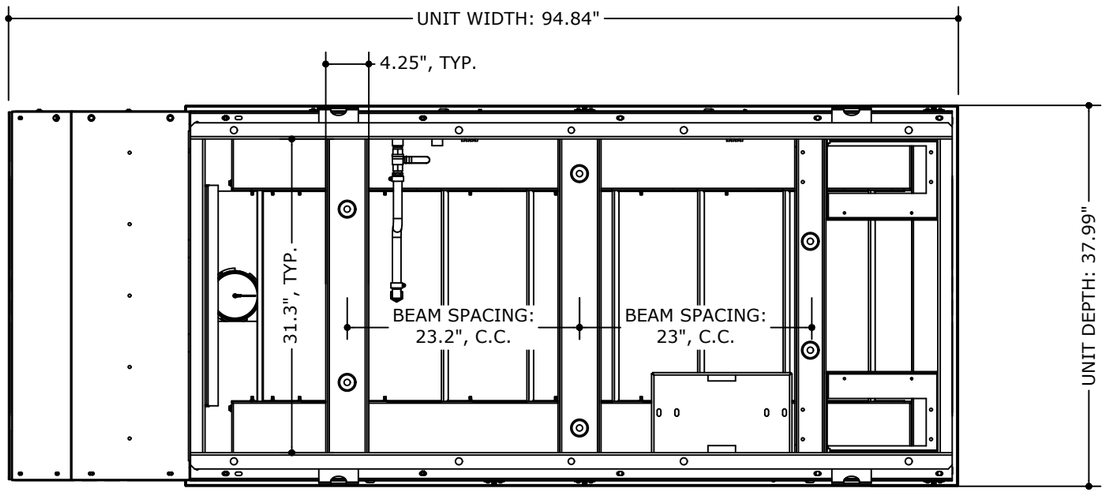

2/3 ENCLOSURE SIZE (A-GROUP)
NOT TO SCALE — BOTTOM VIEW

RICHARD NEET, P.E.
PE# 86488 CA# 9885

RICHARD NEET LICENSE No. P.E. 86488 STATE OF FLORIDA PROFESSIONAL ENGINEER

SIGNED:

JULY 3, 2025

FL

ENGINEERING EXPRESS
POSTAL ADDRESS:
2234 NORTH FEDERAL HWY #7664
BOCA RATON, FL 33431
ENGINEERINGEXPRESS.COM

GENERAC POWER SYSTEMS
S45W29290 Highway 59
Waukesha, WI 53189
PHONE: (262) 544-4811

GENERAC L2A ENCLOSURE MODELS
A-GROUP THRU H-GROUP ENCLOSURES
FLORIDA STATEWIDE APPROVAL (FSA)

REMARKS	DRWN	CHKD	DATE
INIT ISSUE	EPR	RWN	08/08/23
REV/ PER MD COMMENTS	EPR	RWN	05/08/24
REV. PER MD COMMENTS	EPR	RWN	09/19/24
-	-	-	-
-	-	-	-

THIS DOCUMENT IS THE PROPERTY OF ENGINEERING EXPRESS, AND SHALL NOT BE REPRODUCED IN WHOLE OR PART WITHOUT WRITTEN CONSENT OF ENGINEERING EXPRESS. ALTERATIONS, ADDITIONS, OR OTHER MARKINGS TO THIS DOCUMENT ARE NOT PERMITTED AND INVALIDATE OUR CERTIFICATION.

COPYRIGHT ENGINEERING EXPRESS®

23-63327

SCALE: NTS UNLESS NOTED

3 OF 16

7/3/2025 12:29 PM RICHARDNEET C:\Users\richardneetpe\engineering express\production - documents\projects\23-\23-63327 generac perf eval.dwg
27 generac l2a a-group thru h-group enclosures\work\2023 fbc\drawings & cad\23-63327c generac perf eval.dwg

RICHARD NEET, P.E.
PE# 86488 CA# 9885

JULY 3, 2025

RICHARD NEET LICENSE No. P.E. 86488 STATE OF FLORIDA PROFESSIONAL ENGINEER

SIGNED:

FL

ENCLOSURE TIE-DOWN:

(A-GROUP ENCLOSURE SIZE)

TIE-DOWN DIRECTIVE:

OPTION 1: ENCLOSURE TO CONCRETE:
ATTACH THE UNIT BASE (SKID) TO THE 3000 PSI MIN. REGULAR-WEIGHT CONCRETE HOST STRUCTURE BY OTHERS WITH 5/8" Ø HILTI KWIK BOLT 3 CS ANCHORS (OR EQUIVALENT) WITH 4" EMBEDMENT, 8-1/2" MIN. EDGE DISTANCE TO ANY EDGE OF THE CONCRETE, (1) ANCHOR PER MOUNTING HOLE AS SHOWN BELOW (4 PER SIDE, 8 TOTAL). HOST CONCRETE THICKNESS SHALL BE 1.5X THE ANCHOR EMBEDMENT (6" MIN.).

OPTION 2: ENCLOSURE TO TANK & TANK TO CONCRETE
ATTACH THE UNIT BASE (SKID) TO THE STEEL TANK WITH 5/8" Ø BOLTS W/ STD. NUTS/WASHERS, (1) ANCHOR PER MOUNTING HOLE AS SHOWN BELOW (4 PER SIDE, 8 TOTAL). ATTACH TANK TO THE 3000 PSI MIN. REGULAR-WEIGHT CONCRETE HOST STRUCTURE BY OTHERS WITH HILTI KWIK BOLT 3 CS ANCHORS (OR EQUIVALENT) WITH 4" EMBEDMENT, 8-1/2" MIN. EDGE DISTANCE TO ANY EDGE OF THE CONCRETE, (4) ANCHORS PER LONG SIDE AND (2) PER SHORT SIDE (12 TOTAL). HOST CONCRETE THICKNESS SHALL BE 1.5X THE ANCHOR EMBEDMENT (6" MIN.).

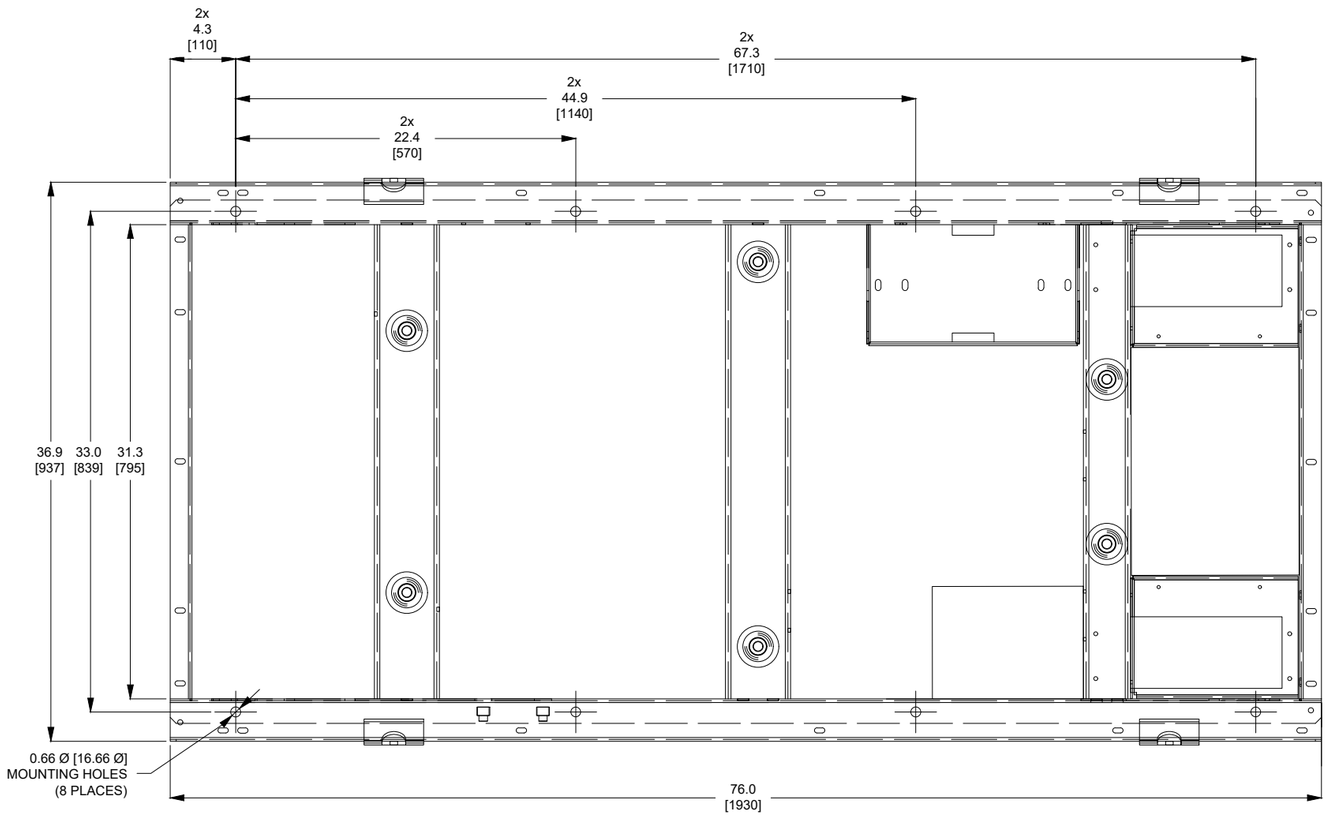

1/4 ENCLOSURE SIZE (A-GROUP) UNIT BASE MOUNTING HOLES
NOT TO SCALE BOTTOM VIEW

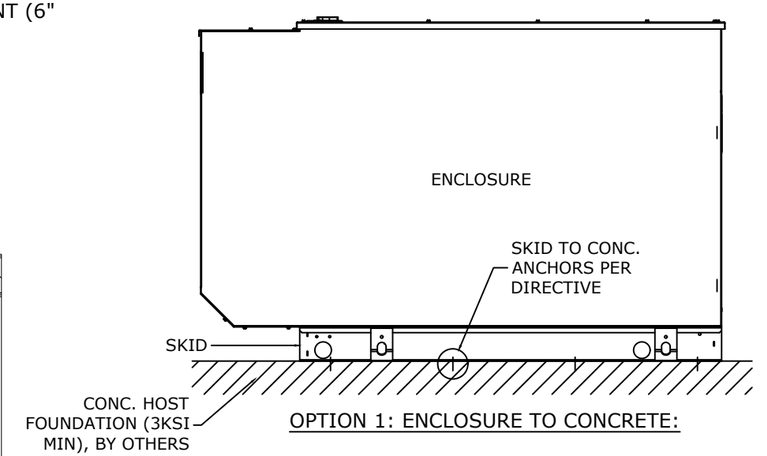

OPTION 1: ENCLOSURE TO CONCRETE:

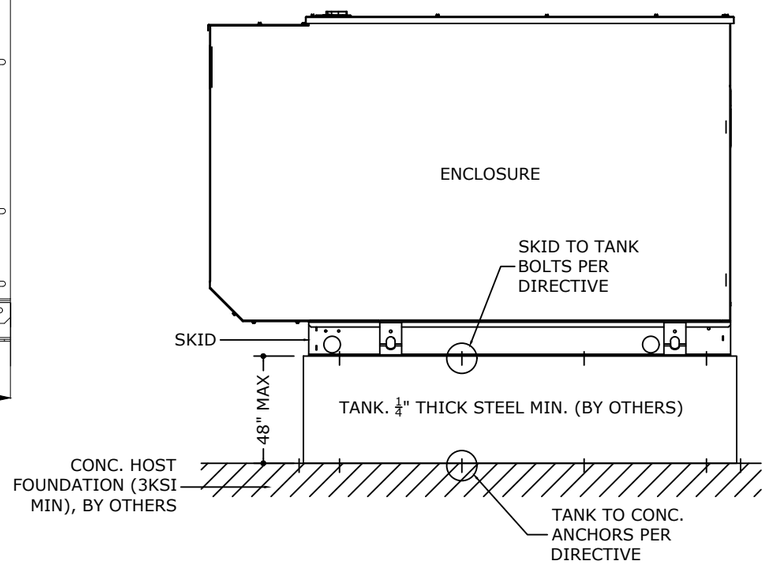

OPTION 2: ENCLOSURE TO TANK & TANK TO CONCRETE

ENGINEERING EXPRESS®
POSTAL ADDRESS:
2234 NORTH FEDERAL HWY #7664
BOCA RATON, FL 33431
ENGINEERINGEXPRESS.COM

GENERAC POWER SYSTEMS
S45W29290 Highway 59
Waukesha, WI 53189
PHONE: (262) 544-4811

GENERAC L2A ENCLOSURE MODELS
A-GROUP THRU H-GROUP ENCLOSURES
FLORIDA STATEWIDE APPROVAL (FSA)

REMARKS	DRWN	CHKD	DATE
INIT ISSUE	EPR	RWN	08/08/23
REV/ PER MD COMMENTS	EPR	RWN	05/08/24
REV. PER MD COMMENTS	EPR	RWN	09/19/24
-	-	-	-
-	-	-	-

THIS DOCUMENT IS THE PROPERTY OF ENGINEERING EXPRESS, AND SHALL NOT BE REPRODUCED IN WHOLE OR PART WITHOUT WRITTEN CONSENT OF ENGINEERING EXPRESS. ALTERATIONS, ADDITIONS, OR OTHER MARKINGS TO THIS DOCUMENT ARE NOT PERMITTED AND INVALIDATE OUR CERTIFICATION.

COPYRIGHT ENGINEERING EXPRESS®

23-63327

SCALE: NTS UNLESS NOTED

7/3/2025 12:29 PM RICHARDNEETPE Users\richardneetpe\engineering express\production - documents\projects\23-\23-63327 generac l2a a-group thru h-group enclosures\work\2023 fbc\drawings & cad\23-63327c generac perf eval.dwg

J:\projects\23-\23-63327 generac l2a a-group thru h-group enclosures\work\2023 fbc\drawings & cad\23-63327c generac perf eval.dwg
7/3/2025 12:29 PM RICHARDNEET C:\Users\richardneetpe\engineering express\production - documents\projects\23-

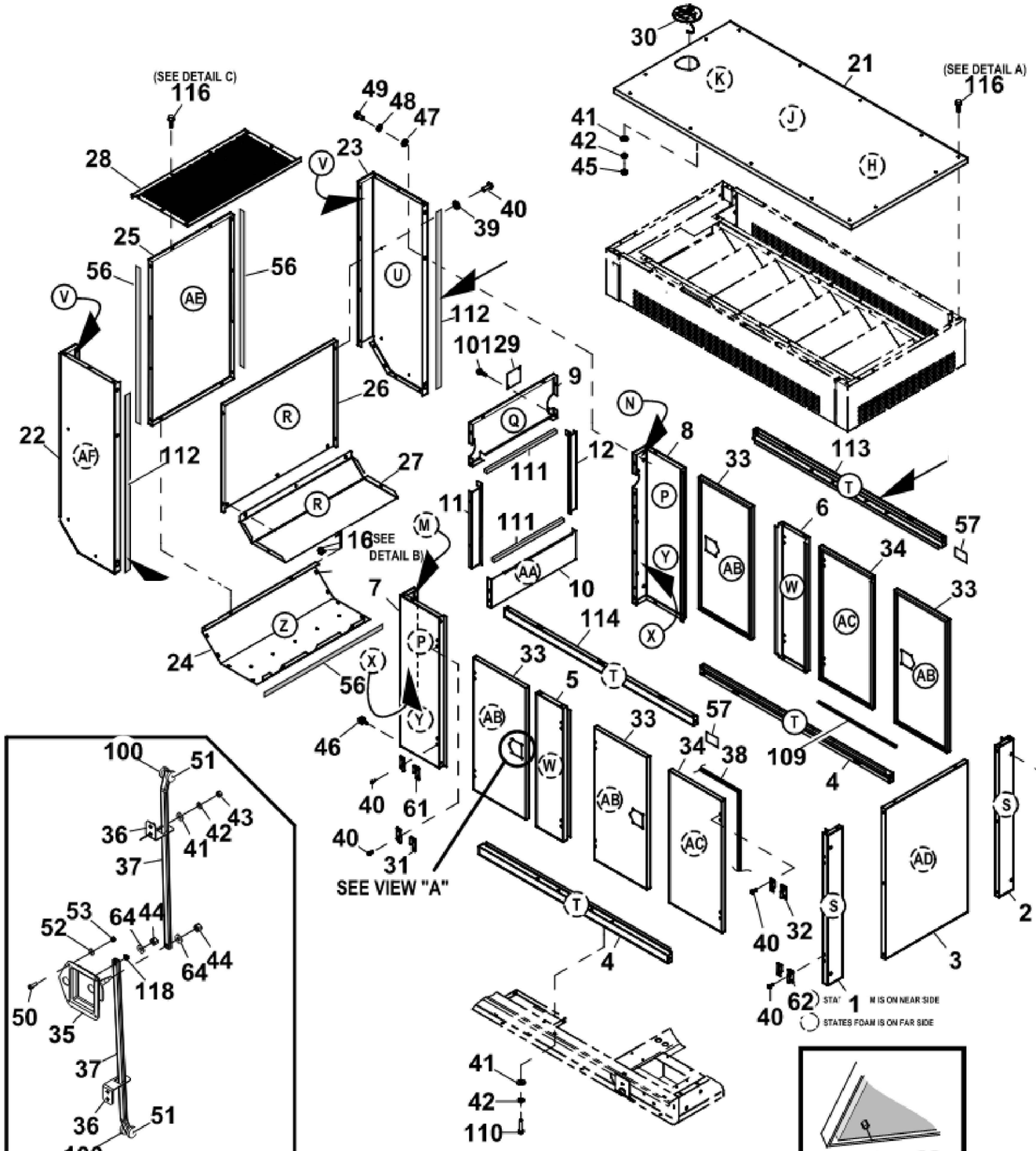

1 / 5 A-GROUP COMPONENTS
NOT TO SCALE EXPLODED VIEW

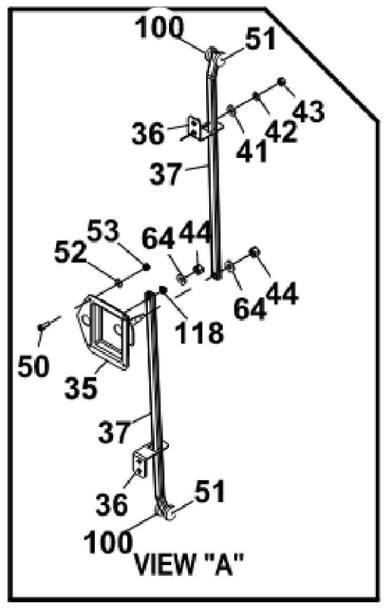

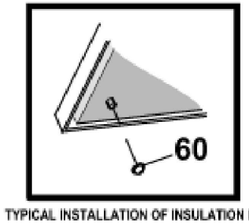

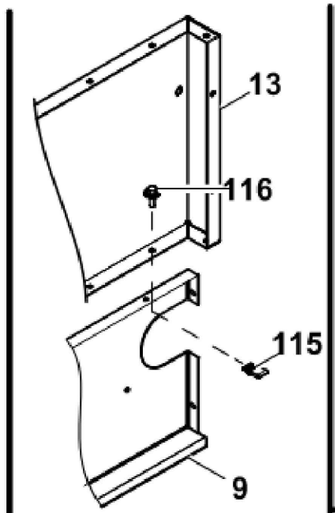

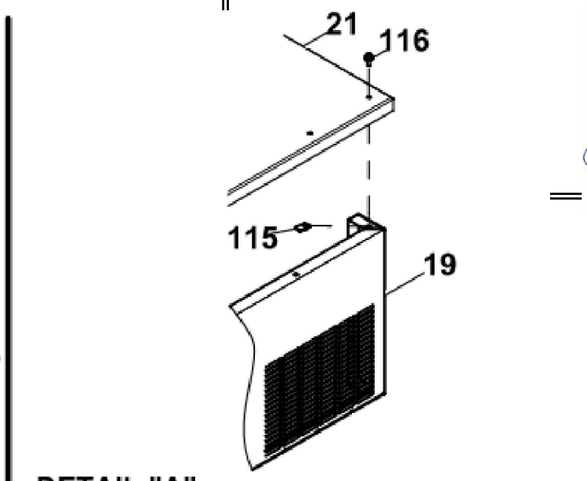

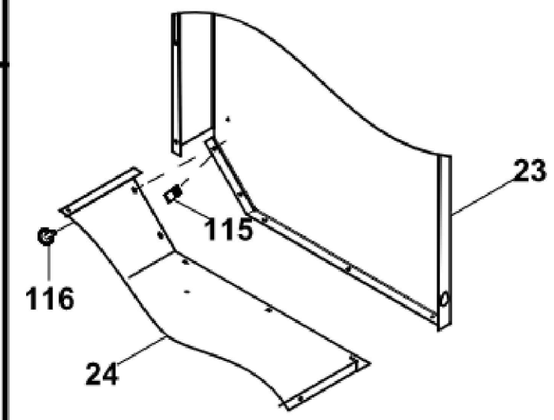

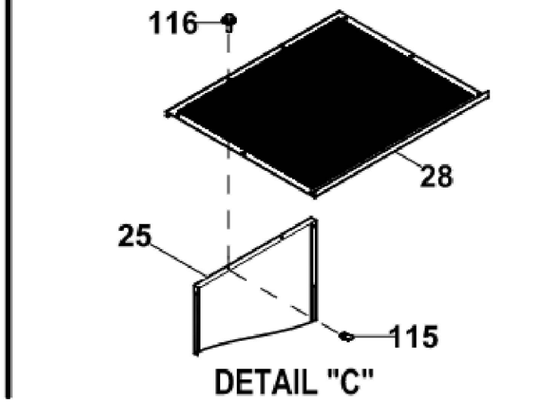

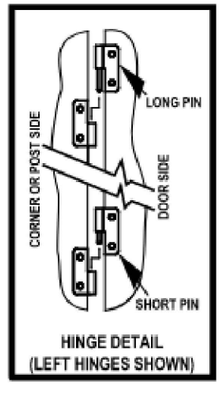

RICHARD NEET, P.E.
PE# 86488 CA# 9885

JULY 3, 2025

RICHARD NEET LICENSE No. P.E. 86488 STATE OF FLORIDA PROFESSIONAL ENGINEER
SIGNED:

ENGINEERING EXPRESS®
POSTAL ADDRESS:
2234 NORTH FEDERAL HWY #7664
BOCA RATON, FL 33431
ENGINEERINGEXPRESS.COM

GENERAC POWER SYSTEMS
S45W29290 Highway 59
Waukesha, WI 53189
PHONE: (262) 544-4811

GENERAC L2A ENCLOSURE MODELS
A-GROUP THRU H-GROUP ENCLOSURES
FLORIDA STATEWIDE APPROVAL (FSA)

REMARKS	DRWN	CHKD	DATE
INIT ISSUE	EPR	RWN	08/08/23
REV/ PER MD COMMENTS	EPR	RWN	05/08/24
REV. PER MD COMMENTS	EPR	RWN	09/19/24
-	-	-	-
-	-	-	-

THIS DOCUMENT IS THE PROPERTY OF ENGINEERING EXPRESS, AND SHALL NOT BE REPRODUCED IN WHOLE OR PART WITHOUT WRITTEN CONSENT OF ENGINEERING EXPRESS. ALTERATIONS, ADDITIONS, OR OTHER MARKINGS TO THIS DOCUMENT ARE NOT PERMITTED AND INVALIDATE OUR CERTIFICATION.
COPYRIGHT ENGINEERING EXPRESS®

23-63327

SCALE: NTS UNLESS NOTED

5 OF 16

STATES FOAM IS ON NEAR SIDE

STATES FOAM IS ON FAR SIDE

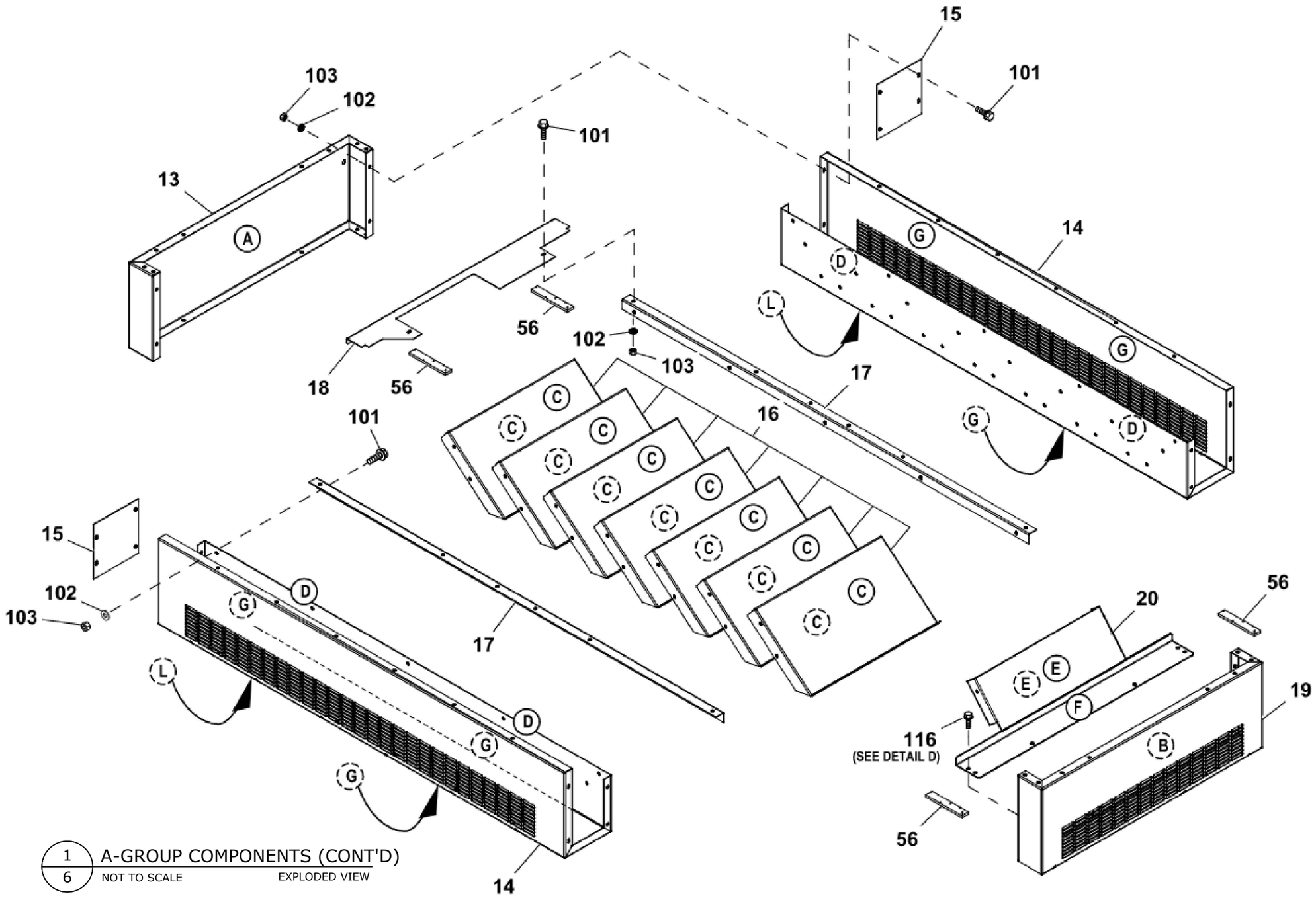

1/6 A-GROUP COMPONENTS (CONT'D)

NOT TO SCALE EXPLODED VIEW

RICHARD NEET, P.E.
PE# 86488 CA# 9885

RICHARD NEET LICENSE No. P.E. 86488 STATE OF FLORIDA PROFESSIONAL ENGINEER

SIGNED:

JULY 3, 2025

FL

ENGINEERING EXPRESS®
POSTAL ADDRESS:
2234 NORTH FEDERAL HWY #7664
BOCA RATON, FL 33431
ENGINEERINGEXPRESS.COM

GENERAC POWER SYSTEMS
S45W29290 Highway 59
Waukesha, WI 53189
PHONE: (262) 544-4811

GENERAC L2A ENCLOSURE MODELS
A-GROUP THRU H-GROUP ENCLOSURES
FLORIDA STATEWIDE APPROVAL (FSA)

REMARKS	DRWN	CHKD	DATE
INIT ISSUE	EPR	RWN	08/08/23
REV/ PER MD COMMENTS	EPR	RWN	05/08/24
REV. PER MD COMMENTS	EPR	RWN	09/19/24
-	-	-	-
-	-	-	-

THIS DOCUMENT IS THE PROPERTY OF ENGINEERING EXPRESS, AND SHALL NOT BE REPRODUCED IN WHOLE OR PART WITHOUT WRITTEN CONSENT OF ENGINEERING EXPRESS. ALTERATIONS, ADDITIONS, OR OTHER MARKINGS TO THIS DOCUMENT ARE NOT PERMITTED AND INVALIDATE OUR CERTIFICATION.

COPYRIGHT ENGINEERING EXPRESS®

23-63327

SCALE: NTS UNLESS NOTED

6 OF 16

7/3/2025 12:29 PM RICHARDNEETPE C:\Users\richardneetpe\engineering express\production - documents\projects\23-\23-63327 generac l2a a-group thru h-group enclosures\work\2023 fbc\drawings & cad\23-63327c generac perf eval.dwg

7/3/2025 12:29 PM RICHARDNEETE C:\Users\richardneetpe\engineering express\production - documents\projects\23-\23-63327 generac l2a a-group thru h-group enclosures\work\2023 fbc\drawings & cad\23-63327c generac perf eval.dwg

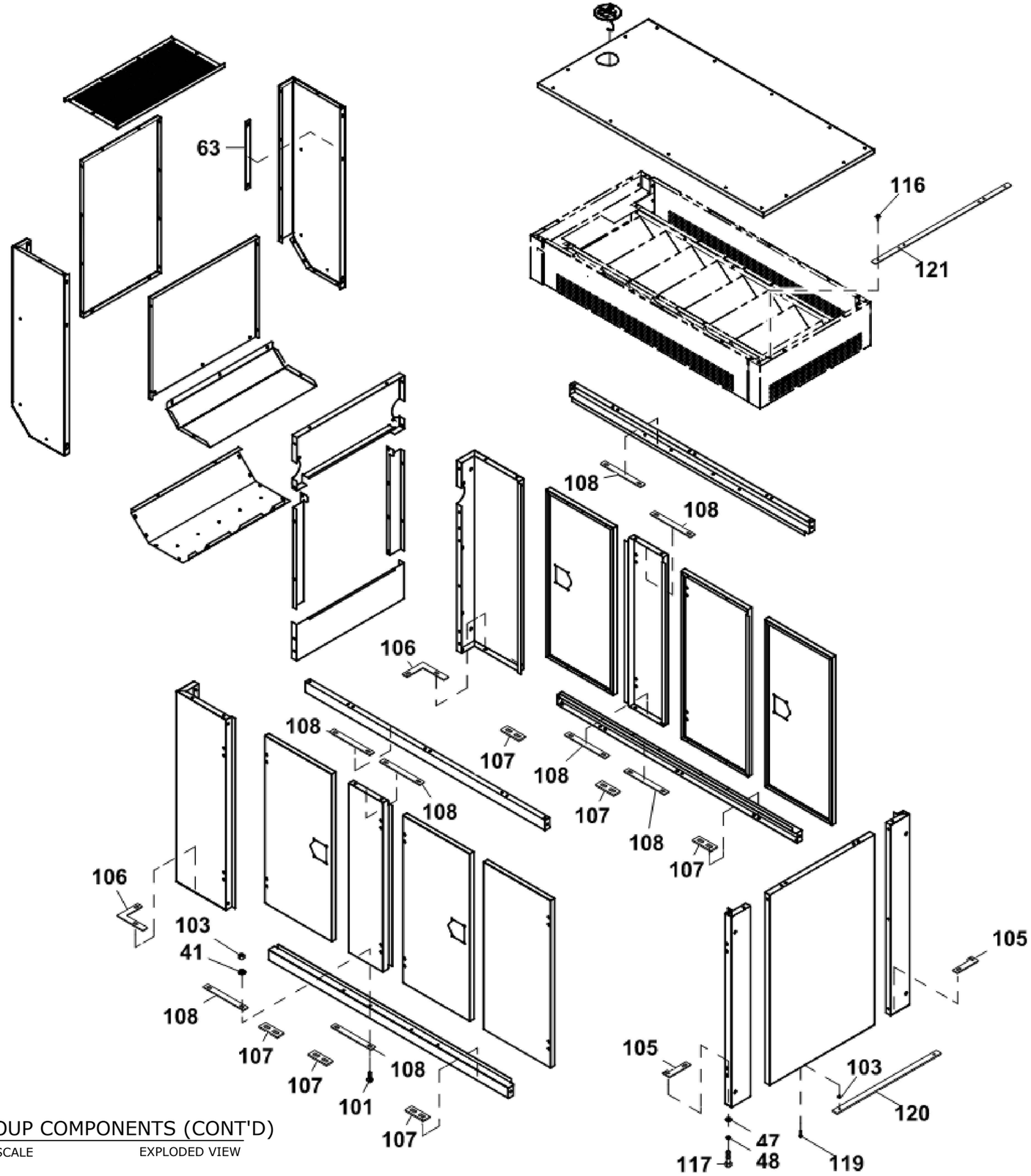

1/7 A-GROUP COMPONENTS (CONT'D)

NOT TO SCALE EXPLODED VIEW

RICHARD NEET, P.E.
PE# 86488 CA# 9885

RICHARD NEET LICENSE No. P.E. 86488 STATE OF FLORIDA PROFESSIONAL ENGINEER

SIGNED:

JULY 3, 2025

FL

ENGINEERING EXPRESS®
POSTAL ADDRESS:
2234 NORTH FEDERAL HWY #7664
BOCA RATON, FL 33431
ENGINEERINGEXPRESS.COM

GENERAC POWER SYSTEMS
S45W29290 Highway 59
Waukesha, WI 53189
PHONE: (262) 544-4811

GENERAC L2A ENCLOSURE MODELS
A-GROUP THRU H-GROUP ENCLOSURES
FLORIDA STATEWIDE APPROVAL (FSA)

REMARKS	DRWN	CHKD	DATE
INIT ISSUE	EPR	RWN	08/08/23
REV/ PER MD COMMENTS	EPR	RWN	05/08/24
REV. PER MD COMMENTS	EPR	RWN	09/19/24
-	-	-	-
-	-	-	-

THIS DOCUMENT IS THE PROPERTY OF ENGINEERING EXPRESS, AND SHALL NOT BE REPRODUCED IN WHOLE OR PART WITHOUT WRITTEN CONSENT OF ENGINEERING EXPRESS. ALTERATIONS, ADDITIONS, OR OTHER MARKINGS TO THIS DOCUMENT ARE NOT PERMITTED AND INVALIDATE OUR CERTIFICATION.

COPYRIGHT ENGINEERING EXPRESS®

23-63327

SCALE: NTS UNLESS NOTED

7 OF 16

ITEM	PART#	QTY.	DESCRIPTION
1	A0001699918	1	AL19 CORNER POST LHR A-GRP 150MPH
2	A0001699912	1	AL19 CORNER POST RHR A-GRP 150MPH
3	A0001699914	1	AL19 CENTER PANEL REAR A-GRP 150MPH
(1)4	0J65360AL0R	2	BRACE SIDE T&B A-GRP 150MPH
(1)5	0J6535AAL0R	1	CNTR SPPRT A-GRP 150MPH
(1)6	0J65350AL0R	1	CNTR SPPRT A-GRP 150MPH
7	A0001707112	1	AL19 CORNER POST LHF A-GRP 150MPH
8	A0001711216	1	AL19 CORNER POST RHF A-GRP 150MPH
9	A0001888190	1	AL19 TOP BRCE 4.5L A-GRP 150MPH
(1)10	0L64480AL0R	1	BRACE FRNT BTM 4.5 A-GRP 150MPH
11	0J92180ST03	1	LEFT BRACE 4.5L G17 A-GRP Y02
12	0J9218AST03	1	RIGHT BRACE 4.5L G17 A-GRP Y02
13	A0001586765	1	AL19 INTAKE OVRHD MOD FRT/RR
14	A0001586773	2	AL19 INTAKE OVERHEAD MOD SIDE
(1)15	0F12540AL0R	2	END CAP OVERHD MOD SIDE_INST
(1)16	0F02940AL0R	7	SPLITTER A-GRP
(1)17	0F08930ST0R	2	ANGLE WATER DEFLECTOR
(1)18	0F08980AL0R	1	BLOCK OFF FRONT OVERHD
19	A0001589447	1	AL19 INTAKE OVERHEAD MODULE REAR
(1)20	0J34650ST0R	1	BAFFLE, OVERHEAD MODULE REAR
(1)21	A0008188276	1	AL0R WLDMNT ROOF L2A A-GRP DUAL CERT
22	A0001595588	1	AL19 DUCT FRONT LH L2A 150MPH
23	A0001595569	1	AL19 DUCT FRONT RH L2A 150MPH
24	0J65290AL0R	1	DUCT BTTM A-GRP 150MPH
25	A0001595557	1	AL19 DUCT FRONT PANEL L2A 150MPH
(1)26	0H49630AL0R	1	DUCT INSIDE BARRIER FRONT RAW
(1)27	0H49640AL0R	1	DUCT INSIDE BARRIER BOTTOM RAW
(1)28	0F02950AL0R	1	TOP FRONT DUCT
(1)29	A0002462979	1	COVER EXHAUST HOLE GALV
30	0C2634A	1	ASSY ACCESS COVER
31	0C3594	4	ASSY M6 HINGE LH TOP
32	0C3594A	2	ASSY M6 HINGE RH TOP
(1)33	A0008188286	4	AL0R DOOR LH SOLID DUAL CERT
(1)34	A0008188288	2	AL0R DOOR RH SOLID DUAL CERT
35	0J0992	4	T-HANDLE, 2-POINT DBL DOOR
(1)36	0J16010ST0R	8	BRACKET, ROD GUIDE
37	0J6048A	8	ROLLER ROD SOLID T-HANDLE
38	0A9881	1	TRIM VINYL SEAL
39	G027958	6	WASHER NYLON .260
40	0A3359	56	SCREW BHSC M6-1.0 X 16 SS
41	G022473	27	WASHER FLAT 1/4-M6 ZINC
42	G022097	23	WASHER LOCK M6-1/4
43	G049813	16	NUT HEX M6-1.0 G8 CLEAR ZINC
(2)44	G027529	REF	NUT HEX LOCK 1/4-20 NY INS
45	G022127	1	NUT HEX 1/4-20 STEEL
46	0C3393	2	SCREW SHOULDER M8-1.25 X 20
47	G022145	18	WASHER FLAT 5/16-M8 ZINC
48	G022129	18	WASHER LOCK M8-5/16
49	G042907	4	SCREW HHC M8-1.25 X 16 C8.8
50	0C6749	16	SCREW PPHM M4-0.7 X 12 SS
51	0G3146	8	RIVET .182/.188 X 1-5/16
52	G080490	16	WASHER FLAT #8 SS
53	0C6748	16	NUT HEX LOCK M4-0.7 SS NYL INS
54	-	-	-
55	-	-	-
56	G066760	1	STRIP SEALANT 1/8 X 1
57	0E7222	32	RAIN SHIELD, DOOR JAMB
58	0C3397	4	SCREW RATCHET BLK NYLON
59	-	-	-
60	078115B	9	WASHER SELF LOCKING BLK #4-40
61	0C3594B	4	ASSY, M6 HINGE LH BOTTOM
62	0C3594C	2	ASSY, M6 HINGE RH BOTTOM
63	0J6519LST0R	2	PLATE ENCL SUPPORT 365MM
(2)64	G022473	REF	WASHER FLAT 1/4-M6 STEEL ZINC
70	10000028799	1	KIT INSUL A-GRP L2A BLK
A	0K0328AA	1	INSULATION OVRHD MDL FRONT
B	0K0328AB	1	INSULATION OVRHD MDL REAR
C	0K0328AC	14	INSULATION OVRHD MDL SPLITTER
D	0K0328AD	4	INSULATION OVRHD MDL SIDE
E	0K0328AE	2	INSULATION ROOF REAR BFL
F	0K0328AF	1	INSULATION REAR ROOF
G	0K0328AG	6	INSULATION OVRHD MDL SIDE
H	0K0328X	1	INSULATION REAR ROOF
J	0K0328Y	1	INSULATION MID ROOF
K	0K0328Z	1	INSULATION FRONT ROOF
71	10000028805	1	KIT INSUL A-GRP L2A W/HI TEMP
L	0E5298Q	2	INSUL HI TEMP OVRHD MDL LH
M	0J1806	1	INSUL HIGH HEAT FRNT CNR POST
N	0J1806A	1	INSUL HIGH HEAT FRNT CNR POST
P	0J1806B	2	INSUL HIGH HEAT FRNT CNR POST
Q	0J1806C	1	INSUL HIGH HEAT FRNT CTR PNL
72	10000028817	1	KIT INSUL A-GRP L2A D4.5 SLV
R	0F0297	1	INSUL DUCT INNER BARRIER
S	0J1765	2	INSULATION
T	0J1765A	4	INSULATION SIDE BRACE
U	0J1765AA	1	INSULATION FRONT DUCT RH
V	0J1765AB	2	INSULATION RH FRONT DUCT
W	0J1765B	2	INSULATION CTR DOOR SUPPORT
X	0J1765C	2	INSULATION FRONT CORNER POST
Y	0J1765D	2	INSULATION FRONT CORNER POST
Z	0J1765DL	1	INSULATION FRONT CORNER POST
AA	0J1765E	1	INSULATION FRONT CENTER PANEL
AB	0J1765V	4	INSULATION LH DOOR SOLID
AC	0J1765W	2	INSULATION RH DOOR SOLID
AD	0J1765X	1	INSULATION FRONT DUCT
AE	0J1765Y	1	INSULATION FRONT DUCT
AF	0J1765Z	1	INSULATION FRONT DUCT LH
100	0G3145	16	ROLLER SOLID ROD HANDLE 150MPH
101	0C2454B	81	SCREW HWHT M6-1 X 30 W/MKS
102	G050190	96	WASHER FLAT .344ID X 1.0OD STEEL
103	G052857	104	NUT TOP LOCK FL M6-1.0
104	-	-	-
(1)105	0J65190ST0R	2	PLATE ENCL SUPPORT L REAR
(1)106	0J6519AST0R	2	PLATE ENCL SUPPORT L FRONT
(1)107	0J6519BST0R	6	PLATE ENCL SUPPORT SIDE BRACE
(1)108	0J6519CST0R	8	PLATE ENCL SUPPORT CTR SPRT
109	0H5517	1	DOOR SEAL RUBBER 12GA & 1/8"
110	G045757	6	SCREW HHC M6-1.0 X 25 C8.8
111	G052250	2	TAPE FOAM 1X1 (22" LG)
(3)112	G066760	2	STRIP SEALANT 1/8 X 1 (3.3FT LG)
(3)113	G066760	1	STRIP SEALANT 1/8 X 1 (19FT LG)
114	A0001699915	2	AL19 BRACE SIDE A-GRP 150MPH
115	A0000429292	48	NUT M6X1 UCLIP 19.5MM SPRING STEEL
116	0K8641	48	SCREW HHFC M6-1.0 X 20 NYL WA
117	0A8258	18	SCREW HHC M8-1.25 X 25 C10.9
118	G022769	4	WASHER LOCK INTERNAL #10
119	10000031792	25	SCREW HHFTT M6-1.0 X 25
120	A0008188279	1	ST03 REAR PANEL LOWER SUPPORT PLATE
121	A0008188281	1	ST03 REAR PANEL UPPER SUPPORT PLATE

1/8 A-GROUP COMPONENTS (CONT'D)

RICHARD NEET, P.E.
PE# 86488 CA# 9885

JULY 3, 2025

RICHARD NEET LICENSE No. P.E. 86488 STATE OF FLORIDA PROFESSIONAL ENGINEER

SIGNED:

FL

ENGINEERING EXPRESS
POSTAL ADDRESS:
2234 NORTH FEDERAL HWY #7664
BOCA RATON, FL 33431
ENGINEERINGEXPRESS.COM

GENERAC POWER SYSTEMS
S45W29290 Highway 59
Waukesha, WI 53189
PHONE: (262) 544-4811

GENERAC L2A ENCLOSURE MODELS
A-GROUP THRU H-GROUP ENCLOSURES
FLORIDA STATEWIDE APPROVAL (FSA)

REMARKS	DRWN	CHKD	DATE
INIT ISSUE	EPR	RWN	08/08/23
REV./ PER MD COMMENTS	EPR	RWN	05/08/24
REV. PER MD COMMENTS	EPR	RWN	09/19/24
-	-	-	-
-	-	-	-

THIS DOCUMENT IS THE PROPERTY OF ENGINEERING EXPRESS, AND SHALL NOT BE REPRODUCED IN WHOLE OR PART WITHOUT WRITTEN CONSENT OF ENGINEERING EXPRESS. ALTERATIONS, ADDITIONS, OR OTHER MARKINGS TO THIS DOCUMENT ARE NOT PERMITTED AND INVALIDATE OUR CERTIFICATION.

COPYRIGHT ENGINEERING EXPRESS®

23-63327

SCALE: NTS UNLESS NOTED

8

OF 16

7/3/2025 12:29 PM RICHARDNEET[C:\Users\richardneet\pe\engineering express\production - documents\projects\23-63327 generac l2a a-group thru h-group enclosures\work\2023 fbc\drawings & cad\23-63327c generac perf eval.dwg

7/3/2025 12:29 PM RICHARDNEET P:\users\richardneetpe\engineering express\production - documents\projects\23-\23-63327 generac l2a a-group thru h-group enclosures\work\2023 fbc\drawings & cad\23-63327c generac perf eval.dwg

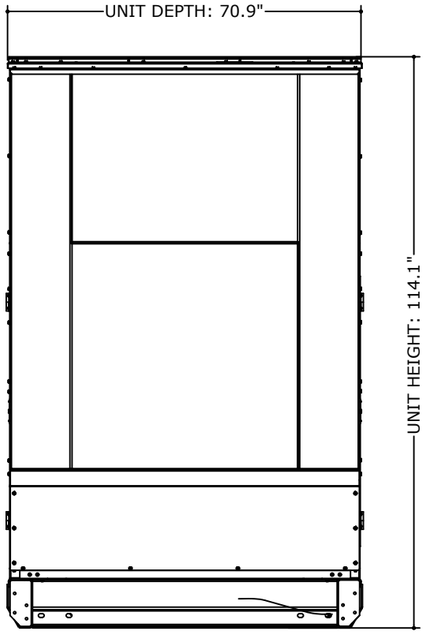

1/9 ENCLOSURE SIZE (H-GROUP)
NOT TO SCALE LEFT VIEW

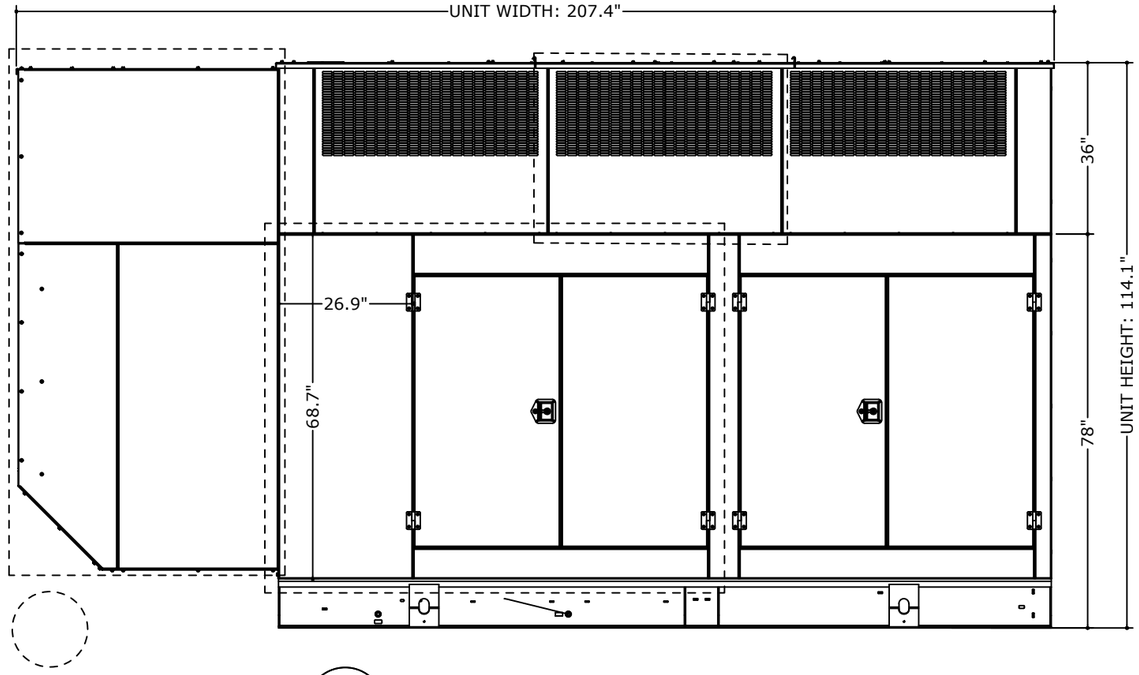

2/9 ENCLOSURE SIZE (H-GROUP)
NOT TO SCALE FRONT VIEW

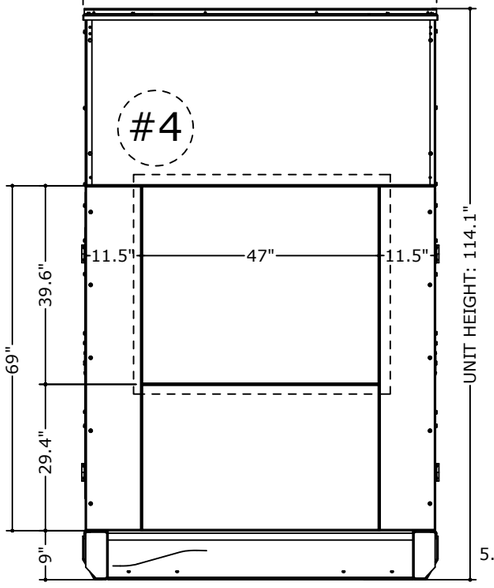

3/9 ENCLOSURE SIZE (H-GROUP)
NOT TO SCALE RIGHT VIEW

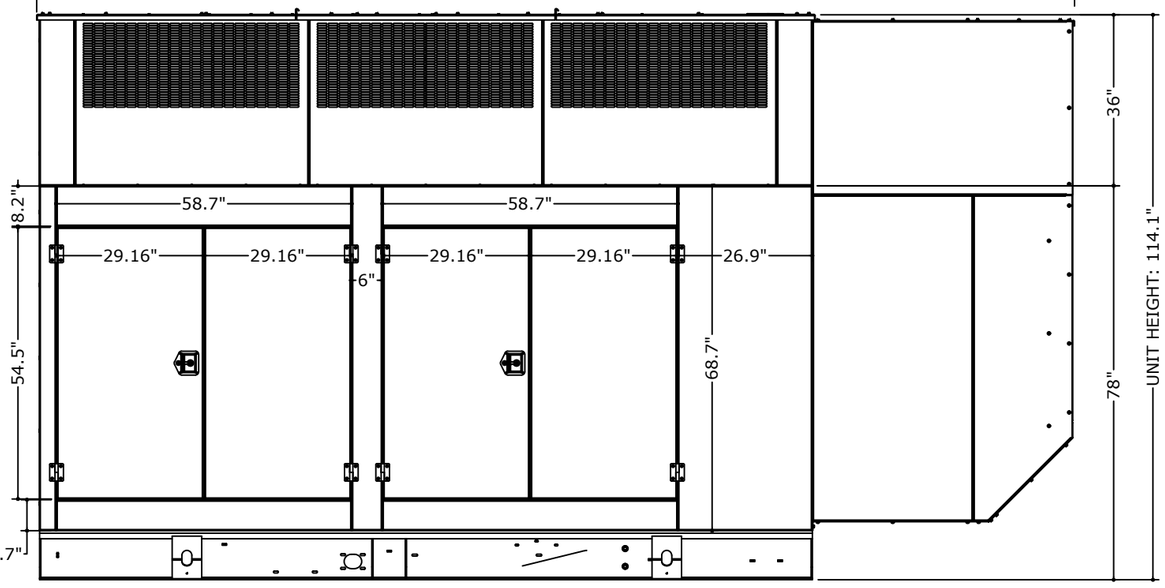

4/9 ENCLOSURE SIZE (H-GROUP)
NOT TO SCALE BACK VIEW

RICHARD NEET, P.E.
PE# 86488 CA# 9885

RICHARD NEET LICENSE No. P.E. 86488 STATE OF FLORIDA PROFESSIONAL ENGINEER

SIGNED:

JULY 3, 2025

FL

(H-GROUP) ENCLOSURE SIZE

ENGINEERING EXPRESS
POSTAL ADDRESS:
2234 NORTH FEDERAL HWY #7664
BOCA RATON, FL 33431
ENGINEERINGEXPRESS.COM

GENERAC POWER SYSTEMS
S45W29290 Highway 59
Waukesha, WI 53189
PHONE: (262) 544-4811

GENERAC L2A ENCLOSURE MODELS
A-GROUP THRU H-GROUP ENCLOSURES
FLORIDA STATEWIDE APPROVAL (FSA)

REMARKS	DRWN	CHKD	DATE
INIT ISSUE	EPR	RVN	08/08/23
REV/ PER MD COMMENTS	EPR	RVN	05/08/24
REV. PER MD COMMENTS	EPR	RVN	09/19/24
-	-	-	-
-	-	-	-

THIS DOCUMENT IS THE PROPERTY OF ENGINEERING EXPRESS, AND SHALL NOT BE REPRODUCED IN WHOLE OR PART WITHOUT WRITTEN CONSENT OF ENGINEERING EXPRESS. ALTERATIONS, ADDITIONS, OR OTHER MARKINGS TO THIS DOCUMENT ARE NOT PERMITTED AND INVALIDATE OUR CERTIFICATION.

COPYRIGHT ENGINEERING EXPRESS®

23-63327

SCALE: NTS UNLESS NOTED

9 OF 16

750 kW (H-GROUP) ENCLOSURE SIZE

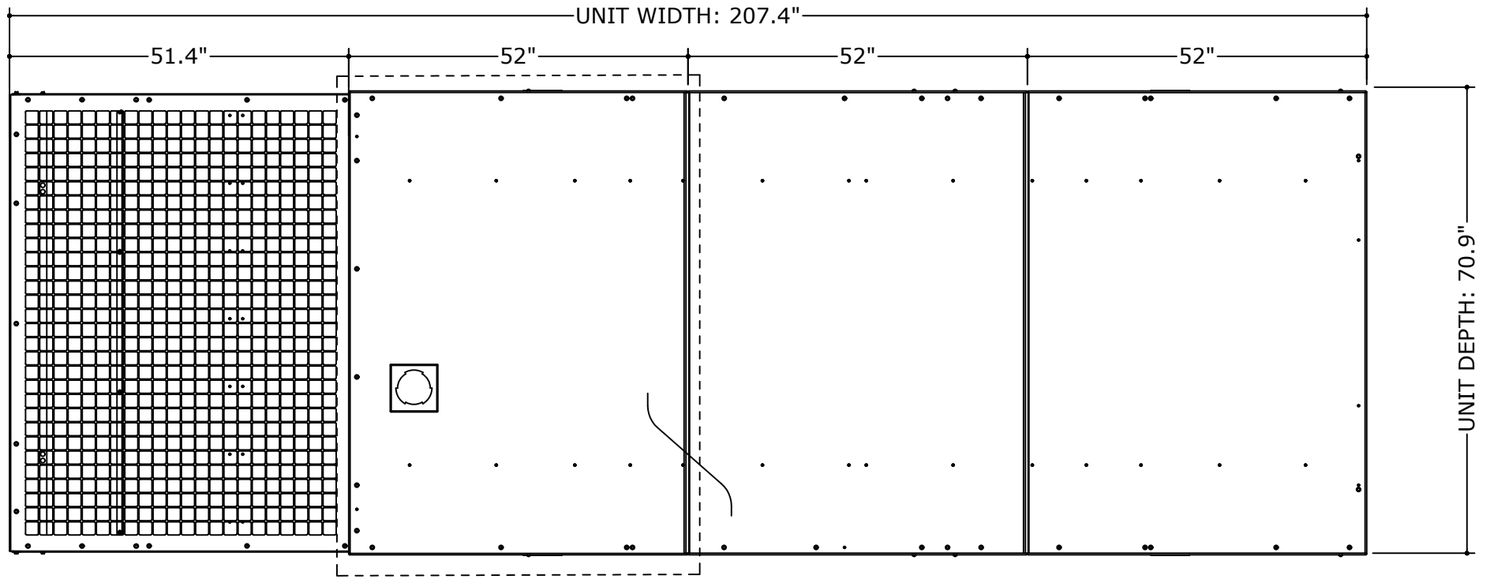

1/10 ENCLOSURE SIZE (H-GROUP)
NOT TO SCALE TOP VIEW

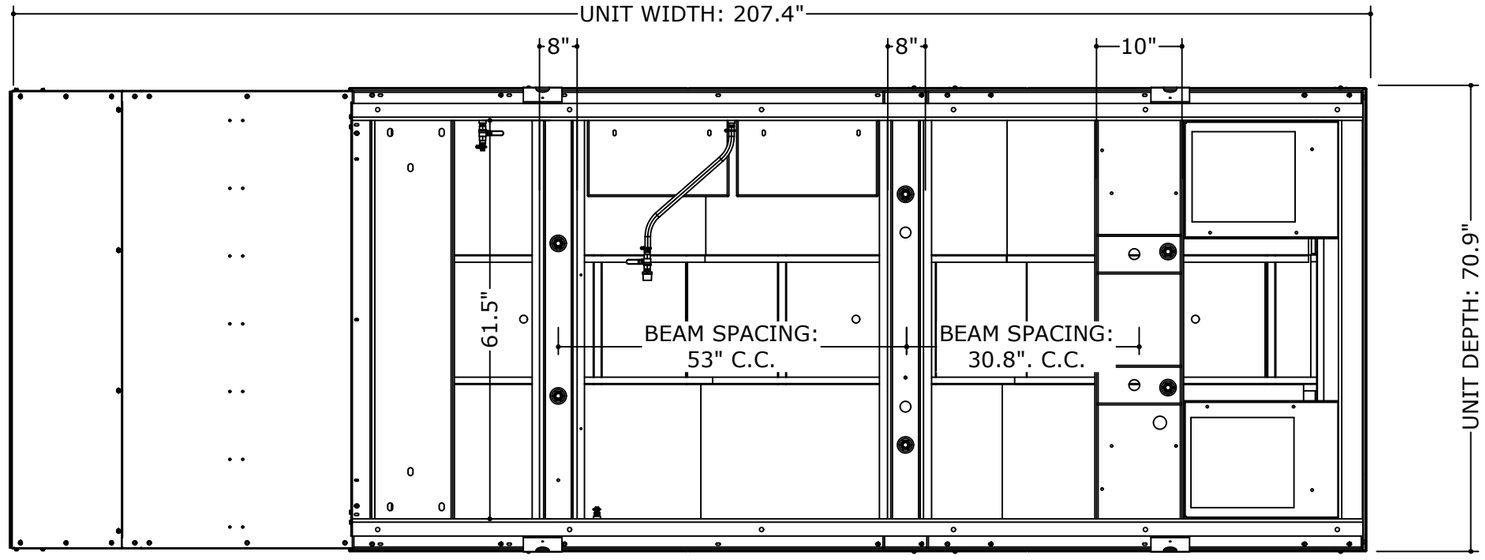

2/10 ENCLOSURE SIZE (H-GROUP)
NOT TO SCALE BOTTOM VIEW

RICHARD NEET, P.E.
PE# 86488 CA# 9885

RICHARD NEET LICENSE No. P.E. 86488 STATE OF FLORIDA PROFESSIONAL ENGINEER

SIGNED:

JULY 3, 2025

FL

ENGINEERING EXPRESS®
POSTAL ADDRESS:
2234 NORTH FEDERAL HWY #7664
BOCA RATON, FL 33431
ENGINEERINGEXPRESS.COM

GENERAC POWER SYSTEMS
S45W29290 Highway 59
Waukesha, WI 53189
PHONE: (262) 544-4811

GENERAC L2A ENCLOSURE MODELS
A-GROUP THRU H-GROUP ENCLOSURES
FLORIDA STATEWIDE APPROVAL (FSA)

REMARKS	DRWN	CHKD	DATE
INIT ISSUE	EPR	RWN	08/08/23
REV/ PER MD COMMENTS	EPR	RWN	05/08/24
REV. PER MD COMMENTS	EPR	RWN	09/19/24
-	-	-	-
-	-	-	-

THIS DOCUMENT IS THE PROPERTY OF ENGINEERING EXPRESS, AND SHALL NOT BE REPRODUCED IN WHOLE OR PART WITHOUT WRITTEN CONSENT OF ENGINEERING EXPRESS. ALTERATIONS, ADDITIONS, OR OTHER MARKINGS TO THIS DOCUMENT ARE NOT PERMITTED AND INVALIDATE OUR CERTIFICATION.

COPYRIGHT ENGINEERING EXPRESS®

23-63327

SCALE: NTS UNLESS NOTED

10 OF 16

7/3/2025 12:29 PM RICHARDNEET C:\Users\richardneetpe\engineering express\production - documents\projects\23-\23-63327 generac l2a a-group thru h-group enclosures\work\2023 fbc\drawings & cad\23-63327c generac perf eval.dwg

C:\23-\23-63327 generac l2a a-group thru h-group enclosures\work\2023 fbc\drawings & cad\23-63327c generac perf eval.dwg 7/3/2025 12:29 PM RICHARDNEET C:\Users\richardneetpe\engineering express\production - documents\projects\23-\23-63327 generac l2a a-group thru h-group enclosures\work\2023 fbc\drawings & cad\23-63327c generac perf eval.dwg

ENCLOSURE TIE-DOWN:

(H-GROUP ENCLOSURE SIZE)

TIE-DOWN DIRECTIVE:

OPTION 1: ENCLOSURE TO CONCRETE:
ATTACH THE UNIT BASE (SKID) TO THE 3000 PSI MIN. REGULAR-WEIGHT CONCRETE HOST STRUCTURE BY OTHERS WITH 5/8" Ø HILTI KWIK BOLT 3 CS ANCHORS (OR EQUIVALENT) WITH 4" EMBEDMENT, 8-1/2" MIN. EDGE DISTANCE TO ANY EDGE OF THE CONCRETE, (1) ANCHOR PER MOUNTING HOLE AS SHOWN BELOW (6 PER SIDE, 12 TOTAL). HOST CONCRETE THICKNESS SHALL BE 1.5X THE ANCHOR EMBEDMENT (6" MIN.).

OPTION 2: ENCLOSURE TO TANK & TANK TO CONCRETE
ATTACH THE UNIT BASE (SKID) TO THE STEEL TANK WITH 5/8" Ø BOLTS W/ STD. NUTS/WASHERS, (1) ANCHOR PER MOUNTING HOLE AS SHOWN BELOW (6 PER SIDE, 12 TOTAL). ATTACH TANK TO THE 3000 PSI MIN. REGULAR-WEIGHT CONCRETE HOST STRUCTURE BY OTHERS WITH HILTI KWIK BOLT 3 CS ANCHORS (OR EQUIVALENT) WITH 4" EMBEDMENT, 8-1/2" MIN. EDGE DISTANCE TO ANY EDGE OF THE CONCRETE, (6) ANCHORS PER LONG SIDE AND (2) PER SHORT SIDE (16 TOTAL). HOST CONCRETE THICKNESS SHALL BE 1.5X THE ANCHOR EMBEDMENT (6" MIN.).

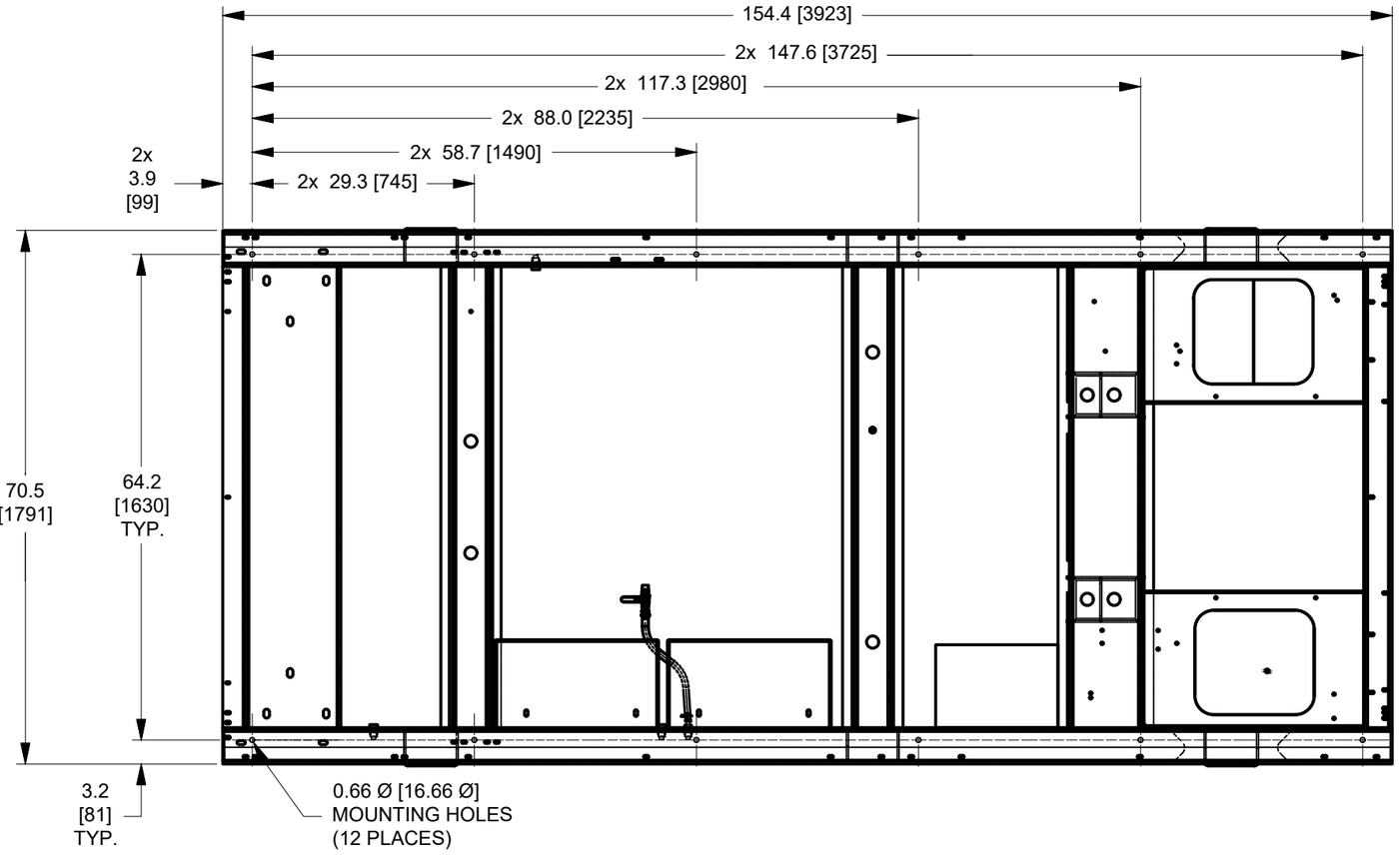

1/11 ENCLOSURE SIZE (H-GROUP) UNIT BASE MOUNTING HOLES
NOT TO SCALE BOTTOM VIEW

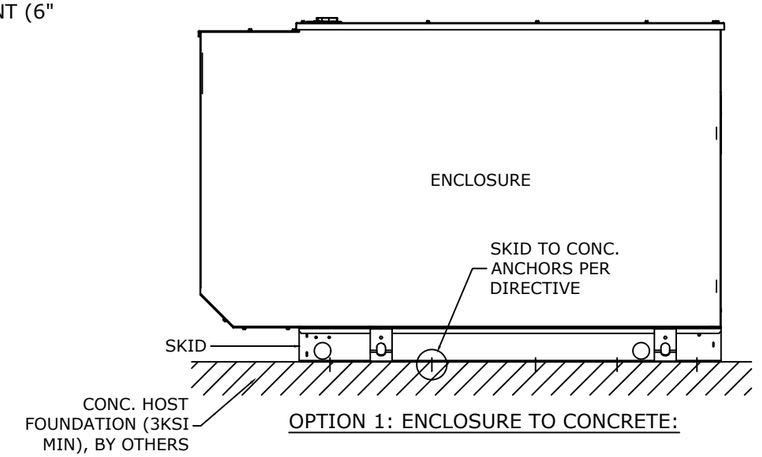

OPTION 1: ENCLOSURE TO CONCRETE:

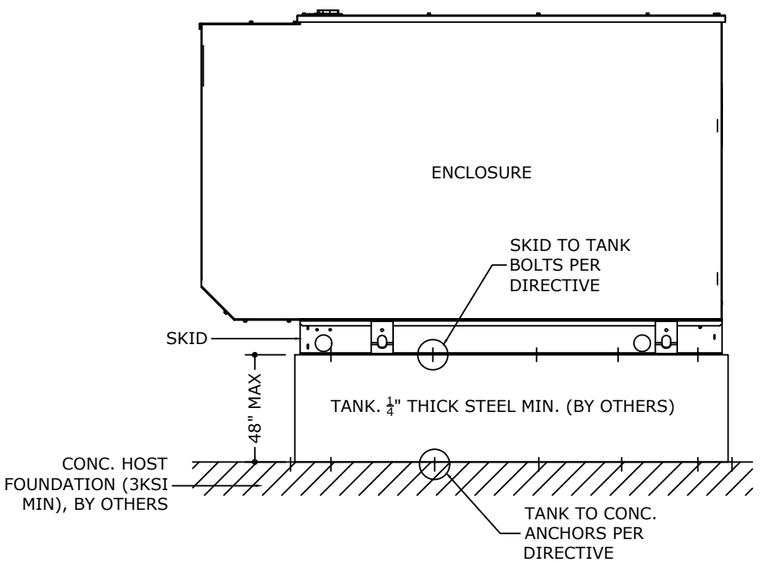

OPTION 2: ENCLOSURE TO TANK & TANK TO CONCRETE

RICHARD NEET, P.E.
PE# 86488 CA# 9885

RICHARD NEET LICENSE No. P.E. 86488 STATE OF FLORIDA PROFESSIONAL ENGINEER

SIGNED:

JULY 3, 2025

FL

ENGINEERING EXPRESS®
POSTAL ADDRESS:
2234 NORTH FEDERAL HWY #7664
BOCA RATON, FL 33431
ENGINEERINGEXPRESS.COM

GENERAC POWER SYSTEMS
S45W29290 Highway 59
Waukesha, WI 53189
PHONE: (262) 544-4811

GENERAC L2A ENCLOSURE MODELS
A-GROUP THRU H-GROUP ENCLOSURES
FLORIDA STATEWIDE APPROVAL (FSA)

REMARKS	DRWN	CHKD	DATE
INIT ISSUE	EPR	RWN	08/08/23
REV/ PER MD COMMENTS	EPR	RWN	05/08/24
REV. PER MD COMMENTS	EPR	RWN	09/19/24
-	-	-	-
-	-	-	-

THIS DOCUMENT IS THE PROPERTY OF ENGINEERING EXPRESS, AND SHALL NOT BE REPRODUCED IN WHOLE OR PART WITHOUT WRITTEN CONSENT OF ENGINEERING EXPRESS. ALTERATIONS, ADDITIONS, OR OTHER MARKINGS TO THIS DOCUMENT ARE NOT PERMITTED AND INVALIDATE OUR CERTIFICATION.

COPYRIGHT ENGINEERING EXPRESS®

23-63327

SCALE: NTS UNLESS NOTED

11 OF 16

7/3/2025 12:29 PM RICHARDNEET C:\Users\richardneetpe\engineering express\production - documents\projects\23-\projects\23-63327 generac l2a a-group thru h-group enclosures\work\2023 fbc\drawings & cad\23-63327c generac perf eval.dwg

RICHARD NEET, P.E.
PE# 86488 CA# 9885

JULY 3, 2025

RICHARD NEET LICENSE No. P.E. 86488 STATE OF FLORIDA PROFESSIONAL ENGINEER SIGNED

(SEE DETAIL C)

STATES FOAM IS ON NEAR SIDE

STATES FOAM IS ON FAR SIDE

DETAIL "E"

HINGE DETAIL (LEFT HINGES SHOWN)

CORNER OR POST SIDE

DOOR SIDE

LONG PIN

SHORT PIN

DETAIL "D"

DETAIL "A"

DETAIL "B"

DETAIL "C"

SEE DETAIL B)

SEE DETAIL "E"

106,107

1 / 12 H-GROUP COMPONENTS

NOT TO SCALE EXPLODED VIEW

ENGINEERING EXPRESS®
POSTAL ADDRESS:
2234 NORTH FEDERAL HWY #7664
BOCA RATON, FL 33431
ENGINEERINGEXPRESS.COM

GENERAC POWER SYSTEMS
S45W29290 Highway 59
Waukesha, WI 53189
PHONE: (262) 544-4811

GENERAC L2A ENCLOSURE MODELS
A-GROUP THRU H-GROUP ENCLOSURES
FLORIDA STATEWIDE APPROVAL (FSA)

REMARKS	DRWN	CHKD	DATE
INIT ISSUE	EPR	RWN	08/08/23
REV/ PER MD COMMENTS	EPR	RWN	05/08/24
REV. PER MD COMMENTS	EPR	RWN	09/19/24
-	-	-	-
-	-	-	-

THIS DOCUMENT IS THE PROPERTY OF ENGINEERING EXPRESS, AND SHALL NOT BE REPRODUCED IN WHOLE OR PART WITHOUT WRITTEN CONSENT OF ENGINEERING EXPRESS. ALTERATIONS, ADDITIONS, OR OTHER MARKINGS TO THIS DOCUMENT ARE NOT PERMITTED AND INVALIDATE OUR CERTIFICATION.

COPYRIGHT ENGINEERING EXPRESS®

23-63327

SCALE: NTS UNLESS NOTED

12 OF 16

7/3/2025 12:29 PM RICHARDNEET C:\Users\richardneetpe\engineering express\production - documents\projects\23-\23-63327 generac l2a a-group thru h-group enclosures\work\2023 fbc\drawings & cad\23-63327c generac perf eval.dwg

RICHARD NEET, P.E.
PE# 86488 CA# 9885

JULY 3, 2025

RICHARD NEET LICENSE No. P.E. 86488 STATE OF FLORIDA PROFESSIONAL ENGINEER

SIGNED:

STATES FOAM IS ON NEAR SIDE

STATES FOAM IS ON FAR SIDE

TYPICAL INSTALLATION OF ROOFTOP INSULATION ONLY

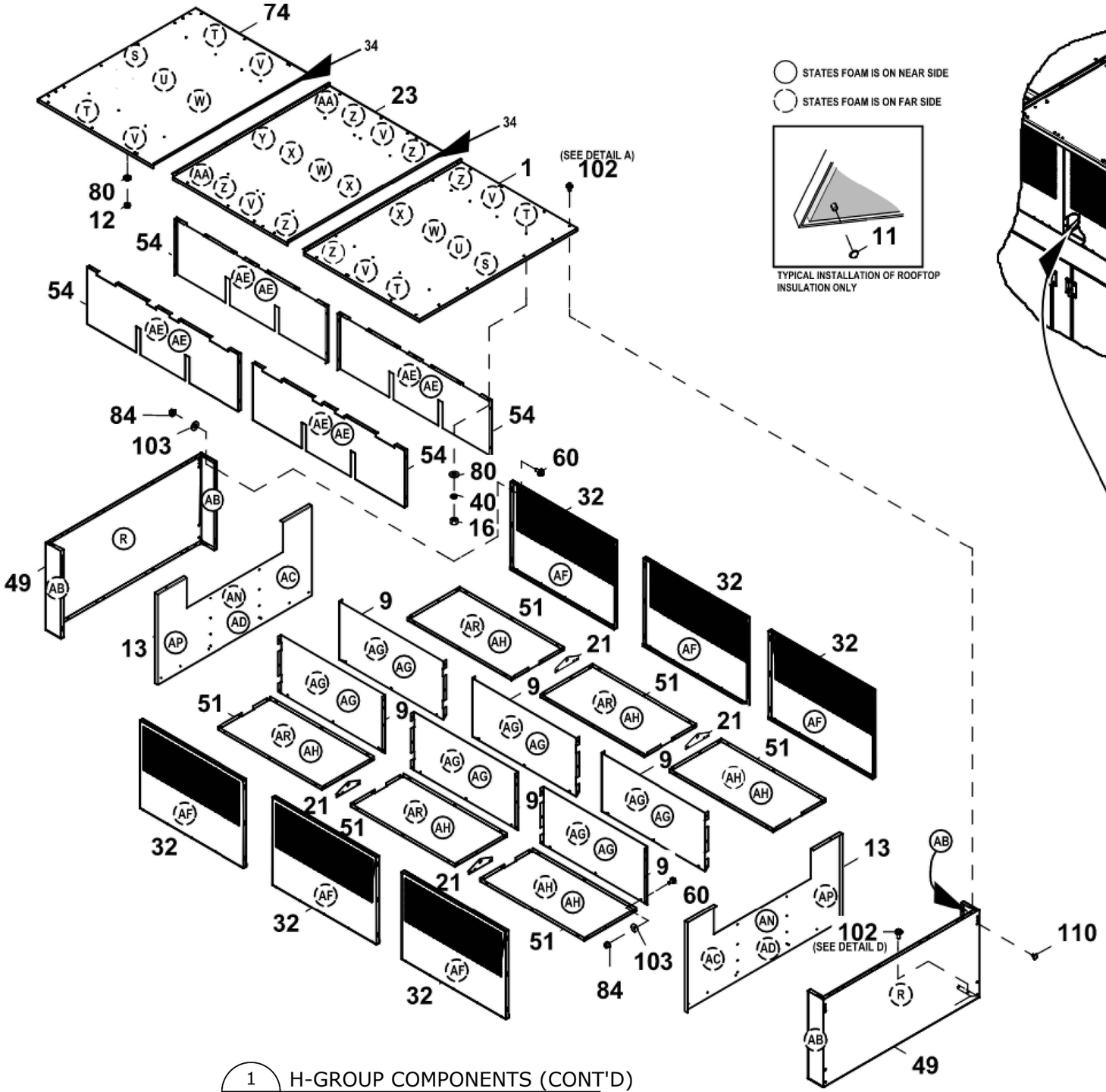

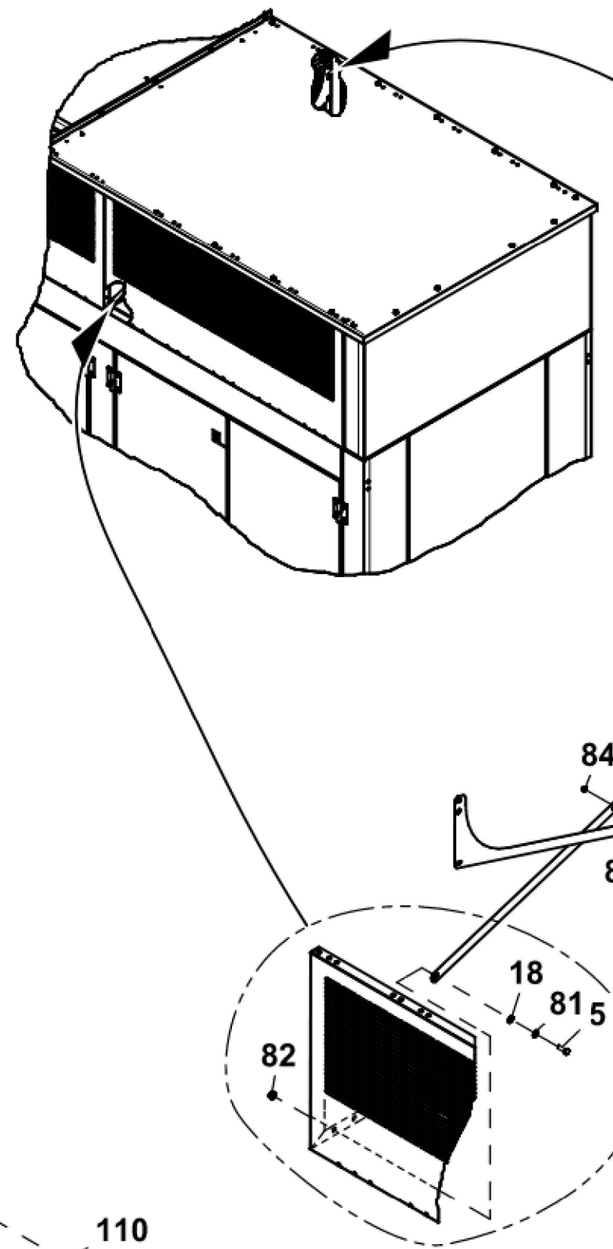

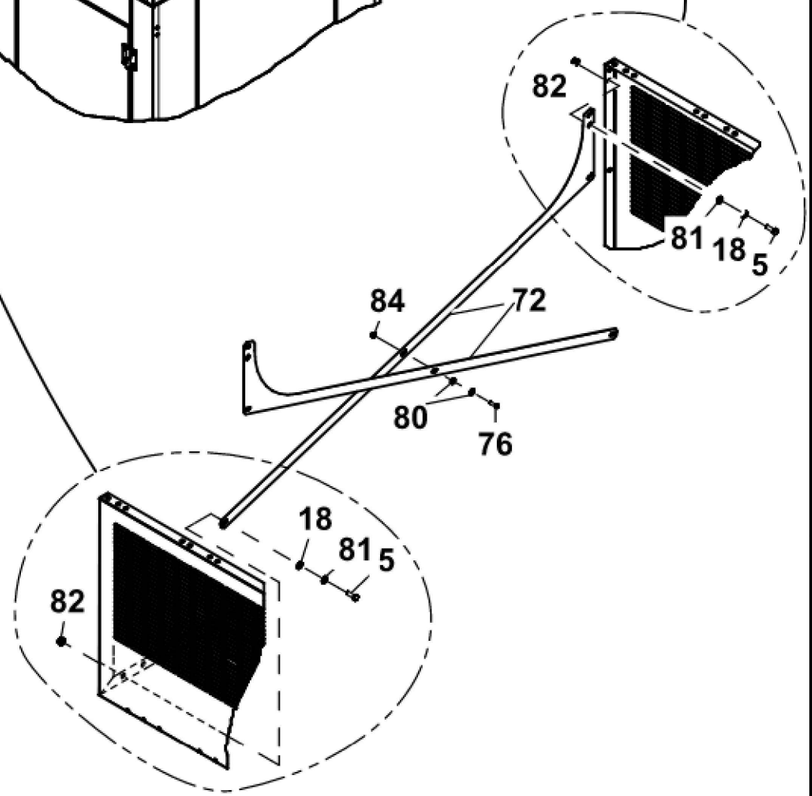

1/13 H-GROUP COMPONENTS (CONT'D)
NOT TO SCALE EXPLODED VIEW

ENGINEERING EXPRESS

POSTAL ADDRESS:
2234 NORTH FEDERAL HWY #7664
BOCA RATON, FL 33431
ENGINEERINGEXPRESS.COM

GENERAC POWER SYSTEMS

S45W29290 Highway 59
Waukesha, WI 53189
PHONE: (262) 544-4811

GENERAC L2A ENCLOSURE MODELS
A-GROUP THRU H-GROUP ENCLOSURES
FLORIDA STATEWIDE APPROVAL (FSA)

REMARKS	DRWN	CHKD	DATE
INIT ISSUE	EPR	RWN	08/08/23
REV/ PER MD COMMENTS	EPR	RWN	05/08/24
REV. PER MD COMMENTS	EPR	RWN	09/19/24
-	-	-	-
-	-	-	-

THIS DOCUMENT IS THE PROPERTY OF ENGINEERING EXPRESS, AND SHALL NOT BE REPRODUCED IN WHOLE OR PART WITHOUT WRITTEN CONSENT OF ENGINEERING EXPRESS. ALTERATIONS, ADDITIONS, OR OTHER MARKINGS TO THIS DOCUMENT ARE NOT PERMITTED AND INVALIDATE OUR CERTIFICATION.

COPYRIGHT ENGINEERING EXPRESS®

23-63327

SCALE: NTS UNLESS NOTED

13 OF 16

C:\Users\richardneetpe\engineering express\production - documents\projects\23-63327 generac l2a a-group thru h-group enclosures\work\2023 fbc\drawings & cad\23-63327c generac perf eval.dwg
7/3/2025 12:29 PM RICHARDNEETPE

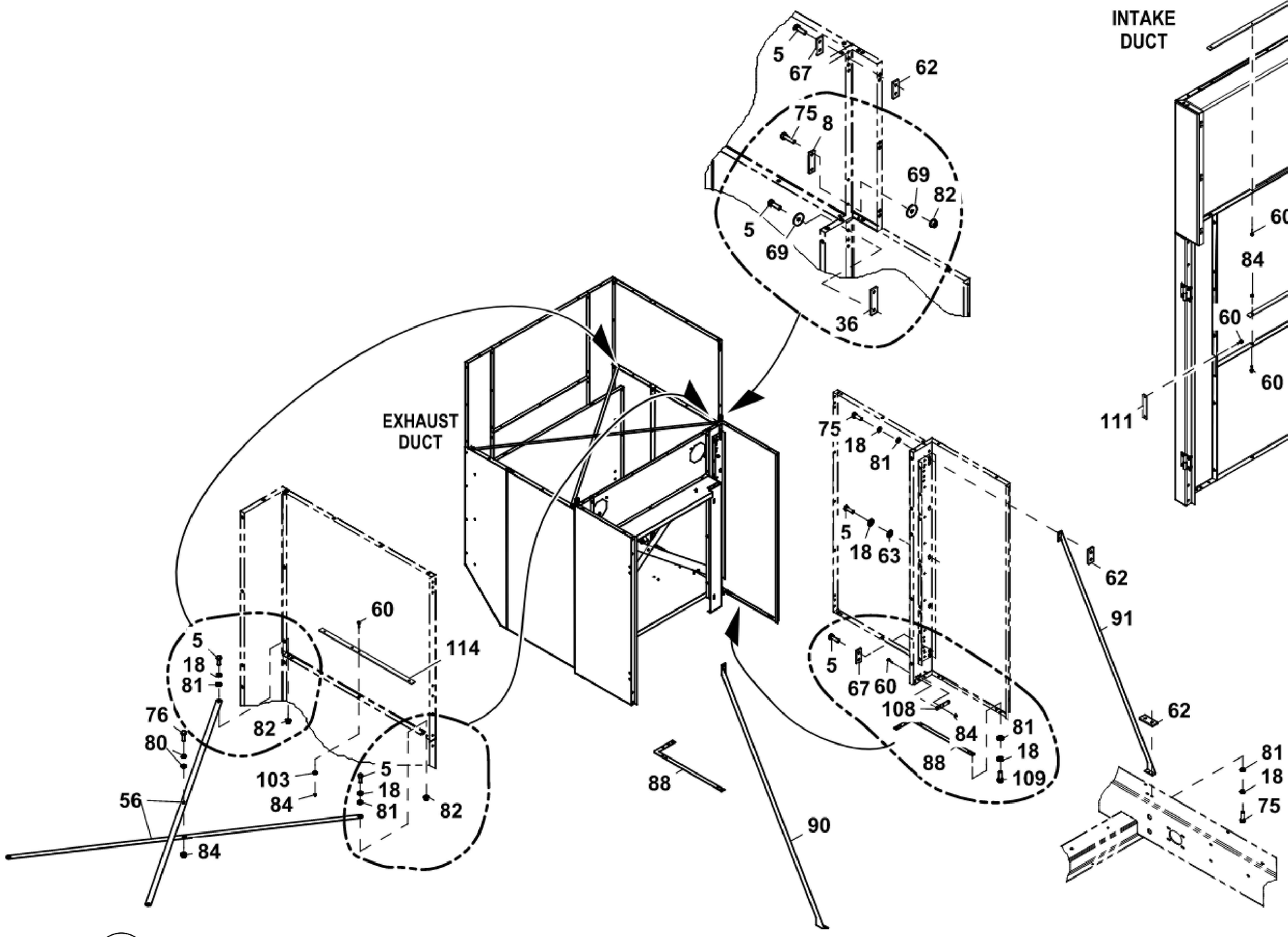

1 / 14 H-GROUP COMPONENTS (CONT'D)
NOT TO SCALE EXPLODED VIEW

RICHARD NEET, P.E.
PE# 86488 CA# 9885

JULY 3, 2025

RICHARD NEET LICENSE No. P.E. 86488 STATE OF FLORIDA PROFESSIONAL ENGINEER SIGNED

ENGINEERING EXPRESS®
POSTAL ADDRESS:
2234 NORTH FEDERAL HWY #7664
BOCA RATON, FL 33431
ENGINEERINGEXPRESS.COM

GENERAC POWER SYSTEMS
S45W29290 Highway 59
Waukesha, WI 53189
PHONE: (262) 544-4811

GENERAC L2A ENCLOSURE MODELS
A-GROUP THRU H-GROUP ENCLOSURES
FLORIDA STATEWIDE APPROVAL (FSA)

REMARKS	DRWN	CHKD	DATE
INIT ISSUE	EPR	RWN	08/08/23
REV/ PER MD COMMENTS	EPR	RWN	05/08/24
REV. PER MD COMMENTS	EPR	RWN	09/19/24
-	-	-	-
-	-	-	-

THIS DOCUMENT IS THE PROPERTY OF ENGINEERING EXPRESS, AND SHALL NOT BE REPRODUCED IN WHOLE OR PART WITHOUT WRITTEN CONSENT OF ENGINEERING EXPRESS. ALTERATIONS, ADDITIONS, OR OTHER MARKINGS TO THIS DOCUMENT ARE NOT PERMITTED AND INVALIDATE OUR CERTIFICATION.

COPYRIGHT ENGINEERING EXPRESS®

23-63327

SCALE: NTS UNLESS NOTED

ITEM	PART#	QTY.	DESCRIPTION
(1)1	A0008117089	1	AL0R ROOF WLDMNT L2A BACK DUAL CERT
(1)2	0K02890ST0R	4	PLATE, SEISMIC ENCLOSURE
3	G045771	8	NUT HEX M8-1.25 G8 CLEAR ZINC
4	G069918	6	NUT HEX M12-1.25 G8 YEL CHR
5	G043107	38	SCREW HHC M8-1.25 X 25 C8.8
6	G066760	1	STRIP SEALANT 1/8 X 1
(1)7	0J82370AL0R	1	DUCT FRONT TOP
(1)8	0K02920ST0R	2	PLATE SEISMIC ENCLOSURE
9	10000022484	6	AL05 INTAKE OVRHD MODULE INNER L2A
	10000022448	6	AL18 INTAKE OVRHD MODULE INNER L2A
	10000022485	6	AL19 INTAKE OVRHD MODULE INNER L2A
10	A0000510146	1	AL05 DUCT BOTTOM FRONT
	A0000510148	1	AL18 DUCT BOTTOM FRONT
	A0000510150	1	AL19 DUCT BOTTOM FRONT
11	078115B	70	WASHER SELF LOCKING BLK #4-40
12	0G0641	20	PLUG PLASTIC .375
13	0L66540AL05	2	ENDPLATE OVRHD MD L2A H-GRP
	0L66540AL18	2	ENDPLATE OVRHD MD L2A H-GRP
	0L66540AL19	2	ENDPLATE OVRHD MD L2A H-GRP
14	A0000510160	2	AL05 DUCT FRONT CENTER SIDE L2A
	A0000510147	2	AL18 DUCT FRONT CENTER SIDE L2A
	A0000510153	2	AL19 DUCT FRONT CENTER SIDE L2A
15	0H5517	1	DOOR SEAL RUBBER 12GA & 1/8"
16	G049813	44	NUT HEX M6-1.0 G8 CLEAR ZINC
17	A0008437796	1	AL05 DEFLECTOR REAR INTAKE DUAL CERT
	A0008437794	1	AL18 DEFLECTOR REAR INTAKE DUAL CERT
	A0008117093	1	AL19 DEFLECTOR REAR INTAKE DUAL CERT
18	G022129	56	WASHER LOCK M8-5/16
19	G022769	4	WASHER LOCK INT #10
20	G080490	16	WASHER FLAT #8 SS
(1)21	0C85040ST0R	4	LIFT PLATE, ENCLOSURE
22	0A5991	64	SCREW BHSC M8-1.25 X 16 SS
(1)23	A0008117087	1	AL0R ROOF WLDMNT L2A MID DUAL CERT
24	0C6749	16	SCREW PPHM M4-0.7 X 12 SS
(1)25	0J21590AL0R	4	DOOR LH SOLID
26	A0001045895	1	AL05 CORNER POST LH REAR SEISMIC
	A0000919109	1	AL18 CORNER POST LH REAR SEISMIC
	A0000919110	1	AL19 CORNER POST LH REAR SEISMIC
27	(3)(4) A0000919047	1	AL05 TOP FRONT BRACE
	(3)(4) A0000919048	1	AL18 TOP FRONT BRACE
	(3)(4) A0000919049	1	AL19 TOP FRONT BRACE
	(5) A0000878398	1	AL05 TOP FRONT BRACE 21.9L G30
	(5) A0000870082	1	AL18 TOP FRONT BRACE 21.9L G30
	(5) A0000870083	1	AL19 TOP FRONT BRACE 21.9L G30
	(5) 0K61060ST0R	1	TOP FRONT BRACE 21.9L G30
28	0C3595A	4	ASSY M8 HINGE RH TOP
29	0C3595	4	ASSY M8 HINGE LH TOP
30	0J6048B	8	ROLLER ROD SOLID T-HANDLE
31	0C6748	16	NUT HEX LOCK M4-0.7 SS NYL INS
32	A0000510164	6	AL05 INTAKE OVRHD MODULE L2A
	A0000510165	6	AL18 INTAKE OVRHD MODULE L2A
	A0000510166	6	AL19 INTAKE OVRHD MODULE L2A
(1)33	0J95130ST0R	2	SUPPORT VERTICAL FRONT DUCT RAW
34	G066760	1	STRIP SEALANT 1/8 X 1 (142"LG)
(1)35	0J97280ST0R	2	PLATE SEISMIC ENCLOSURE
(1)36	0K02550ST0R	2	PLATE SEISMIC ENCLOSURE
(1)37	0K00510ST0R	6	PLATE SEISMIC ENCLOSURE
38	A0000510161	1	AL05 DUCT FRONT CENTER UPPER L2A
	A0000510144	1	AL18 DUCT FRONT CENTER UPPER L2A
	A0000510154	1	AL19 DUCT FRONT CENTER UPPER L2A
39	0E7222	2	RAIN SHIELD,DOOR JAMB
40	G022097	44	WASHER LOCK M6-1/4
41	G022195	6	WASHER LOCK 1/2
42	A0000510158	1	AL05 DUCT FRONT LH UPPER L2A
	A0000510149	1	AL18 DUCT FRONT LH UPPER L2A
	A0000510151	1	AL19 DUCT FRONT LH UPPER L2A

ITEM	PART#	QTY.	DESCRIPTION
43	(4) 0K19910ST03	1	BLOCK OFF RADIATOR BTM 18L
	(3) 0K89560ST03	1	BLOCK OFF RAD SZ T&B G21.9L
	(6) A0000619296	1	ST03 BLOCK OFF RAD SZ T&B D18.1.1L
(1)44	0J16010ST0R	8	BRACKET, ROD GUIDE
45	0H5517	1	DOOR SEAL RUBBER 12GA & 1/8" (92"LG)
46	A0001002329	2	AL05 PANEL DUCT SIDE REAR
	A0001002330	2	AL18 PANEL DUCT SIDE REAR
	A0001002331	2	AL19 PANEL DUCT SIDE REAR
47	(4) 0K19900ST03	2	BLOCK OFF RADIATOR SIDES 18L
	(6)(3) 0K59420ST03	2	BLOCK OFF RADIATOR SIDES 21.9L
48	0J0992	4	T-HANDLE, 2-POINT DBL DOOR
49	A0000510155	2	AL05 OVRHD MODULE END LSA
	A0000510157	2	AL18 OVRHD MODULE END LSA
	A0000510159	2	AL19 OVRHD MODULE END LSA
50	A0001002354	1	AL05 PANEL DUCT SIDE LH FRONT
	A0001002355	1	AL18 PANEL DUCT SIDE LH FRONT
	A0001002356	1	AL19 PANEL DUCT SIDE LH FRONT
51	10000022482	6	AL05 INTAKE OVRHD MODULE BTM L2A
	10000022406	6	AL18 INTAKE OVRHD MODULE BTM L2A
	10000022483	6	AL19 INTAKE OVRHD MODULE BTM L2A
52	A0001045901	1	AL05 CORNER POST LH FNT SEISMIC
	A0000919145	1	AL18 CORNER POST LH FNT SEISMIC
	A0000919146	1	AL19 CORNER POST LH FNT SEISMIC
53	A0001002340	1	AL05 PANEL DUCT SIDE FRONT
	A0001002341	1	AL18 PANEL DUCT SIDE FRONT
	A0001002342	1	AL19 PANEL DUCT SIDE FRONT
(1)54	0K02440AL0R	4	BAFFLE L2A H-GRP
(1)55	0J21600AL0R	4	DOOR RH SOLID
(1)56	0K12170ST0R	2	BRACE SEISMIC
(1)57	A0008117094	1	AL0R REAR CENTER PANEL L2A DUAL CERT
(1)58	0J82360AL0R	1	EXHAUST DUCT INNER PANEL CENTR
(1)59	0J95120ST0R	2	CHANNEL STIFFENER FRONT DUCT RAW
60	0C2454B	243	SCREW HWHT M6-1 X 30 W/MKS
61	0E3257	9	SCREW HWHTF M6-1.0 X 16
(1)62	0K00510ST0R	6	PLATE SEISMIC ENCLOSURE
63	G058653	34	WASHER FLAT M8
64	G097653	6	SCREW HHC M12-1.25 X 30 C8.8
65	A0000919020	2	AL05 CENTER DOOR SUPPORT
	A0000919022	2	AL18 CENTER DOOR SUPPORT
	A0000919023	2	AL19 CENTER DOOR SUPPORT
66	G049808	12	WASHER FLAT M12
(1)67	0K02890ST0R	4	PLATE SEISMIC ENCLOSURE
68	A0000919080	4	AL05 UPPER SIDE BRACE
	A0000919081	4	AL18 UPPER SIDE BRACE
	A0000919083	4	AL19 UPPER SIDE BRACE
69	G049451	4	WASHER FLAT .406ID X 1.62OD
70	A0001045899	1	AL05 CORNER POST RH FNT SEISMIC
	A0000919124	1	AL18 CORNER POST RH FNT SEISMIC
	A0000919125	1	AL19 CORNER POST RH FNT SEISMIC
71	A0001045900	1	AL05 CORNER POST RH REAR SEISMIC
	A0000919133	1	AL18 CORNER POST RH REAR SEISMIC
	A0000919134	1	AL19 CORNER POST RH REAR SEISMIC
(1)72	0K33290ST0R	4	BRACE, SEISMIC H INTAKE
(1)73	0J94270ST0R	1	PANEL DUCT BOTTOM REAR RAW
(1)74	A0008117085	1	AL0R ROOF WLDMNT L2A FRONT DUAL CERT
75	G042909	25	SCREW HHC M8-1.25 X 30 C8.8
76	G042568	3	SCREW HHC M6-1.0 X 20 C8.8
(1)77	0J21390AL0R	4	SIDE BRACE F-GRP
78	A0000510163	1	AL05 DUCT FRONT RH UPPER L2A
	A0000510143	1	AL18 DUCT FRONT RH UPPER L2A
	A0000510156	1	AL19 DUCT FRONT RH UPPER L2A
(1)79	0J82350AL0R	1	EXHAUST DUCT FRONT PANEL CENTR
80	G022473	50	WASHER FLAT 1/4-M6 ZINC
81	G022145	56	WASHER FLAT 5/16-M8 ZINC
82	G052858	17	NUT TOP LOCK FL M8-1.25
(1)83	0J95140ST0R	1	SUPPORT EXHAUST RAW
84	G052857	249	NUT TOP LOCK FL M6-1.0
85	G027529	8	NUT HEX LOCK 1/4-20 NY INS

1
15

H-GROUP COMPONENTS (CONT'D)

RICHARD NEET, P.E.
PE# 86488 CA# 9885

JULY 3, 2025

RICHARD NEET LICENSE No. P.E. 86488 STATE OF FLORIDA PROFESSIONAL ENGINEER

SIGNED:

ENGINEERING EXPRESS
POSTAL ADDRESS:
2234 NORTH FEDERAL HWY #7664
BOCA RATON, FL 33431
ENGINEERINGEXPRESS.COM

GENERAC POWER SYSTEMS
S45W29290 Highway 59
Waukesha, WI 53189
PHONE: (262) 544-4811

GENERAC L2A ENCLOSURE MODELS
A-GROUP THRU H-GROUP ENCLOSURES
FLORIDA STATEWIDE APPROVAL (FSA)

REMARKS	DRWN	CHKD	DATE
INIT ISSUE	EPR	RWN	08/08/23
REV/ PER MD COMMENTS	EPR	RWN	05/08/24
REV. PER MD COMMENTS	EPR	RWN	09/19/24
-	-	-	-
-	-	-	-
-	-	-	-

THIS DOCUMENT IS THE PROPERTY OF ENGINEERING EXPRESS, AND SHALL NOT BE REPRODUCED IN WHOLE OR PART WITHOUT WRITTEN CONSENT OF ENGINEERING EXPRESS. ALTERATIONS, ADDITIONS, OR OTHER MARKINGS TO THIS DOCUMENT ARE NOT PERMITTED AND INVALIDATE OUR CERTIFICATION.

COPYRIGHT ENGINEERING EXPRESS®

23-63327

SCALE: NTS UNLESS NOTED

15 OF 16

7/3/2025 12:29 PM RICHARDNEET C:\Users\richardneetpe\engineering express\production - documents\projects\23-\23-63327 generac l2a a-group thru h-group enclosures\work\2023 fbc\drawings & cad\23-63327c generac perf eval.dwg

ITEM	PART#	QTY.	DESCRIPTION
86	(4) 0K19910ST03	1	BLOCK OFF RADIATOR BTM 18L
	(3) 0K89560ST03	1	BLOCK OFF RAD SZ T&B G21.9L
	(6) A0000619296	1	ST03 BLOCK OFF RAD SZ T&B D18.1.1L
87	G052250	1	TAPE FOAM 1X1 (53"LG)
(1)88	A0008285542	2	ST0R L PLATE DUAL CERT
89	-	-	-
(1)90	0K19000ST0R	1	BRACE LH SEISMIC ENCLOSURE
(1)91	0K19010ST0R	1	BRACE RH SEISMIC ENCLOSURE
(1)92	0K2935AST0R	2	CROSS MEMBER
93	0C3595B	4	ASSY, M8 HINGE LH BOTTOM
94	0C3595C	4	ASSY, M8 HINGE RH BOTTOM
95	10000031792	30	SCREW HWHTF M6-1.0 X 25
96	-	-	-
97	10000029184	REF	KIT INSUL H-GRP L2A – 1" MYLAR
A	0J9798K	1	INSUL REAR H-GRP
B	0J9798J	2	INSUL REAR CNR H-GRP
C	0J9798H	2	INSUL REAR CNR H-GRP
D	0J9798B	4	INSUL H-GRP
E	0H4907BU	4	INSUL F-GRP RH DOOR
F	0H4907BV	4	INSUL F-GRP LH DOOR
G	0J9798A	2	INSUL H-GRP
H	0J9798X	1	NSUL EXHST MNT H-GRP
J	0J9798AD	1	INSUL FNT DUCT H-GRP
K	0H4907BQ	4	INSUL F-GRP SIDE BRACE
L	0J9798C	2	INSUL FNT CNR H-GRP
M	0J9798AB	2	INSUL H-GRP
N	0J9798U	2	INSUL FNT DUCT H-GRP
P	0J9798W	1	INSUL RT FNT DUCT H-GRP
Q	0J9798V	1	INSUL LT FNT DUCT H-GRP
98	10000020722	REF	KIT INSUL H-GRP L2A G21.9L G20 – 1" FOAM BLACK
R	0K0328E	2	INSUL END H-GRP L2A
S	0K0328S	2	INSUL ROOF H-GRP L2A
T	0K0328N	4	INSUL ROOF H-GRP L2A
U	0K0328T	2	INSUL ROOF H-GRP L2A
V	0K0328P	6	INSUL ROOF H-GRP L2A
W	0K0328U	3	INSUL ROOF H-GRP L2A
X	0K0328V	3	INSUL ROOF H-GRP L2A
Y	0K0328W	1	INSUL ROOF H-GRP L2A
Z	0K0328R	6	INSUL ROOF H-GRP L2A
AA	0K0328Q	2	INSUL ROOF H-GRP L2A
AB	0K0328F	4	INSUL END H-GRP L2A
AC	10000004905	2	INSUL INNER SIDE H-GRP L2A
AD	10000004932	2	INSUL INNER ENDS H-GRP L2A
AE	0K0328D	8	INSUL L2A INTAKE BAFFLE
AF	0K0328G	6	INSUL OUTER H-GRP L2A
AG	0K0328C	12	INSUL L2A INTAKE INNNER
AH	0K0328B	8	INSUL L2A INTAKE
AJ	0K0328A	1	INSUL LOWER BACK PANEL
AK	0K0328L	2	INSUL FRONT DUCT H-GRP L2A
AL	0K0328M	1	INSUL FRONT DUCT H-GRP L2A
AM	0K0328K	2	INSUL FRONT DUCT H-GRP L2A
AN	10000003715	2	INSUL END H-GRP L2A
AP	10000023147	2	INSUL INNER SIDE H-GRP L2A
99	10000019915	REF	KIT INSUL H-GRP L2A G21.9L G20 – 1/2" HIGH HEAT
AQ	0K2025B	1	INSUL H-GRP HI TEMP FRT BAFFLE
AR	0K2025A	4	INSUL HIGH TEMP ATTIC BOTTOM
(5)100	G072252	1	GROMMET 1.37 X .06 X 1.00
101	A0000429292	115	NUT M6X1 UCLIP 19.5MM SPRING STEEL
102	0K8641	115	SCREW HHFC M6-1.0 X 20 NYL WA
103	G050190	243	WASHER FLAT .344ID X 1.0OD
(7)104	G066760	1	STRIP SEALANT 1/8 X 1 (37 FT LG)
(7)105	G066760	2	STRIP SEALANT 1/8 X 1 (100" LG)
106	0G3145	16	ROLLER SOLID ROD HANDLE 150MPH
107	0G3146	8	RIVET .182/.188 X 1-5/16
108	A0008095256	2	ST03 PLATE WIND ENCLOSURE D18.1

ITEM	PART#	QTY.	DESCRIPTION
109	0A8258	22	SCREW HHC M8-1.25 X 25 C10.9
110	0C3397	4	SCREW RATCHET BLK NYLON
111	A0008184407	2	ST03 REAR PANEL CONNECTOR PLATE
112	A0008095262	1	ST03 REAR PANEL LOWER SUPPORT PLATE
113	A0008095264	1	ST03 REAR PANEL UPPER SUPPORT PLATE
114	A0008188284	2	ST03 EXHAUST DUCT MID SUPPORT PLATE

1/16 H-GROUP COMPONENTS (CONT'D)

RICHARD NEET, P.E.
PE# 86488 CA# 9885

JULY 3, 2025

RICHARD NEET LICENSE No. P.E. 86488 STATE OF FLORIDA PROFESSIONAL ENGINEER

SIGNED:

FL

ENGINEERING EXPRESS
POSTAL ADDRESS:
2234 NORTH FEDERAL HWY #7664
BOCA RATON, FL 33431
ENGINEERINGEXPRESS.COM

GENERAC POWER SYSTEMS
S45W29290 Highway 59
Waukesha, WI 53189
PHONE: (262) 544-4811

GENERAC L2A ENCLOSURE MODELS
A-GROUP THRU H-GROUP ENCLOSURES
FLORIDA STATEWIDE APPROVAL (FSA)

REMARKS	DRWN	CHKD	DATE
INIT ISSUE	EPR	RWN	08/08/23
REV/ PER MD COMMENTS	EPR	RWN	05/08/24
REV. PER MD COMMENTS	EPR	RWN	09/19/24
-	-	-	-
-	-	-	-

THIS DOCUMENT IS THE PROPERTY OF ENGINEERING EXPRESS, AND SHALL NOT BE REPRODUCED IN WHOLE OR PART WITHOUT WRITTEN CONSENT OF ENGINEERING EXPRESS. ALTERATIONS, ADDITIONS, OR OTHER MARKINGS TO THIS DOCUMENT ARE NOT PERMITTED AND INVALIDATE OUR CERTIFICATION.

COPYRIGHT ENGINEERING EXPRESS®

23-63327

SCALE: NTS UNLESS NOTED

16 OF 16

7/3/2025 12:29 PM RICHARDNEETPE C:\Users\richardneetpe\engineering express\production - documents\projects\23-\23-63327 generac l2a a-group thru h-group enclosures\work\2023 fbc\drawings & cad\23-63327c generac perf eval.dwg