ENGINEERING EXPRESS®

ENGINEERINGEXPRESS.COM | (954) 354-0660
POSTAL ADDRESS:
2234 NORTH FEDERAL HWY #7664
BOCA RATON, FL 33431

Performance Evaluation

Florida Statewide Product Approval (FSA) # FL 47495.5
Engineering Express Project # 25-85765
THIS DOCUMENT CONTAINS (13) PAGES.

EVALUATION SUBJECT: **RAIDER COMMERCIAL UNITS** FL # 47495.5

REPORT HOLDER:
LENNOX INDUSTRIES
2140 LAKE PARK BLVD
RICHARDSON, TX 75080
1-866-953-6609 | LENNOX.COM

LENNOX RAIDER

NOTE: THE GRAPHICAL DEPICTIONS IN THIS EVALUATION ARE FOR ILLUSTRATIVE PURPOSES ONLY AND MAY DIFFER IN APPEARANCE.

SCOPE OF EVALUATION (compliance with the following codes):

THIS IS A STRUCTURAL (WIND) PERFORMANCE EVALUATION ONLY. NO ELECTRICAL OR TEMPERATURE PERFORMANCE RATINGS OR CERTIFICATIONS ARE OFFERED OR IMPLIED HEREIN.
UNDER NO CIRCUMSTANCE DOES THIS PERFORMANCE EVALUATION GUARANTEE, IMPLY, OR STATE PERFORMANCE OF THE UNIT IS MAINTAINED DURING OR AFTER A DESIGN EVENT.

This Performance Evaluation is being issued in accordance with the requirements of the **Florida Building Code Eighth Edition (2023)** per ASCE 7, FBC Building Ch. 16, FBC Building Sections 104.11 & 1522.2, FBC Existing Building Sections 707.1 & 707.2, FBC Mechanical 301.15, FBC Residential M1202.1 & M1301.1, and FS 471.025. The product noted in this performance evaluation has been tested and/or evaluated as summarized herein.

SUBSTANTIATING DATA:
• Product Evaluation Documents
Substantiating documentation has been submitted to provide this performance evaluation and is summarized in the sections below.
• Structural Engineering Calculations
Structural engineering calculations have been prepared which evaluate the product based on comparative and/or rational analysis to qualify the following design criteria:

- Max. allowable (ASD) lateral & uplift wind pressures certified herein
- Max. allowable (ASD) sliding forces, uplift forces, & overturning moments (see Unit Reactions from Wind Guide on last page)
- Tie-down configuration and anchor capacity for concrete, aluminum, and steel host substrates (host by others).
- Unit panel wind pressure connection integrity

Calculation summary is included in this product evaluation and appears herein.

LIMITATIONS & CONDITIONS OF USE:
Use of the product(s) listed herein shall be in strict accordance with this product evaluation as noted herein and manufacturer-provided model specifications. Installation shall conform to the minimum standards stated in the referenced building code(s) in addition to the specifications and limitations stated herein. See herein for complete limitations & conditions of use.

OPTIONS:
This evaluation is valid for the models described herein. The critical unit designs have been determined and used in this evaluation. Any structural changes outside of the design as described herein would void this certification.

UNIT CASING MATERIALS:
Exterior panels and unit base shall be constructed of UTS = 45 ksi min galv. steel (equiv. to ASTM A653 Gr. 33 min. or stronger galv. steel). Exterior panels shall be 20 GA min. thick. Unit base shall be 18 GA min. thick. Exterior panels shall be secured with #14 (0.25") min. Ø, SAE Gr. 2 min. or SS sheet metal screws. Contact the Report Holder for further unit construction information.

TERMINOLOGY:
See herein for definitions of terms and abbreviations used in this evaluation.

STRUCTURAL PERFORMANCE:
Models referenced herein are subject to the following design limitations:

Maximum-Rated ASD Wind Pressures*:
± 122 psf Lateral, 97 psf Uplift

- Required design wind pressures shall be determined according to the guide provided in the Appendix (see last page of this document) or on a site-specific basis in accordance with ASCE 7 and applicable sections of the building code(s) being referenced in accordance with ASD methodology.
- Required design wind pressures shall be less than or equal to the maximum pressures listed herein.
- *Maximum Rated Wind Pressures indicate the maximum pressures that all units listed herein are approved for. Valid for at-grade and rooftop applications. See limitations herein.
- Valid for use inside and outside the High-Velocity Hurricane Zone (HVHZ).
- Site-specific wind analysis may produce alternate limitations provided that the maximum-rated wind pressures stated herein are not exceeded.

VISIT ECALC.IO/LENNOX
FOR MORE INFORMATION AND DEVIATIONS TO THIS EVALUATION OR SCAN THE QR CODE TO THE RIGHT >

Engineer Signature & Seal:

RICHARD NEET LICENSE No. P.E. 86488 STATE OF FLORIDA PROFESSIONAL ENGINEER

Digitally signed by Richard Neet
Date: 2025.04.24 15:26:07 -04'00'

April 24, 2025

Richard Neet, P.E.
ENGINEERING EXPRESS®
FL PE #86488 FLCA #9885

*PRINTED COPIES OF THIS DOCUMENT ARE NOT CONSIDERED SIGNED & SEALED. SIGNATURE MUST BE VERIFIED ON ANY ELECTRONIC COPIES.
***FOR FLORIDA STATEWIDE PRODUCT APPROVALS (FSAs) REGISTERED & APPROVED WITH THE STATE OF FLORIDA:** ORIGINAL, SEALED COPIES OF APPROVED FLORIDA PRODUCT APPROVALS ARE NOT REQUIRED FOR PERMIT. SEE **ECALC.IO/SEAL** TO LEARN MORE.

MODEL INFORMATION

Cabinet Group	Model Number	Unit Dimensions (in)			Allowable Net Weight Range (lb)
		Width	Depth	Height	
A Short	ZCD/ZGD 036, 048	75.875	47.25	36.875	400 - 600
A Tall	ZHD 036, 048, 060, ZCD/ZGD 060, ZGD/ZCD 074	75.875	47.25	44.875	500 - 750
B	ZCD/ZGD 092S, 102S, 120S, 150S ZHD092, 102S, 120S	95.375	60.125	48.875	750 - 1,350

MODEL INFORMATION NOTES

The model information listed herein is based on information provided by the client.

Cabinet Groups (also abbreviated herein as "Cab. Groups", "Cabinets", or "Cab." as needed) are designated by Engineering Express based on the unit cabinet construction and exterior panel layout.

Model number characters beyond those listed in the table do not pertain to this structural certification and may be any combination of numbers, letters, and/or symbols.

Unit dimensions listed herein are unit net/operating dimensions (as opposed to gross/packing/shipping dimensions). Unit dimensions may be abbreviated herein as "W" for "unit width", "D" for "unit depth, and "H" for "unit height".

The allowable weight range shown above for each cabinet group shall be based on the unit net/operating weight (as opposed to gross/ packing/ shipping weights). Unit model net/operating weights shall fall within the allowable weight range for their respective Cabinet Groups.

See Unit Details herein for definitions of unit dimensions, Cabinet Sizes, unit sides as defined in this evaluation, and depictions of exterior unit cabinetry (i.e. panels and doors; related to the Panel Integrity evaluation summarized herein). Unit appearance may vary. Unit construction(s) are per the client's documentation supplied to Engineering Express; see manufacturer documentation for more information on these unit construction(s) and additional views of the unit/component options permitted by this evaluation.

THE REMAINDER OF THE PAGE IS INTENTIONALLY LEFT BLANK.

MODEL INFORMATION: CABINET GROUPS A SHORT & A TALL

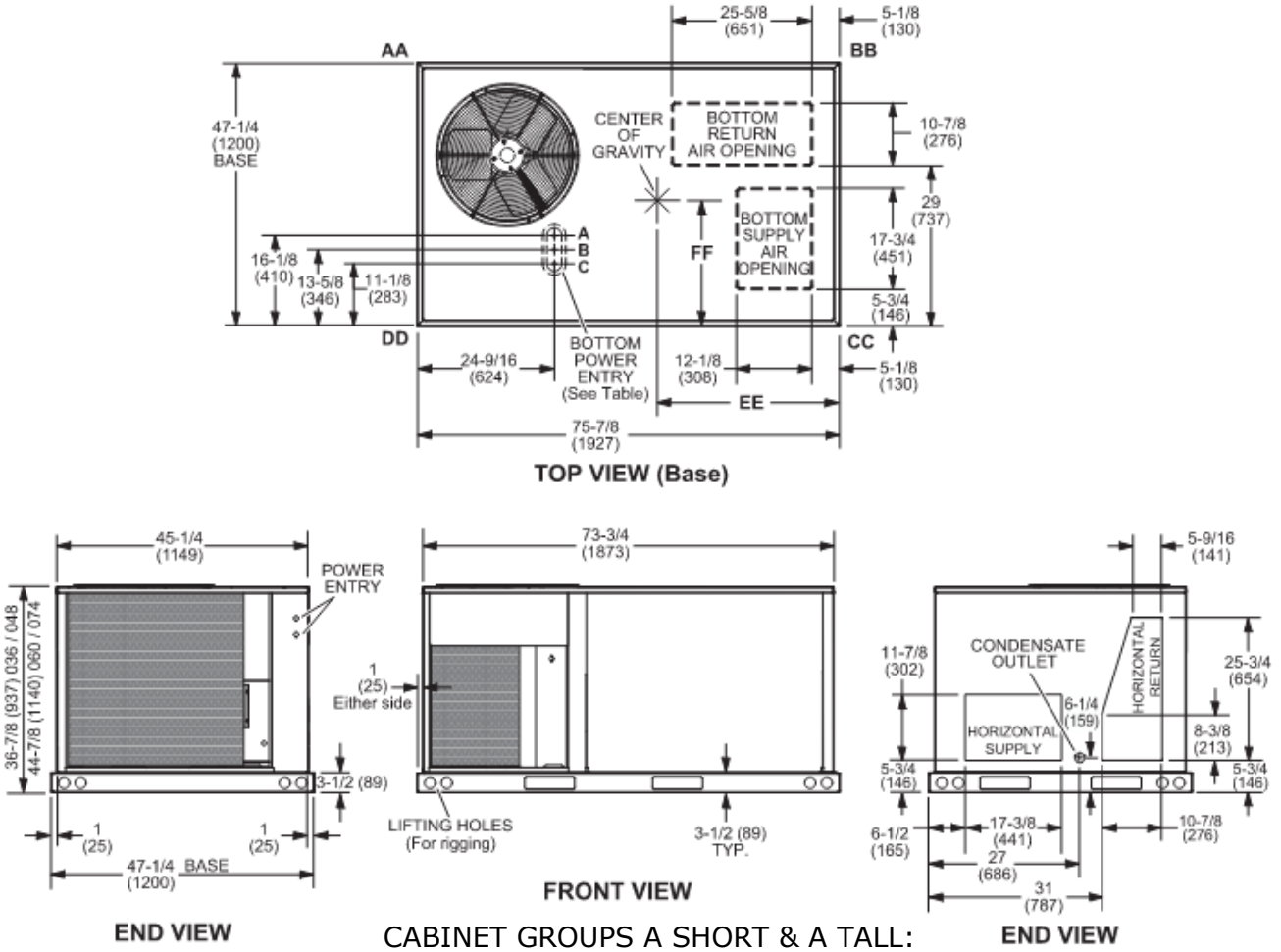

CABINET GROUPS A SHORT & A TALL: UNIT DIMENSIONS & VIEWS

SCALE: NTS MULTIPLE VIEWS

CABINET GROUPS A SHORT & A TALL NOTES

Unit views shown are per manufacturer documentation. Unit views may not show all possible unit configurations; see manufacturer documentation separately. The unit's appearance may vary slightly.

Horizontal supply air and return air openings with ductwork shall have the ductwork and ductwork attachments designed and certified by others. If ductwork is not installed to these openings, cover panels shall be employed for each uncovered opening. Ductwork cover panels shall be constructed of UTS = 45 ksi min galv. steel (equiv. to ASTM A653 Gr. 33 min. or stronger galv. steel) and shall be 20 GA min. thick, typ. Ensure the panel fully covers the opening and extends 2" min. beyond each side of the opening. Each ductwork cover panel shall be secured with (8) #14 (0.25") min. Ø, SAE Gr. 2 min. or SS sheet metal screws (SMS) with 3/4" min. edge distance to edges of cover panel and opening, typ. Provide either (2) SMS per side of cover panel or (4) SMS on opposite two sides (i.e. top and bottom or left and right), typ..

See next page for optional hood accessories permitted by this evaluation. Hood accessories shall be installed per the manufacturer's published installation instructions and shall comply with all requirements stated herein. All ductwork, ductwork attachments, and ductwork air transitions shall be by others.

See next page for the additional screw directive for the optional 18-1/4" projection outdoor air hood (if required; see terms and conditions). Connection calculations were based on information provided by the client and manufacturer-listed specifications. Screw sizes, quantities on panels, and panel characteristics were considered based on client-provided information and additional conservative assumptions. Screw quantities were checked to reinforce unit panels as needed.

"Additional screws" are screws that are required to be installed ***in addition to*** the existing screws present as part of the original unit design(s) submitted to this office, unless noted otherwise (U.N.O.). It is the installing contractor's responsibility to ensure additional screws are installed on the unit as applicable. The purpose of additional screws is to ensure the connection integrity, referred to herein as "panel integrity", is sufficiently validated, such that the panel in question can withstand a high-speed wind gust and not detach or otherwise become flying debris.

Additional screw(s) shall be #14 minimum diameter, SAE Gr. 2 min. or SS SMS. 1000 hours of ASTM B117 with zero red rust is required for all additional screws. Position additional screw(s) as directed. Provide 1" min. spacing between neighboring screws (existing or additional). Validate that each additional screw joins the hood to the unit wall panel.

MODEL INFORMATION: CABINET GROUPS A SHORT & A TALL

OUTDOOR AIR HOOD DETAIL FOR OPTIONAL ECONOMIZER (Downflow Applications)

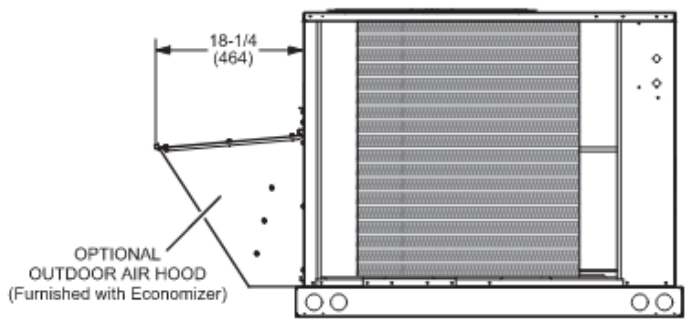

SIDE VIEW

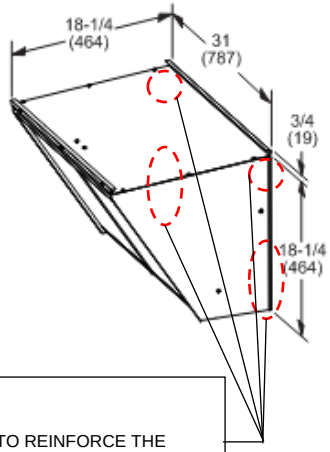

18-1/4" PROJECTION OUTDOOR AIR HOOD: ADDITIONAL SCREW DIRECTIVE:
FOR WIND PRESSURES ± 85 psf LATERAL & 67 psf UPLIFT AND ABOVE:
INSTALLING CONTRACTOR SHALL PROVIDE AN ADDITIONAL (6) #14 SAE GR. 2 MIN. OR SS SMS TO REINFORCE THE HOOD CONNECTION TO THE UNIT. PROVIDE (3) SMS ON LEFT FLANGE AND (3) SMS ON RIGHT FLANGE. ON EACH SIDE: POSITION (2) SMS AT LOWER HALF OF FLANGE (SEE OVAL) AND (1) SMS TOWARD UPPER PART OF FLANGE (SEE CIRCLE).

OUTDOOR AIR DAMPER HOOD DETAIL (Downflow or Horizontal Applications)

MANUAL OUTDOOR AIR HOOD

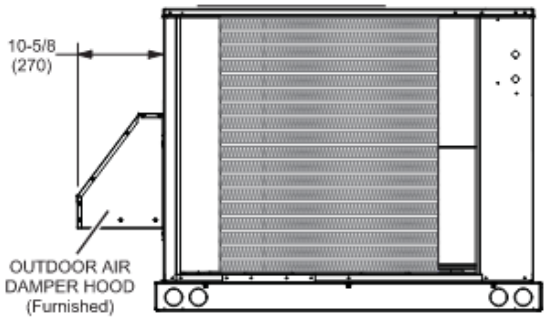

END VIEW

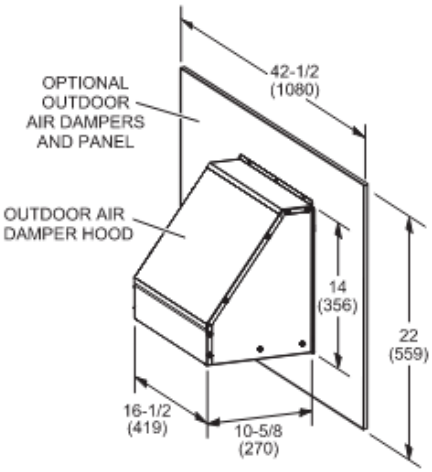

MOTORIZED OUTDOOR AIR HOOD

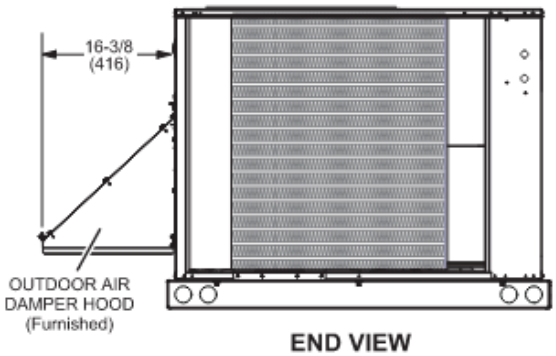

END VIEW

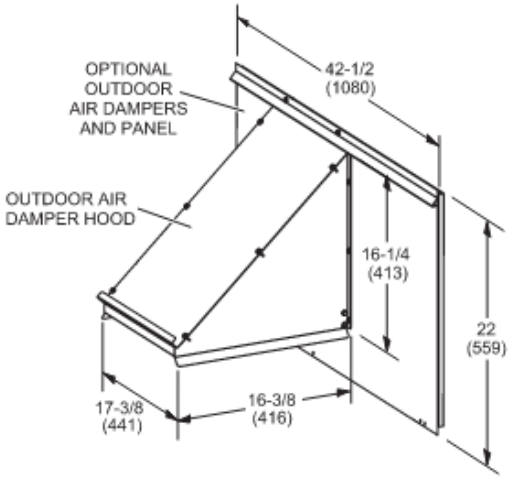

CABINET GROUPS A SHORT & A TALL:
OPTIONAL HOOD ACCESSORIES

SCALE: NTS MULTIPLE VIEWS

MODEL INFORMATION: CABINET GROUP B

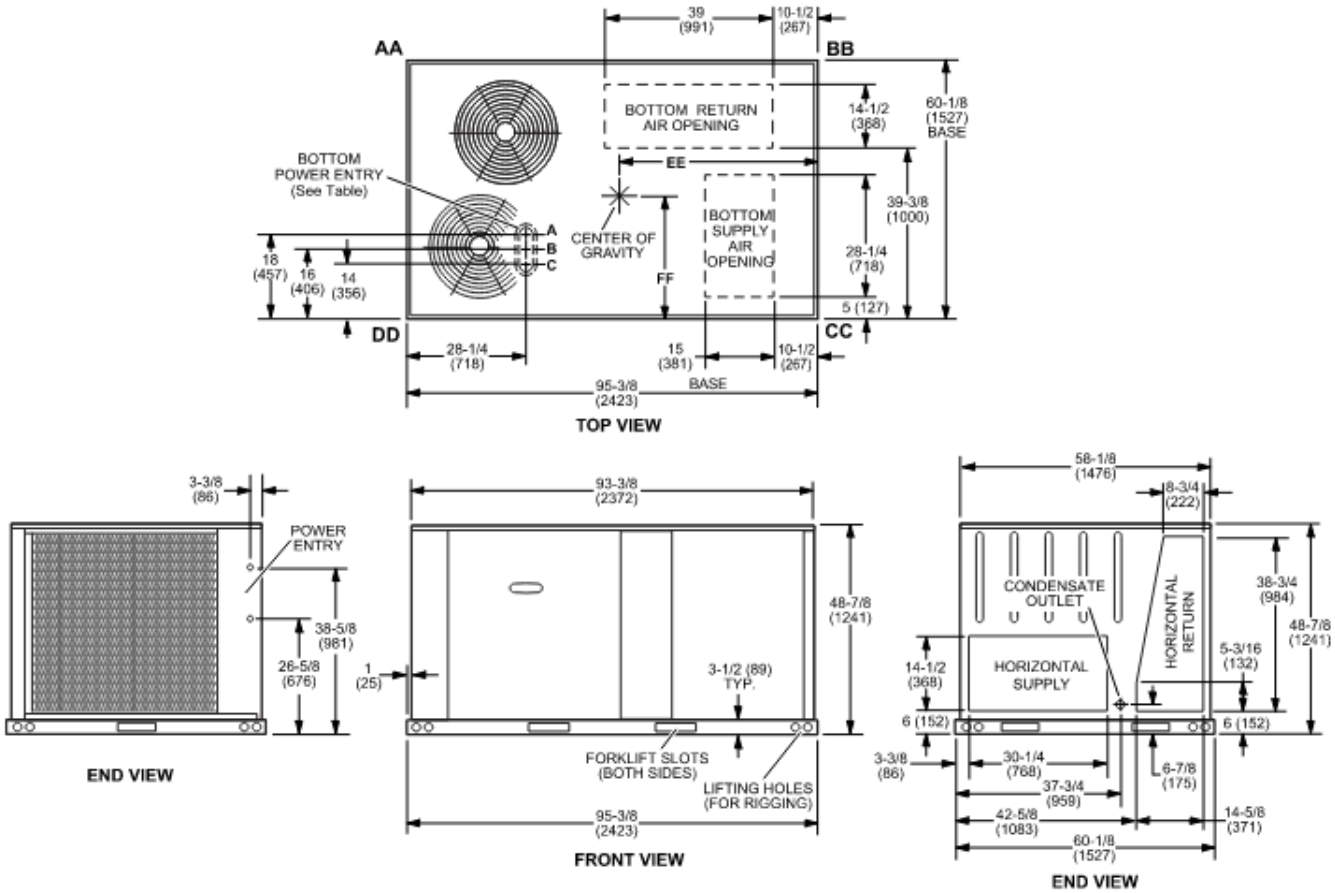

CABINET GROUP B:
UNIT DIMENSIONS & VIEWS

SCALE: NTS MULTIPLE VIEWS

CABINET GROUP B NOTES

Unit views shown are per manufacturer documentation. Unit views may not show all possible unit configurations; see manufacturer documentation separately. The unit's appearance may vary slightly.

Horizontal supply air and return air openings with ductwork shall have the ductwork and ductwork attachments designed and certified by others. If ductwork is not installed to these openings, cover panels shall be employed for each uncovered opening. Ductwork cover panels shall be constructed of UTS = 45 ksi min galv. steel (equiv. to ASTM A653 Gr. 33 min. or stronger galv. steel) and shall be 20 GA min. thick, typ. Ensure the panel fully covers the opening and extends 2" min. beyond each side of the opening. Each ductwork cover panel shall be secured with (8) #14 (0.25") min. Ø, SAE Gr. 2 min. or SS sheet metal screws (SMS) with 3/4" min. edge distance to edges of cover panel and opening, typ. Provide either (2) SMS per side of cover panel or (4) SMS on opposite two sides (i.e. top and bottom or left and right), typ.

See the following pages for optional hood accessories permitted by this evaluation. Hood accessories shall be installed per the manufacturer's published installation instructions and shall comply with all requirements stated herein. All ductwork, ductwork attachments, and ductwork air transitions shall be by others.

See next page for the additional screw directive for the optional 25" projection outdoor air hood (if required; see terms and conditions). Connection calculations were based on information provided by the client and manufacturer-listed specifications. Screw sizes, quantities on panels, and panel characteristics were considered based on client-provided information and additional conservative assumptions. Screw quantities were checked to reinforce unit panels as needed.

"Additional screws" are screws that are required to be installed ***in addition to*** the existing screws present as part of the original unit design(s) submitted to this office, unless noted otherwise (U.N.O.). It is the installing contractor's responsibility to ensure additional screws are installed on the unit as applicable. The purpose of additional screws is to ensure the connection integrity, referred to herein as "panel integrity", is sufficiently validated, such that the panel in question can withstand a high-speed wind gust and not detach or otherwise become flying debris.

Additional screw(s) shall be #14 minimum diameter, SAE Gr. 2 min. or SS SMS. 1000 hours of ASTM B117 with zero red rust is required for all additional screws. Position additional screw(s) as directed. Provide 1" min. spacing between neighboring screws (existing or additional). Validate that each additional screw joins the hood to the unit wall panel.

MODEL INFORMATION: CABINET GROUP B

OUTDOOR AIR HOOD DETAIL FOR OPTIONAL DOWNFLOW ECONOMIZER (Downflow Applications)

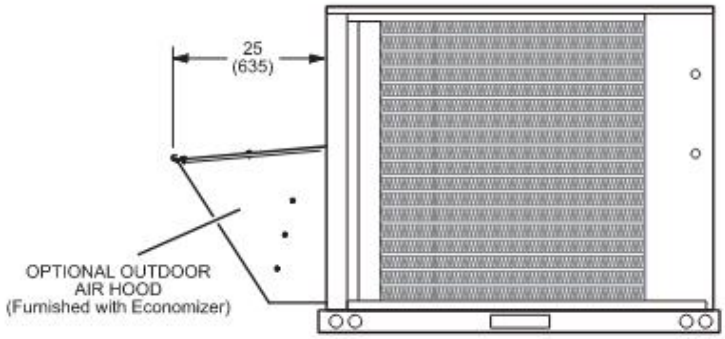

END VIEW

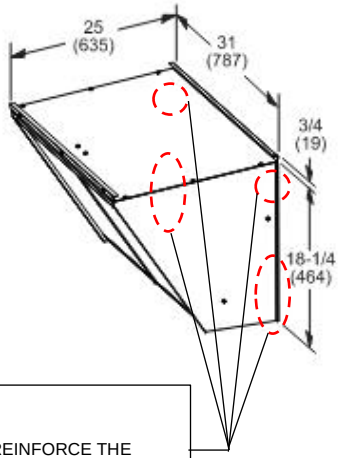

25" PROJECTION OUTDOOR AIR HOOD: ADDITIONAL SCREW DIRECTIVE:
FOR WIND PRESSURES ± 85 psf LATERAL & 67 psf UPLIFT AND ABOVE:
INSTALLING CONTRACTOR SHALL PROVIDE AN ADDITIONAL (6) #14 SAE GR. 2 MIN. OR SS SMS TO REINFORCE THE HOOD CONNECTION TO THE UNIT. PROVIDE (3) SMS ON LEFT FLANGE AND (3) SMS ON RIGHT FLANGE. ON EACH SIDE: POSITION (2) SMS AT LOWER HALF OF FLANGE (SEE OVAL) AND (1) SMS TOWARD UPPER PART OF FLANGE (SEE CIRCLE).

OUTDOOR AIR DAMPER HOOD DETAIL FOR OPTIONAL MANUAL OR MOTORIZED OUTDOOR AIR DAMPERS (Downflow or Horizontal Applications)

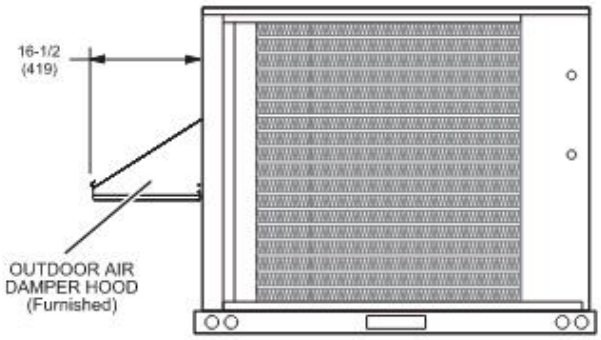

END VIEW

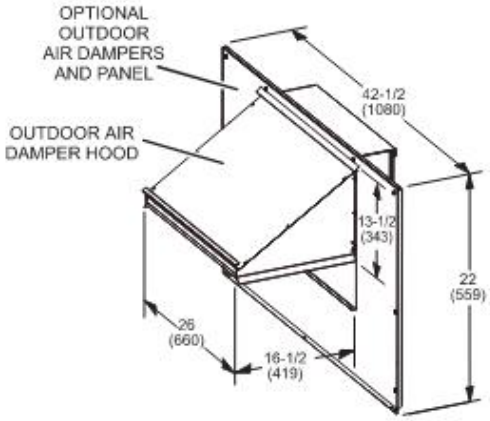

CABINET GROUP B:
OPTIONAL HOOD ACCESSORIES

SCALE: NTS MULTIPLE VIEWS

Note: See additional optional hood accessories on the following page.

MODEL INFORMATION: CABINET GROUP B

OUTDOOR AIR HOOD DETAIL WITH OPTIONAL HORIZONTAL ECONOMIZER AND BAROMETRIC RELIEF DAMPERS (Horizontal Applications)

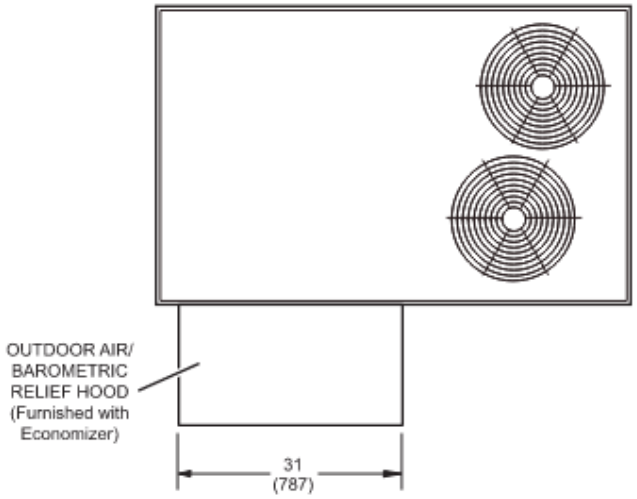

TOP VIEW

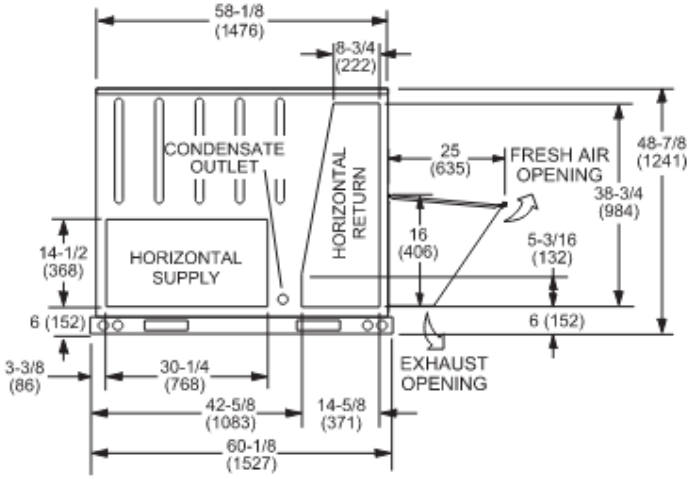

END VIEW

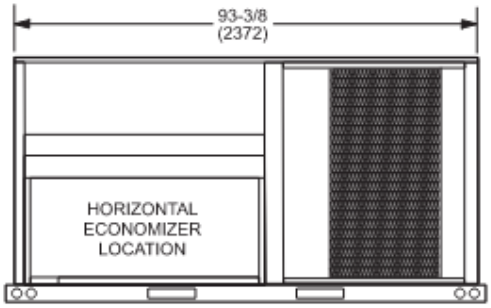

BACK VIEW

CABINET GROUP B:
OPTIONAL HOOD ACCESSORIES

SCALE: NTS MULTIPLE VIEWS

CABINET GROUP B NOTES

As noted prior:

Horizontal supply air and return air openings with ductwork shall have the ductwork and ductwork attachments designed and certified by others. If ductwork is not installed to these openings, cover panels shall be employed for each uncovered opening. Ductwork cover panels shall be constructed of UTS = 45 ksi min galv. steel (equiv. to ASTM A653 Gr. 33 min. or stronger galv. steel) and shall be 20 GA min. thick, typ. Ensure the panel fully covers the opening and extends 2” min. beyond each side of the opening. Each ductwork cover panel shall be secured with (8) #14 (0.25”) min. Ø, SAE Gr. 2 min. or SS sheet metal screws (SMS) with 3/4" min. edge distance to edges of cover panel and opening, typ. Provide either (2) SMS per side of cover panel or (4) SMS on opposite two sides (i.e. top and bottom or left and right), typ..

Hood accessories shall be installed per the manufacturer’s published installation instructions and shall comply with all requirements stated herein. All ductwork, ductwork attachments, and ductwork air transitions shall be by others.

SEE PAGES 5 AND 6 HEREIN FOR REQUIRED ADDITIONAL SCREWS FOR THE 25” PROJECTION OUTDOOR AIR HOOD.

DESIGN & GENERAL NOTES:

The following notes are applicable for all unit installations unless noted otherwise (U.N.O.):

1. "Host Concrete" where used herein: host concrete shall have f'c = 3,000 psi min. compressive strength and shall be regular-weight, uncracked concrete. Host concrete shall be by others.
2. "Host Curb" where used herein: Host Curb shall be 18 GA min. thick, UTS = 45 ksi min. (equivalent to ASTM A653 Gr 33 or stronger) galv. steel, typ. Host Curb shall be by others, typ. Performance of the existing Curb as a structural member to support the unit assembly shall be per separate certification. Host Curb shall be 48" max. tall.
3. Permit holder shall verify the adequacy of the existing structure to withstand superimposed loads.
4. "Mechanical Unit" or "Unit" where used herein refers to a unit included in and in compliance with the "Model Information" section prior. See prior for required specifications and approved unit sizes.
5. "Tie-Down Clip" or "Clip" where used herein: Each clip shall be 2" min. wide x 0.072" min. thick, UTS = 45 ksi min. (equivalent to ASTM A653 Gr. 33 or stronger) galv. steel, typ. Ensure clip sits flush on host structure and flush against the unit. Clip-to-unit screws shall be positioned as (1) screw per clip slot, typ. (If no slots on clip: provide 3/4" min. spacing between clip-to-unit SMS). Ensure all screws fully engage with the unit. Clip-to-host anchor shall be placed at the center of the tie-down clip leg, such that 3/4" min. edge distance is provided in all directions, typ. See herein for clip-to-unit screw and clip-to-host anchor quantities and specifications.
6. "Tie-Down Strap" or "Strap" where used herein: Each strap shall be 2" min. wide x 22 GA min. thick, UTS = 45 ksi min. (equivalent to ASTM A653 Gr. 33 or stronger) galv. steel, typ. Tie-down strap lengths shall be determined by the installing contractor. Ensure strap lengths are such that the strap is neither excessively taut nor excessively slack once installed. A secure fit should be achieved. Straps shall be positioned at 6" minimum from any unit edge. Provide 1/2" min. spacing between edges of adjacent straps, typ. Stagger strap screws as needed to achieve the required minimum spacing and edge distances. Straps may be removed for maintenance purposes but shall be replaced per the attachment directives herein following maintenance. **Tie-down straps must be in place before any named storm or similar high-wind event.**

   Note: if desired, (2) 1" wide straps may be used in place of (1) 2" min. wide strap. The (2) 1" wide straps shall be 22 GA min. thick, UTS = 45 ksi min. (equivalent to ASTM A653 Gr. 33 or stronger) galv. steel, typ. The 1" wide strap ends shall be secured with half as many screws as the 2" wide strap end attachments (i.e. (2) #14 SMS per 1" wide strap end if the 2" wide strap ends are secured with (4) #14 SMS). All other strap specifications noted herein shall apply.

   (This note is intended to provide installing contractors with the option to use 1" wide straps in case the 1" wide straps are easier to source. This alternate tie-down method is intended to be equivalent to the 2" wide strap method. Contact Engineering Express if additional clarity is needed).

7. "Sheet Metal Screws" or "SMS" where used herein: screws shall be SAE Gr. 2 min. or SS self-drilling screws with washers, typ. Provide (5) pitches minimum past the thread plane, typ.
8. "Thru-Bolt" if used herein: bolt shall be SAE Gr. 5 min. with 1" min. OD fender washers and ID sized for the bolt shank diameter at the top and bottom of the connection (under the bolt head and above the locking nut), and SAE Gr. 5 min. locking nut at the underside of the connection, typ. See the thru-bolt diagram on the second-to-last page of this report.
9. For all fasteners specified herein: provide 3x diameter minimum spacing and 1.5x diameter minimum edge distance for all steel-to-steel and steel-to-aluminum connections, typ. Provide 2.5x diameter minimum spacing and 1.5x diameter minimum edge distance for all aluminum-to-aluminum connections.
10. Refer to fastener manufacturer's published data sheets and recommendations for fastener installation instructions. Fasteners shall be cadmium-plated or otherwise corrosion-resistant material and shall comply with "Specifications for Aluminum Structures" Section J.3.7.2 by the Aluminum Association Inc., and any applicable federal, state, and/or local codes.
11. Alternate/equivalent anchors may be used in place of the listed anchors herein so long as all of the below conditions are satisfied and are subject to the approval of the Authority Having Jurisdiction:
    i. The equivalent anchor is demonstrated to have allowable (ASD) tension and shear capacities equal to or greater than the listed anchor's allowable tension and shear capacities as verified by a Design Professional.
    ii. All necessary reductions in capacity for edge distance, spacing, and other requirements as noted by the anchor manufacturer are considered in determining the equivalent anchor's tension and shear capacities.
    iii. The alternate anchor is of equal or greater diameter than the listed anchor and is provided with the same minimum edge distance, spacing, and any other specifications as are required for the listed anchor; AND
    iv. Anchor equivalents shall follow all requirements specified in this report in addition to the governing code(s) and allowable stress design (ASD) methodology.

    Contact Engineering Express to add additional anchoring options to this report, or to certify an anchor option for special site-specific conditions needed for a particular site installation.
12. The contractor is responsible for insulating all members from dissimilar materials to prevent electrolysis.
13. Water-tightness of the existing host substrate/structure shall be the full responsibility of the installing contractor. The contractor shall ensure that any removed or altered waterproofing membrane is restored after fabrication and installation of the structure evaluated herein. This engineer shall not be responsible for any waterproofing or leakage issues that may occur as water-tightness shall be the full responsibility of the installing contractor.

CONTINUED NEXT PAGE

DESIGN & GENERAL NOTES, CONTINUED:

14. Large and small missile impact are not covered in this certification and shall be approved through a separate submittal if required.
15. Interior mechanisms and/or electrical circuitry are outside the scope of this performance evaluation. Electrical ground, when required, to be designed & installed by others. All mechanical specifications (clear space, tonnage, etc.) shall be as per manufacturer recommendations and are the express responsibility of the contractor.
16. The products and/or systems detailed herein are generic and do not provide information for a specific site. For site conditions different from the conditions listed herein, a licensed engineer or registered architect shall provide site-specific documents for use in conjunction with this evaluation report. Contact Engineering Express for site scenarios outside the bounds of this evaluation.
17. Engineering Express shall be notified and given an opportunity to reevaluate our work upon discovery of any inaccurate information prior to modification of existing field conditions and fabrication and installation of materials.
18. Alterations, additions, or other markings to this document are not permitted and invalidate this certification. Dimensions are shown to illustrate design forces and other design criteria. They may vary slightly but must remain within the limitations specified herein. Work shall be field-verified by others.
19. Engineer seal affixed hereto validates the structural design as shown only. Use of this specification by contractor, et. al. indemnifies and saves harmless this engineer for all costs and damages including legal fees and appellate fees resulting from material fabrication, system erection, and construction practices beyond that which is called for by local, state, and federal codes and from deviations of this plan.

PANEL INTEGRITY SUMMARY

No additional screws are required for the base unit exterior panels up to the maximum-rated ASD wind pressures stated herein. See pages prior for required additional screws on the optional, larger projection outdoor air hoods as directed.

Panel integrity calculations were based on information provided by the client and manufacturer-listed specifications. Calculations are valid for all unit models listed herein, and specifications herein apply to all unit models listed herein (see “Model Information” section). All exterior panels were considered in the calculations and are covered by this certification. Panels were assigned various porosities depending on the ratio of louver/aperture area to total panel area, for the purposes of calculating the acting wind force on each panel. Screw sizes, quantities on panels, and panel characteristics were considered based on client-provided information and additional conservative assumptions. Screw quantities were checked to reinforce unit panels as needed.

THE REMAINDER OF THE PAGE IS INTENTIONALLY LEFT BLANK.

TIE-DOWN DIRECTIVE: GROUND MOUNT TO CONCRETE

(FOR ASD WIND PRESSURES UP TO ± 54 PSF LATERAL & 0 PSF UPLIFT)

Cabinet Group	Qty. of Tie-Down Clips Required		
	Qty. Per Unit Long Side	Qty. Per Unit Short Side	Qty. In Total
A Short	2	0	4
A Tall	2	0	4
B	3	0	6

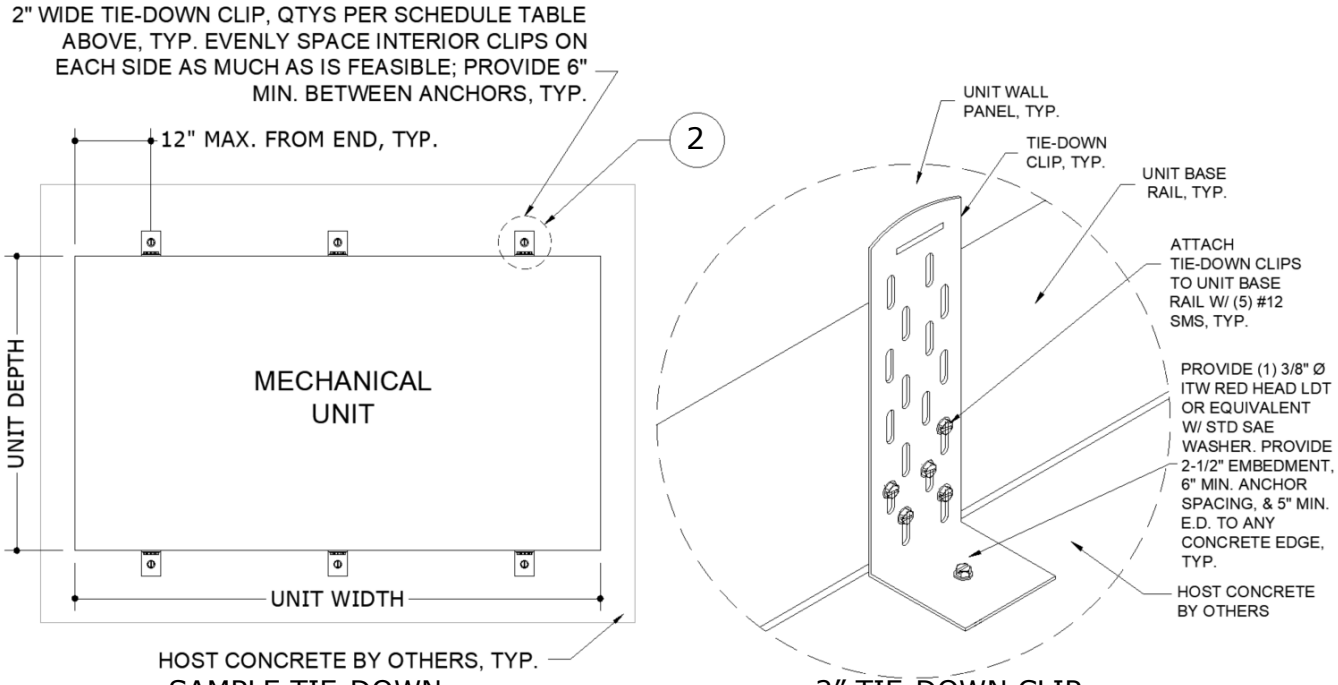

1 SAMPLE TIE-DOWN LAYOUT TO CONCRETE, TYP.
SCALE: NTS PLAN VIEW

2 2" TIE-DOWN CLIP ATTACHMENT, TYP.
SCALE: NTS ISOMETRIC VIEW

TIE-DOWN DIRECTIVE (GROUND MOUNT TO CONCRETE), DETAIL 1-2 NOTES

The units depicted in the Details on this page are for illustrative purposes only. Units may vary in appearance. The tie-down system may not be depicted in full. The sample tie-down layouts shown herein are for illustrative purposes only. Tie-down locations may vary per the specifications herein. Host structure shape may vary.

Detail 1 Note: Tie-down clip quantity shown is for illustrative purposes only and varies per the Tie-Down Clip Schedule table shown above. Position tie-down clips against solid portions of the unit base rail (avoiding lifting eyes and forklift slots), and distribute interior tie-down clips as evenly spaced along the unit side as much as is feasible (as directed above).

ROOFTOP MOUNT TO CURB

Cabinet Group	Max. ASD Wind Pressures Lateral (Uplift)	Qty. of Tie-Down Straps Required		
		Qty. Per Unit Long Side	Qty. Per Unit Short Side	Qty. In Total
A Short	± 80 psf (64 psf)	3	2	10
	± 122 psf (97 psf)	4	2	12
A Tall	± 80 psf (64 psf)	3	2	10
	± 122 psf (97 psf)	4	2	12
B	± 80 psf (64 psf)	4	2	12
	± 122 psf (97 psf)	6	3	18

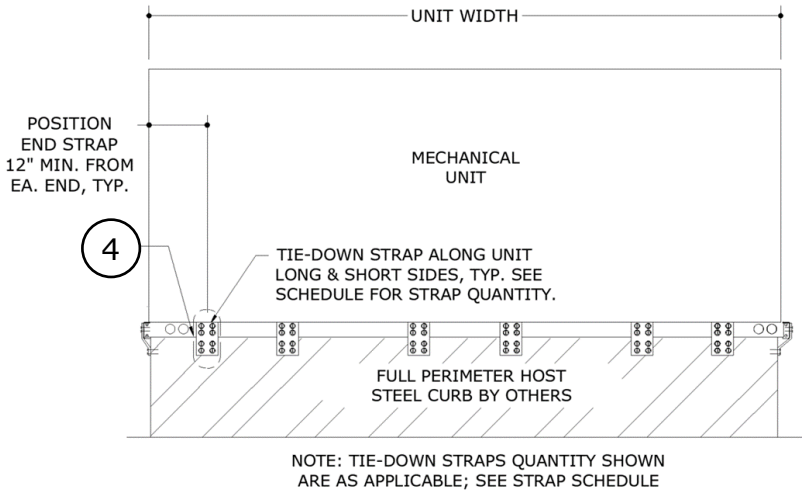

3 SAMPLE TIE-DOWN LAYOUT UNIT ATTACHMENT TO CURB
SCALE: NTS ELEVATION VIEW

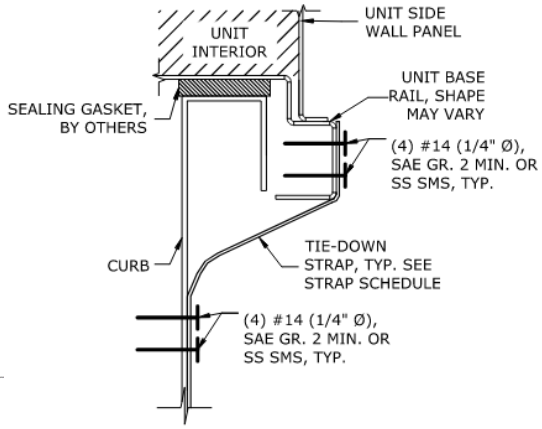

4 TIE-DOWN STRAP ATTACHMENTS, TYP.
SCALE: NTS ELEVATION VIEW

TIE-DOWN DIRECTIVE (ROOFTOP MOUNT TO CURB), DETAIL 3-4 NOTES

The units depicted in the Details on this page are for illustrative purposes only. Units may vary in appearance. Tie-down system may not be depicted in full. The sample tie-down layouts shown herein are for illustrative purposes only. Tie-down locations may vary per the specifications herein. Host structure shape may vary. Base rail shape may vary; see manufacturer documentation for actual base rail shapes.

Position tie-down straps against solid portions of the unit base rail (avoiding lifting eyes and forklift slots), and distribute interior tie-down straps as evenly spaced along the unit side as much is feasible.

TERMINOLOGY, CONTINUED

The following abbreviations may appear in this report: "Addtl." for "additional", "AHJ" for "Authority Having Jurisdiction", "alum" for "aluminum", "ASCE" for "American Society of Civil Engineers", "ASD" for "Allowable Stress Design", "ASTM" for "American Society for Testing and Materials", "EA." for "each", "E.D." for edge distance", "EDDS" for "extra deep drawing steel", "e.g." for "*exempli gratia*" or "for example", "equiv." for "equivalent", "FBC" for "Florida Building Code", "FEA" for "Finite Element Analysis", "FLCA" for "Florida Certificate of Authorization", "FS" for "Florida Statutes", "Fu" for "ultimate tensile strength" or "ultimate tensile stress", "Fy" for "yield strength" or "yield stress" "GA" for "gauge", "GR." or "Gr." for "grade", "HVAC" for "heating, ventilation, and air conditioning", "HVHZ" for "High-Velocity Hurricane Zone", "i.e. " for "*id est*" or "in other words", "in" for "inch", "lb" for "pound (force)", "max." for "maximum", "min." for "minimum", "mm" for "millimeter", "NTS" for "not to scale", "O.C. " for "on center", "OD" for "outer diameter", "pcf" for "pounds (force) per cubic foot", "PE" for "Professional Engineer", "qty" for "quantity", "SAE" for "Society of Automotive Engineering", "SMS" for "sheet metal screws", "SS" for "stainless steel", "TER" for "Technical Evaluation Report", "typ." for "typical", "ult" for "ultimate loads", "U.N.O." for "unless noted otherwise", "UTS" for "ultimate tensile strength" or "ultimate tensile stress", "WLL" for "working load limit", "w/o" for "without", "YS" for "yield strength" or "yield stress", "#" for "number", "&" for "and", and "Ø" for "diameter". Please visit ecalc.io/glossary for additional abbreviation clarifications.

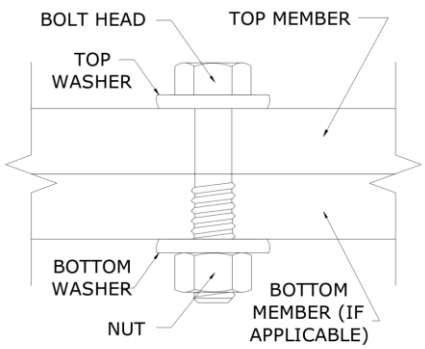

SAMPLE THRU-BOLT
SCALE: NTS SECTION VIEW

Note: The term "Thru-Bolt" or through bolt, if used herein, refers to a bolt passing through the member(s) in contact and is fastened by a nut at the end opposite the screw head. Nut shall be equivalent to or exceed the strength of the bolt U.N.O. Nut shall be sized to accommodate the same nominal diameter as the bolt U.N.O. See diagram above-right for a sample thru-bolt configuration.

Note: For instances herein which list material specifications as *"[material type] or stronger":*
U.N.O. herein, the term "stronger" refers to a material with a UTS value equal to or greater than the UTS value of the stated material type. Consult appropriate literature for established material UTS values.

Note: Equivalent steel gauge thicknesses as used in this evaluation, U.N.O., are as follows:
22 GA (.030"), 20 GA (.036"), 18 GA (.048"), 16 GA (.060"), 14 GA (.075"), 12 GA (.098").

LIMITATIONS & CONDITIONS OF USE, CONTINUED

Use of this product shall be in strict accordance with this product evaluation as noted herein. The supporting host structure shall be designed to resist all superimposed loads as determined by others on a site-specific basis as may be required by the authority having jurisdiction. Host structure conditions which are not accounted for in this product's respective anchor schedule shall be designed for on a site-specific basis by a registered Professional Engineer. No evaluation is offered for the host supporting structure by use of this document. Adjustment factors noted herein and the applicable building codes must be considered, where applicable. Product components shall be of the material(s) specified in the manufacturer-provided product specifications. All supporting components which are permanently installed shall be protected against corrosion, contamination, and other such damage at all times. All fasteners and anchors shall be installed in accordance with the applicable provisions specified herein in addition to the anchor/fastener manufacturers' published installation instructions. Fasteners must penetrate the supporting members such that the full length of the threaded portion is embedded within the main member. This evaluation does not offer any evaluation to meet large missile impact debris requirements under any circumstances.

All of the wind-resisting exterior panels (with accompanying retrofits) individually meet or exceed their capacity to resist the design wind loads as stated in the calculations as required by the codes and standards stated herein. Due to the indeterminate nature of these units, distortion, deflection, and material deformation cannot be accurately evaluated, but with the diaphragm action of external components and internal stiffeners, the base unit (with accompanying retrofits stated herein as applicable) has the capacity to withstand the design wind loads without detaching from the unit and becoming flying debris.

Survivability: This performance evaluation is valid for a newly installed unit and do not include certification of the product beyond a design event or if impacted by any debris. Inspections shall be implemented annually by the end user and after every named storm. All fasteners and cabinet components are to be verified, and all damaged, loose, corroded and/or broken fasteners and cabinet components shall be replaced to ensure structural integrity against hurricane wind forces. Contact this office for any reevaluation needs or as designated by the Authority Having Jurisdiction.

Durability: Components or component assemblies shall not deteriorate, crack, fail, or lose functionality due to galvanic corrosion or weathering. All supporting components which are permanently installed shall be protected against corrosion, contamination, and other such damage at all times. Each component or component assembly shall be supported and oriented in its intended installation position. All exposed plastic components shall be certified to resist sunlight exposure as specified by ASTM B117, or ASTM G155 in Broward or Miami Dade counties.

Extent of Certification: Certification pertains to the overall structural integrity of the unit components listed within the evaluation as required by code, subject to the limitations and criteria stated herein. Operability during or after a design event is not included in this certification. Water infiltration is outside the bounds of this certification. No other certifications are intended other than as described herein. This evaluation alone does not offer any evaluation for large missile impact debris or cyclic wind requirements unless specifically stated herein.

Proj. #	Remarks	By	Checked	Date	Proj. #	Remarks	By	Checked	Date
25-85765	FSA Initial Issue	EPR	EPR	04/22/25					

APPENDIX A: DESIGN WIND PRESSURE GUIDE

Max. Ult. Wind Speed (V_{ult})	Max. MRH (Roof Height)	Exposure Category	Required Design Wind Pressures (ASD)	
			Lateral Pressure	Uplift Pressure
140 mph	At-Grade (0 ft)	C	± 26 psf	0* psf
		D	± 31 psf	0* psf
	100 ft	C	± 63 psf	50 psf
		D	± 71 psf	56 psf
	200 ft	C	± 72 psf	57 psf
		D	± 80 psf	63 psf
175 mph	At-Grade (0 ft)	C	± 40 psf	0* psf
		D	± 49 psf	0* psf
	100 ft	C	± 98 psf	77 psf
		D	± 111 psf	87 psf
	200 ft	C	± 113 psf	89 psf
		~~D~~	~~± 124 psf~~	~~98 psf~~
186 mph	At-Grade (0 ft)	C	± 46 psf	0* psf
		D	± 54 psf	0* psf
	100 ft	C	± 111 psf	87 psf
		~~D~~	~~± 125 psf~~	~~99 psf~~
	~~200 ft~~	~~C~~	~~± 127 psf~~	~~100 psf~~
		~~D~~	~~± 140 psf~~	~~111 psf~~

~~100 psf~~ Note: Any table values with the format shown left, if present, indicate design wind pressures and site conditions that are **not approved for use** by this evaluation. Seek additional engineering or contact this firm for design solutions.

DIRECTIVE: This design pressure guide is for reference only and shall be approved for use by the Authority Having Jurisdiction (AHJ). If the design pressures listed in this guide are not used, required design pressures shall be calculated separately. For site-specific scenarios classified as Exposure Category B, the required design pressures stated for Exposure Category C in the above guide shall be used or design pressures shall be calculated separately. For heights and parameters beyond the parameters listed in this guide, visit our Online Calculator via the website link (https://ecalc.io/forces) or QR Code below, or obtain calculations separately by others.

The required ASD design pressures listed in this guide were calculated per the table's listed corresponding site conditions. The project design professional or permitting contractor shall verify that the site-specific conditions are equal to or less than the approved design parameters listed in the guide. Per the note below table: any values shown as "~~XX psf~~", indicate wind pressures and corresponding site conditions that are **not valid for use** with this evaluation (exceeds the max. rated pressures).

*Note: Per the codes and standards referenced herein, uplift is not required for mechanical equipment at-grade. If uplift at-grade is required by the AHJ, contact this firm for a site-specific evaluation.

At-Grade (0 ft MRH) Required Design Pressures:

- ASCE 7 "Design Wind Loads: Other Structures"
- Structure Shape = Square, flat terrain
- Height of structure (unit + stand or curb, if used) = 6 ft max.
- Width of unit = 1 ft min., Depth of unit = 11 in min.

Rooftop (>15 ft MRH) Required Design Pressures:

- ASCE 7 "Design Wind Loads: Other Structures: Rooftop Structures and Equipment for Buildings"
- Structure Shape = Square, flat terrain
- z = up to 7 ft, where z = height of stand or curb + ½ unit height
- Lateral GC_f = 1.90; Uplift GC_f = 1.50

VISIT ECALC.IO/FORCES

FOR DESIGN AID CALCULATORS AND RESOURCES RELATED TO THIS EVALUATION & GUIDES HEREIN, OR SCAN THE QR CODE RIGHT >

UNIT REACTIONS FROM WIND GUIDE

DIRECTIVE: This guide is intended for use by a design professional. Design parameters shall abide all specifications and limitations stated in this evaluation. Design professional shall consider all forces, including seismic and snow loads, per the governing building code. Unit reactions obtained from this guide shall be verified by a registered Professional Engineer. Reactions are applicable for unit-to-host connections only. Sample calculations are provided below.

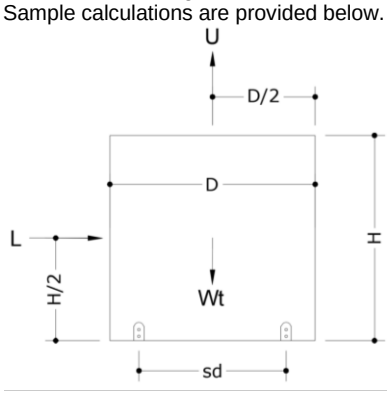

Design Parameters:

- Lateral Wind Pressure, P_lat
- Unit Height, H
- Unit Width, W
- Support Spacing across Depth, sd
- Uplift Wind Pressure, P_up
- Unit Depth, D
- Unit Weight, Wt
- Support Spacing across Width, sw

Unit Reaction Equations:

Long Side (Width x Height):

- Sliding Force, L = P_lat x W x H
- Uplift Force, U = P_up x W x D
- Total Tension per Long Side =
(L x H/2 + U x sd/2 – Wt x 0.6 x sd/2) / sd

Short Side (Depth x Height):

- Sliding Force, L = P_lat x D x H
- Uplift Force, U = P_up x W x D
- Total Tension per Short Side =
(L x H/2 + U x sw/2 – Wt x 0.6 x sw/2) / sw

Example: A (48" W x 36" D x 42" H), 250 lb net weight unit at wind pressures of 120 psf lateral and 95 psf uplift, on a 24" wide roof stand, shall have the following unit reactions:

Long Side (Width x Height):

1. Sliding Force, L = P_lat x W x H
   = (120 psf) x (48 in) x (42 in) x (1 in^2 / 144 ft^2) = **1680 lb**
2. Uplift Force, U = P_up x W x D
   = (95 psf) x (48 in) x (36 in) x (1 in^2 / 144 ft^2) **= 1140 lb**
3. Total Tension per Long Side =
   = (L x H/2 + U x sd/2 – Wt x 0.6 x sd/2) / sd
   = ((1680 lb x 42/2 in) + (1140 lb x 24/2 in) –
   (250 lb x 0.6 x 24/2 in)) / 24 in **= 1965 lb**

Short Side (Depth x Height):

1. Sliding Force, L = P_lat x D x H
   = (120 psf) x (36 in) x (42 in) x (1 in^2 / 144 ft^2) **= 1260 lb**
2. Uplift Force, U = P_up x W x D
   = (95 psf) x (48 in) x (36 in) x (1 in^2 / 144 ft^2) **= 1140 lb**
3. Total Tension per Short Side =
   = (L x H/2 + U x sw/2 – Wt x 0.6 x sw/2) / sw
   = ((1260 lb x 42/2 in) + (1140 lb x 48/2 in) –
   (250 lb x 0.6 x 48/2 in)) / 48 in **= 1046 lb**

IN ALL CONDITIONS IT IS THE RESPONSIBILITY OF THE PERMIT HOLDER TO ENSURE THE HOST STRUCTURE IS CAPABLE OF WITHSTANDING THE RATED GRAVITY, LATERAL, AND UPLIFT FORCES BY SITE-SPECIFIC DESIGN. NO WARRANTY OF ANY KIND, EXPRESSED OR IMPLIED, IS OFFERED BY ENGINEERING EXPRESS AS TO THE INTEGRITY OF THE HOST STRUCTURE TO CARRY DESIGN FORCE LOADS INCURRED BY THIS UNIT.