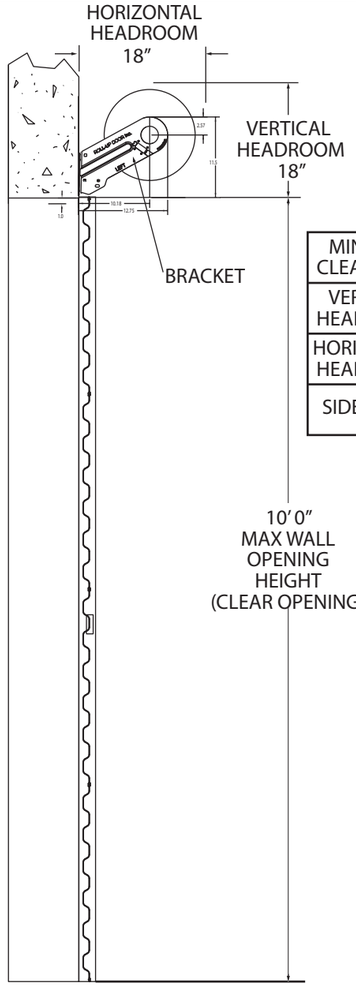

SIDE VIEW

MINIMUM HEADROOM CLEARANCE DIMENSIONS	
VERTICAL HEADROOM	18"
HORIZONTAL HEADROOM	18"
SIDE ROOM	3 1/2"

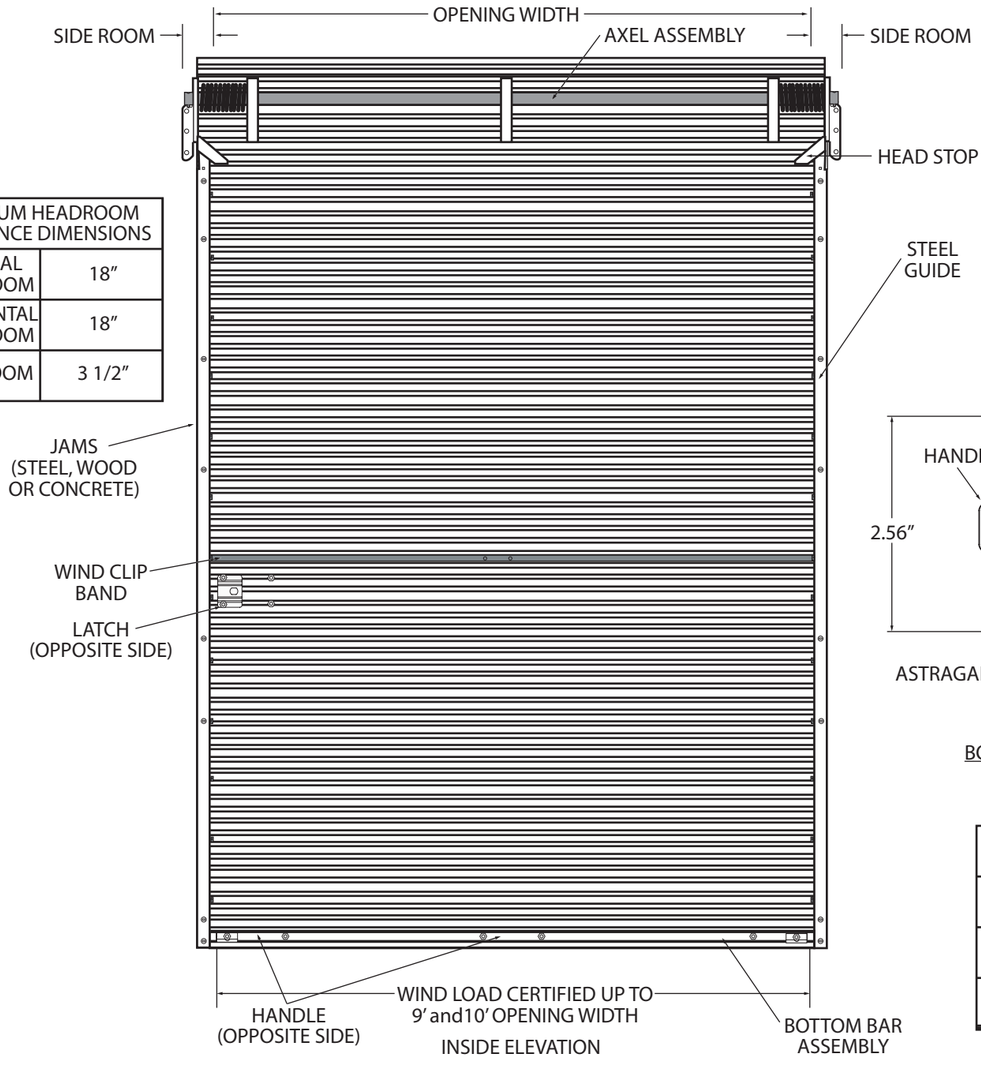

INSIDE ELEVATION

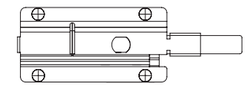

OUTSIDE DOOR VIEW
MINI LATCH

INSIDE DOOR VIEW
MINI LATCH
BACKER PLATE

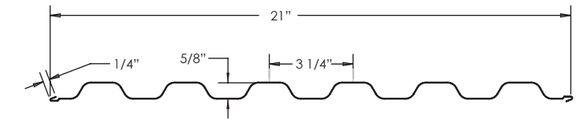

BAKED POLYESTER
WEATHERXL PAINT

TYPICAL PANEL (26 GA) DETAIL

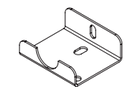

MINI CATCH

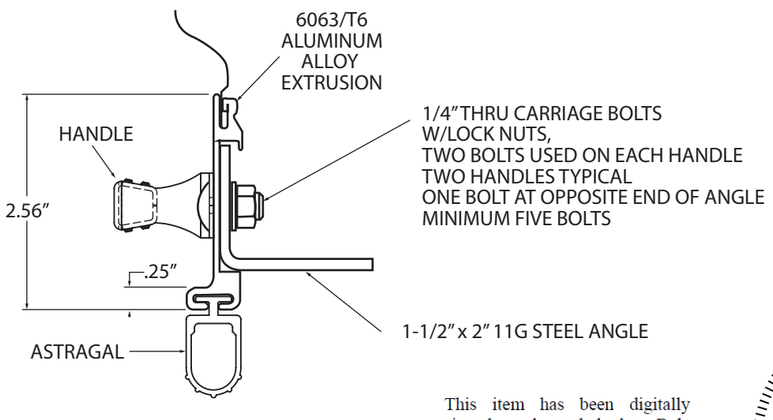

BOTTOM BAR ASSEMBLY
DETAIL

DOOR SCHEDULE	
DOOR WIDTH	DESIGN PRESSURE(PSF)
10'	+29.6
	-32
9'	+34
	-37.3

This item has been digitally signed and sealed by Bala Sockalingam, PE, on the date indicated.

Printed copies of this document are not considered signed and sealed and this signature must be verified on any electronic copies.

BALA SOCKALINGAM LICENSE No. 62240 STATE OF FLORIDA PROFESSIONAL ENGINEER

2025.04.04
22:34:35 +08'00'

WIND CLIPS- Starting in 1st valley above bottom bar, wind clips are installed in valleys 1,4,7,10,16,19, and 22. Valley 13 receives metal banding with wind clip on each end resulting in minimum of 2 wind clips per sheet on each side and 1 band (door width x 1" x .115" x) with a clip on each end. With additional sheets, 2 more clips will be added per side continuing the same patern. (SEE METAL WIND CLIP 1 DRAWING)

UNLESS OTHERWISE SPECIFIED:

DIMENSIONS ARE IN INCHES
TOLERANCES:
FRACTIONAL ± 1/16"
ANGLES: ± 3°
TWO PLACE DECIMAL ± 0.01
THREE PLACE DECIMAL ± 0.005

MATERIAL 26G Steel

FINISH Coated

	NAME	DATE
DRAWN	KMN	10/03/24
CHECKED		
ENG APPR.		
MFG APPR.		
Q.A.		

COMMENTS:

ROLL UP DOOR INC.
505 Main Street Blackshear,GA 31516
912-449-9352

TITLE:
RDI SERIES 1000-WL
MAX. 10'-0" WIDE x MAX 10'-0" HIGH

SIZE	DWG. NO.	REV
A	WRD-1002	A

SHEET 1 OF 2

PROPRIETARY AND CONFIDENTIAL
THE INFORMATION CONTAINED IN THIS DRAWING IS THE SOLE PROPERTY OF ROLL UP DOOR INC. ANY REPRODUCTION IN PART OR AS A WHOLE WITHOUT THE WRITTEN PERMISSION OF ROLL UP DOOR INC. IS PROHIBITED.

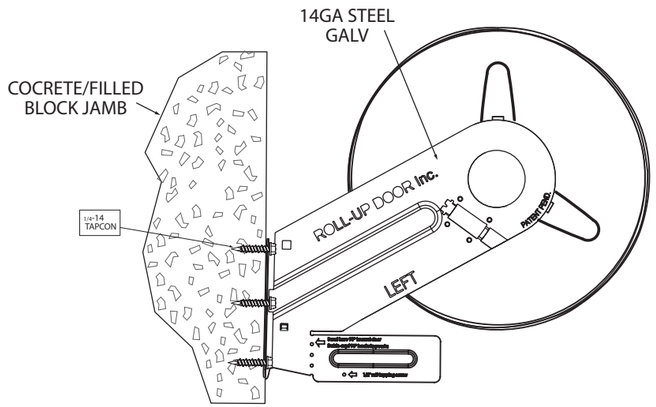

BRACKET MOUNTING TO MASONRY DETAIL

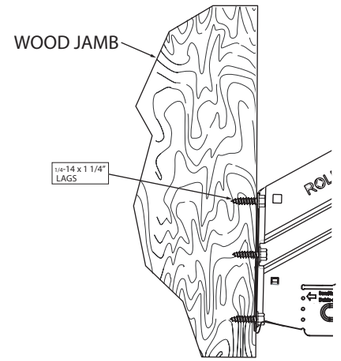

BRACKET MOUNTING TO WOOD DETAIL

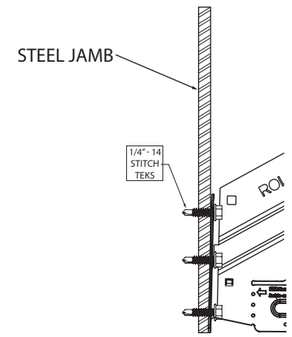

BRACKET MOUNTING TO STEEL DETAIL

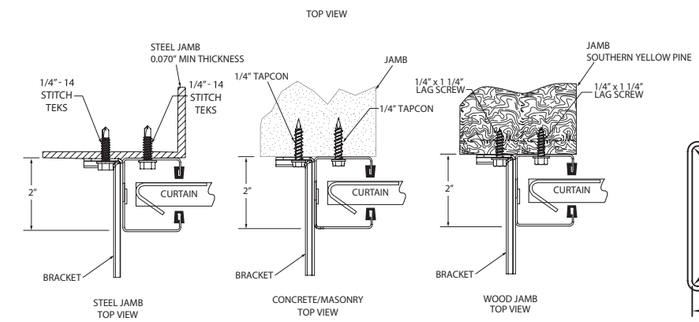

GUIDE MOUNT DETAIL

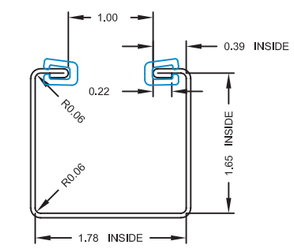

GUIDE DETAIL
18GA STEEL

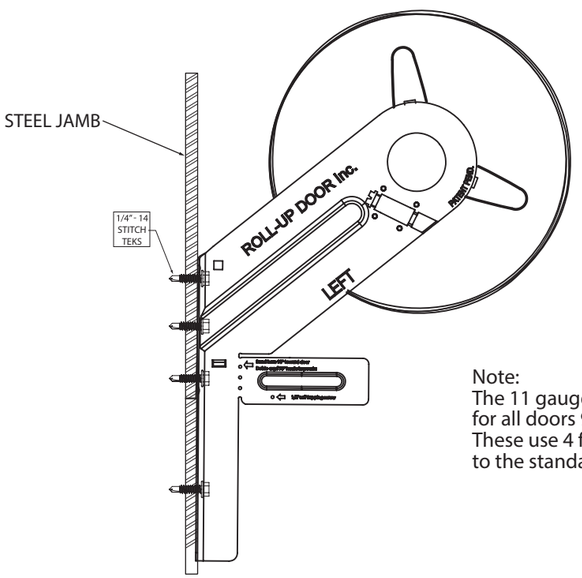

Note:
The 11 gauge extended bracket is used
for all doors 9' and over.
These use 4 fasteners as opposed
to the standard 14 gauge bracket using 3.

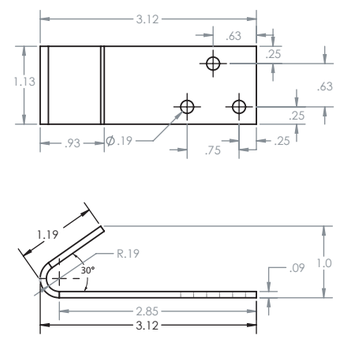

WINDCLIP

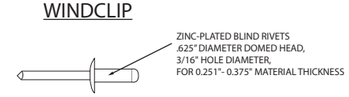

STEEL RIVET

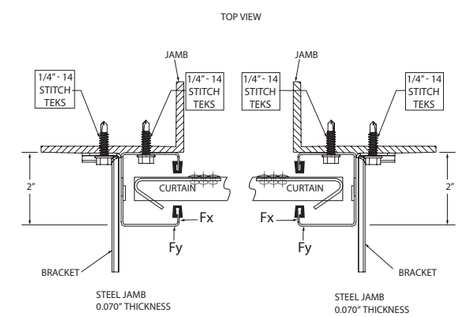

RIGHT AND LEFT GUIDE MOUNT DETAIL LOAD DIAGRAM
MIN 0.070" STEEL JAM SHOWN

SUPERINPOSED WIND CLIP FORCES		
DOOR WIDTH	FORCE (PLF)	
	Fx	Fy
10'0"	562.8	160
9'0"	478.1	167.9

PROPRIETARY AND CONFIDENTIAL
THE INFORMATION CONTAINED IN THIS DRAWING IS THE SOLE PROPERTY OF ROLL UP DOOR INC. ANY REPRODUCTION IN PART OR AS A WHOLE WITHOUT THE WRITTEN PERMISSION OF ROLL UP DOOR INC. IS PROHIBITED.

UNLESS OTHERWISE SPECIFIED:

DIMENSIONS ARE IN INCHES
TOLERANCES:
FRACTIONAL ± 1/16"
ANGLES: ± 3°
TWO PLACE DECIMAL ± 0.01
THREE PLACE DECIMAL ± 0.005

MATERIAL 26G Steel

FINISH Coated

	NAME	DATE
DRAWN	KMN	4/21/22
CHECKED		
ENG APPR.		
MFG APPR.		
Q.A.		

COMMENTS:

ROLL UP DOOR INC.
505 Main Street Blackshear,GA 31516
912-449-9352

TITLE: RDI SERIES 1000-WL
MAX. 10'-0" WIDE x MAX 10'-0" HIGH

SIZE	DWG. NO.	REV
A	WRD-1002	A

SHEET 2 OF 2