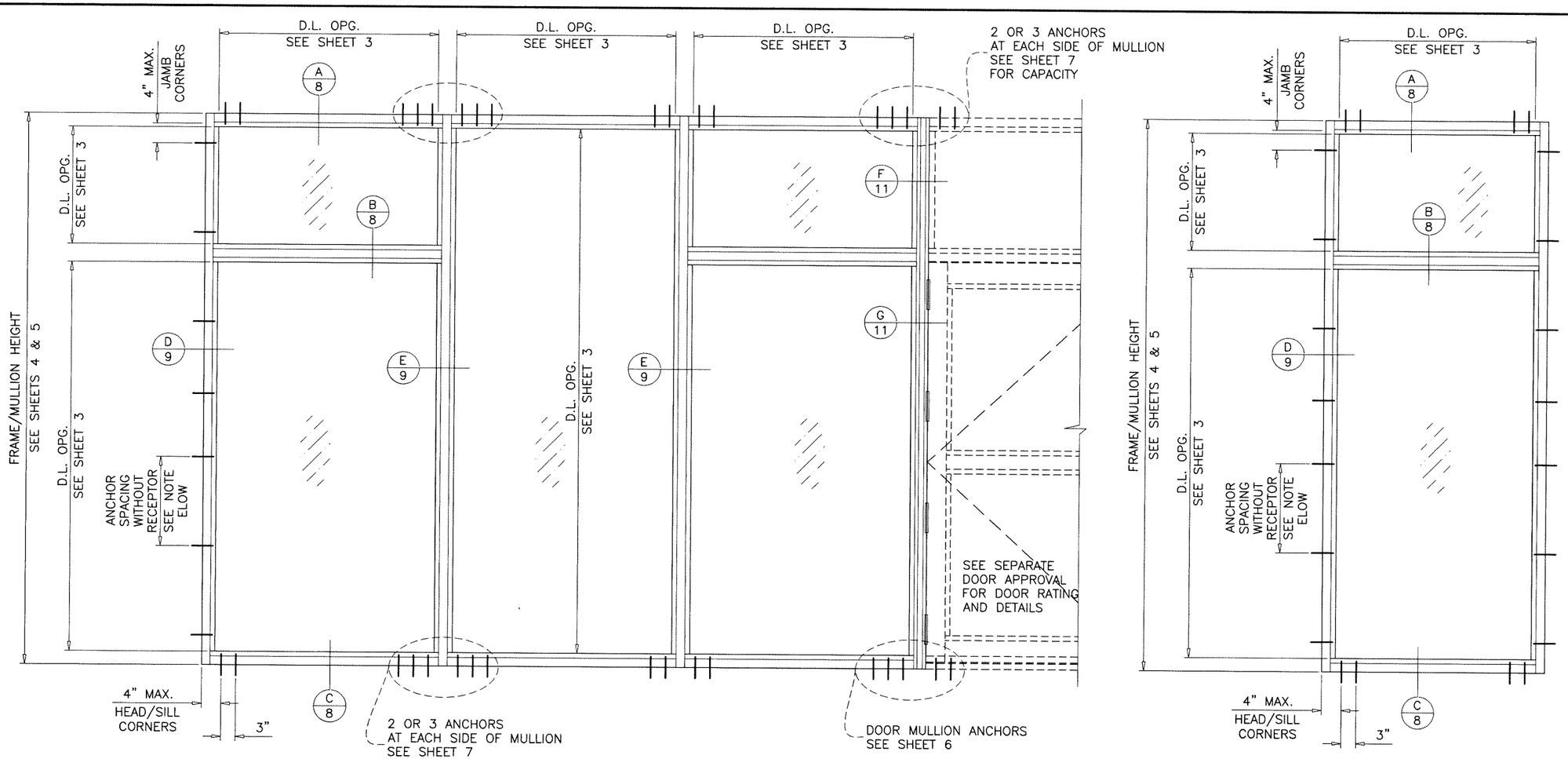


## MG–5500
## ALUMINUM WINDOW WALL SYSTEM

THIS PRODUCT HAS BEEN DESIGNED AND TESTED TO COMPLY WITH THE REQUIREMENTS OF THE 2023 (8TH EDITION) FLORIDA BUILDING CODE INCLUDING HIGH VELOCITY HURRICANE ZONE (HVHZ).

1BY OR 2BY WOOD BUCKS & BUCK FASTENERS BY OTHERS, MUST BE DESIGNED AND INSTALLED ADEQUATELY TO TRANSFER APPLIED PRODUCT LOADS TO THE BUILDING STRUCTURE.

ANCHORS SHALL BE CORROSION RESISTANT, SPACED AS SHOWN ON DETAILS AND INSTALLED PER MANUF'S INSTRUCTIONS. SPECIFIED EMBEDMENT TO BASE MATERIAL SHALL BE BEYOND WALL DRESSING OR STUCCO.

A LOAD DURATION INCREASE IS USED IN DESIGN OF ANCHORS INTO WOOD ONLY.

ALL SHIMS TO BE HIGH IMPACT, NON–METALLIC AND NON–COMPRESSIBLE.

MATERIALS INCLUDING BUT NOT LIMITED TO STEEL/METAL SCREWS, THAT COME INTO CONTACT WITH OTHER DISSIMILAR MATERIALS SHALL MEET THE REQUIREMENTS OF THE 2023 FLORIDA BLDG. CODE & ADOPTED STANDARDS.

THIS PRODUCT APPROVAL IS GENERIC AND DOES NOT PROVIDE INFORMATION FOR A SITE SPECIFIC PROJECT, i.e. LIFE SAFETY OF THIS PRODUCT, ADEQUACY OF STRUCTURE RECEIVING THIS PRODUCT AND SEALING AROUND OPENING FOR WATER INFILTRATION RESISTANCE ETC.
CONDITIONS NOT SHOWN IN THIS DRAWING ARE TO BE ANALYZED SEPARATELY, AND TO BE REVIEWED BY BUILDING OFFICIAL.

DESIGN LOADS SHOWN ARE BASED ON 'ALLOWABLE STRESS DESIGN (ASD)'.

MANUFACTURER'S LABEL SHALL BE LOCATED ON A READILY VISIBLE LOCATION IN ACCORDANCE WITH SECTION 1709.9.3 OF FLORIDA BUILDING CODE. LABELING TO COMPLY WITH SECTION 1709.9.2.

## TYPICAL ELEVATIONS
WITHOUT RECEPTORS

**JAMB ANCHOR SPACING:**
15" MAX. FOR SHIM SPACE UPTO 1/4" (1/4" DIA. ANCHORS)

8" MAX. FOR SHIM SPACE 3/4" (5/16" DIA. ANCHORS ONLY)
THRU FRAME JAMB W/O RECEPTOR (SEE SHEET 10 FOR ANCHOR SPEC.)

## INSTRUCTIONS:
USE CHARTS AS FOLLOWS.

**STEP 1** DETERMINE DESIGN WIND LOAD REQUIREMENT BASED ON WIND VELOCITY, BLDG. HEIGHT, WIND ZONE USING APPLICABLE ASCE 7 STANDARD.

**STEP 2** SEE CHARTS ON SHEET 3 FOR DESIGN LOAD CAPACITY OF DESIRED GLASS SIZE.

**STEP 3** CHECK MULLION CAPACITY FOR A GIVEN SPACING AND HEIGHT USING CHARTS ON SHEETS 4 & 5 FOR STOREFRONT MULLION AND SHEET 6 FOR DOOR MULLION. THE CAPACITY SHOULD EXCEED THE DESIGN LOAD.

**STEP 4** USING CHART ON SHEETS 7 SELECT ANCHOR OPTION WITH DESIGN RATING MORE THAN DESIGN LOAD SPECIFIED IN STEP 1 ABOVE.

**STEP 5** THE LOWEST VALUE RESULTING FROM STEPS 2, 3 AND 4 SHALL APPLY TO ENTIRE SYSTEM.

THIS SYSTEM MAY BE USED IN CONJUNCTION WITH F.B.C. APPROVED FRENCH DOORS.
LOWER DESIGN PRESSURE FROM WINDOW WALL OR DOOR APPROVAL WILL APPLY TO ENTIRE SYSTEM.

PRODUCT COMPLIES WITH REQUIREMENTS OF ANSI Z97.1.

THIS SYSTEM IS RATED FOR LARGE & SMALL MISSILE IMPACT.
SHUTTERS ARE NOT REQUIRED.

Sealed: 1/6/2025

FL #47224

A– CONTRACTOR TO BE RESPONSIBLE FOR THE SELECTION, PURCHASE AND INSTALLATION OF THIS PRODUCT BASED ON THIS PRODUCT EVALUATION PROVIDED HE/SHE DOES NOT DEVIATE FROM THE CONDITIONS DETAILED ON THIS DOCUMENT.

B– THIS PRODUCT EVALUATION DOCUMENT WILL BE CONSIDERED INVALID IF ALTERED BY ANY MEANS.

C– SITE SPECIFIC PROJECTS SHALL BE PREPARED BY A FLORIDA REGISTERED ENGINEER OR ARCHITECT WHICH WILL BECOME THE ENGINEER OF RECORD (E.O.R.) FOR THE PROJECT AND WHO WILL BE RESPONSIBLE FOR THE PROPER USE OF THE P.E.D. ENGINEER OF RECORD, ACTING AS A DELEGATED ENGINEER TO THE P.E.D. ENGINEER SHALL SUBMIT TO THIS LATTER THE SITE SPECIFIC DRAWINGS FOR REVIEW.

D– THIS P.E.D. SHALL BEAR THE DATE AND ORIGINAL SEAL AND SIGNATURE OF THE PROFESSIONAL ENGINEER OF RECORD THAT PREPARED IT.

JALAL FAROOQ LICENSE No. 81223 STATE OF FLORIDA PROFESSIONAL ENGINEER


**AL-FAROOQ CORPORATION**
ENGINEERS & PRODUCT DEVELOPMENT
9360 SUNSET DRIVE, SUITE 220
MIAMI, FLORIDA 33173
TEL. (305) 264-8100 WWW.AFCENG.COM
FBPE #3538


STORE\24–85F–MG

MG–5500 ALUMINUM WINDOW WALL SYSTEM (L.M.I.)


MR–GLASS DOORS & WINDOWS MANUFACTURING, LLC
8051 N.W. 79th Place
Medley, FL. 33166
Tel. (305) 764–3963 www.mrglasswindows.com


revisions:

| no | date | by | description |
|---|---|---|---|

date: 11–27–24
scale: 1/2"=1'–0"
dr. by: TARIQ
chk. by:

drawing no. 24–85F

sheet 1 of 13

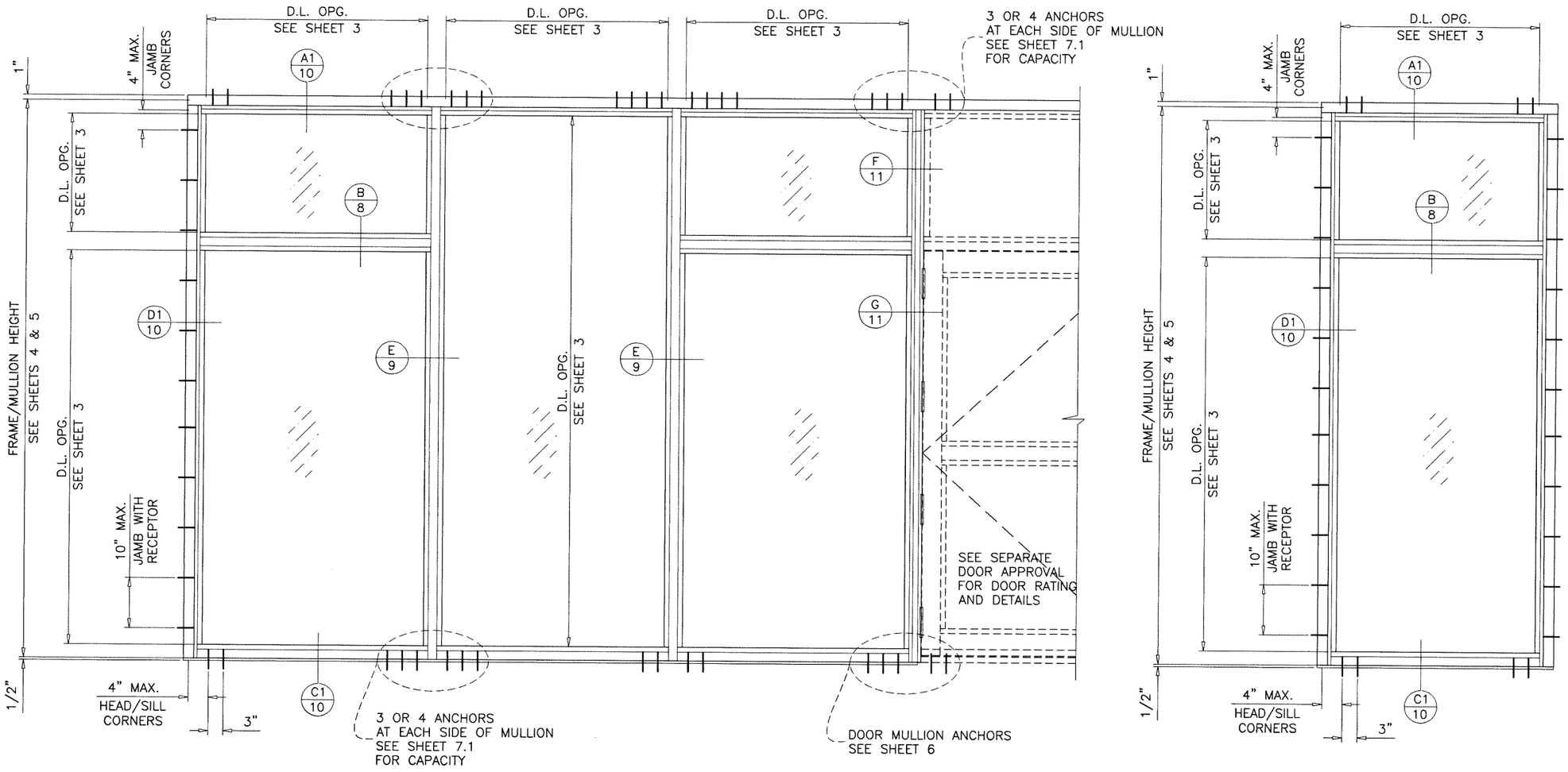


TYPICAL ELEVATIONS
WITH RECEPTORS

Sealed: 1/6/2025

JALAL FAROOQ
LICENSE
No. 81223
STATE OF FLORIDA
PROFESSIONAL ENGINEER

FL #47224


afc
AL-FAROOQ CORPORATION
ENGINEERS & PRODUCT DEVELOPMENT
9360 SUNSET DRIVE, SUITE 220
MIAMI, FLORIDA 33173
TEL. (305) 264-8100
WWW.AFCENG.COM
FBPE #3538


STORE\24-85F-MG

MG-5500 ALUMINUM WINDOW WALL SYSTEM (L.M.I.)


MR-GLASS DOORS & WINDOWS MANUFACTURING, LLC
8051 N.W. 79th Place
Medley, FL. 33166
Tel. (305) 764-3963 www.mrglasswindows.com


| revisions: | | |
|---|---|---|
| no | date | by description |
| | | |

date: 11-27-24
scale: 1/2"=1'-0"
dr. by: TARIQ
chk. by:

drawing no.
24-85F

| STAND ALONE FIXED WINDOW DESIGN LOAD CAPACITY – PSF | | | |
|---|---|---|---|
| NOMINAL DIMS. | | GLASS TYPE 'B' | |
| D.L.O. WIDTH | D.L.O. HEIGHT | EXT.(+) | INT.(–) |
| 54–5/8" | 90–5/8" | 70.0 | 70.0 |
| 60–5/8" | | 70.0 | 70.0 |
| 66–5/8" | | 70.0 | 70.0 |
| 72–5/8" | | 70.0 | 70.0 |
| 78–5/8" | | 70.0 | 70.0 |
| 84–5/8" | | 65.0 | 65.0 |
| 90–5/8" | | 60.7 | 60.7 |
| 94–5/8" | | 60.7 | 60.7 |
| 54–5/8" | 102–5/8" | 70.0 | 70.0 |
| 60–5/8" | | 70.0 | 70.0 |
| 66–5/8" | | 70.0 | 70.0 |
| 72–5/8" | | 70.0 | 70.0 |
| 78–5/8" | | 70.0 | 70.0 |
| 84–5/8" | | 65.0 | 65.0 |
| 54–5/8" | 114–5/8" | 70.0 | 70.0 |
| 60–5/8" | | 70.0 | 70.0 |
| 66–5/8" | | 70.0 | 70.0 |
| 72–5/8" | | 70.0 | 70.0 |
| 78–5/8" | | 70.0 | 70.0 |
| 54–5/8" | 120–5/8" | 70.0 | 70.0 |
| 60–5/8" | | 70.0 | 70.0 |
| 66–5/8" | | 70.0 | 70.0 |
| 72–5/8" | | 70.0 | 70.0 |
| 54–5/8" | 132–5/8" | 70.0 | 70.0 |
| 60–5/8" | | 70.0 | 70.0 |
| 66–5/8" | | 70.0 | 70.0 |
| 54–5/8" | 138–5/8" | 70.0 | 70.0 |
| 60–5/8" | | 70.0 | 70.0 |

INTERPOLATION BETWEEN WIDTHS OR HEIGHTS ALLOWED.

NOTE:
GLASS CAPACITIES ON THIS SHEET ARE BASED ON ASTM E1300–09 (3 SEC. GUSTS).

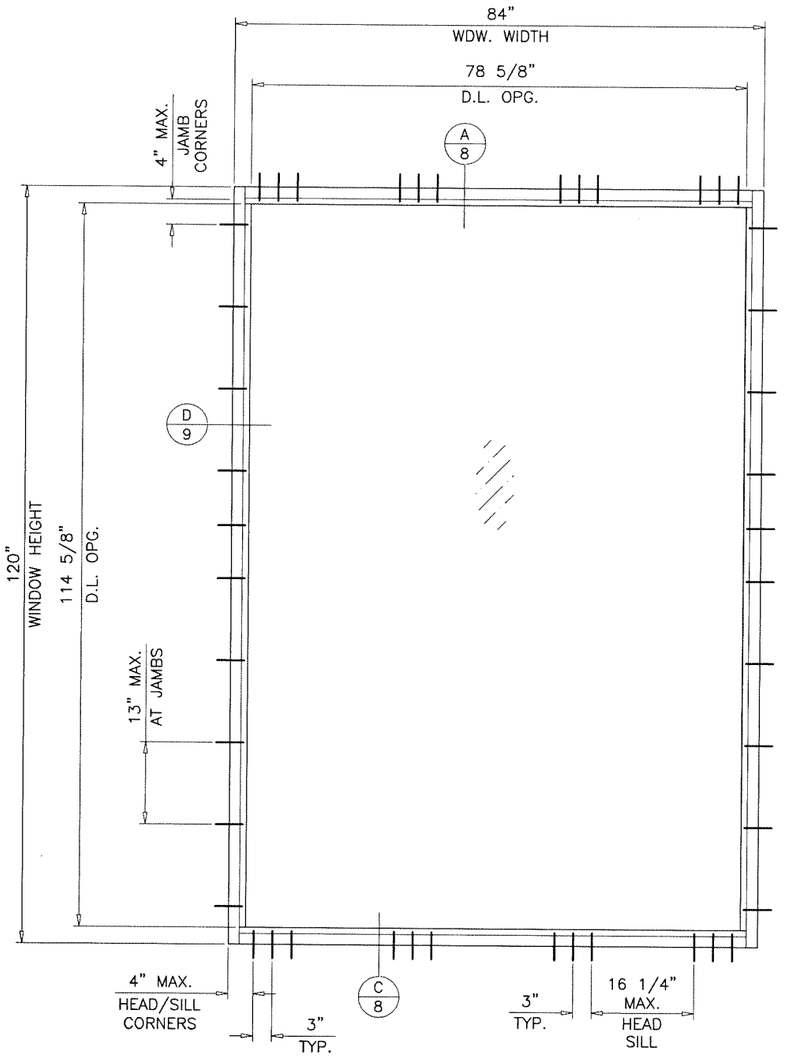


TYPICAL ELEVATION
SINGLE (0) PANEL
TESTED UNIT

## MG–5500 FIXED WINDOW

MAXIMUM DESIGN LOAD RATING = +70.0 PSF
–70.0 PSF

FOR WINDOW SIZES SHOWN ON THIS SHEET ONLY
LIMITED TO
GLASS TYPE 'B' ONLY
ANCHOR TYPES SHOWN ON SHEET 8 ONLY
1/2" MAX. SHIMS AT HEAD/SILL
3/8" MAX. SHIMS AT JAMBS

THESE FRAMES CAN BE USED AT ALL SUBSTRATES SHOWN ON SHEETS 8 AND 9.

Sealed: 1/6/2025

JALAL FAROOQ LICENSE No. 81223 STATE OF FLORIDA PROFESSIONAL ENGINEER

FL #47224


AL-FAROOQ CORPORATION
ENGINEERS & PRODUCT DEVELOPMENT
9360 SUNSET DRIVE, SUITE 220
MIAMI, FLORIDA 33173
TEL. (305) 264-8100
WWW.AFCENG.COM
FBPE #3538


STORE\24–85F–MG

MG–5500 ALUMINUM WINDOW WALL SYSTEM (L.M.I.)

MR–GLASS DOORS & WINDOWS MANUFACTURING, LLC
8051 N.W. 79th Place
Medley, FL. 33166
Tel. (305) 764–3963 www.mrglasswindows.com

revisions:

| no | date | by | description |
|---|---|---|---|

date: 11–27–24
scale: 1/2"=1'–0"
dr. by: TARIQ
chk. by:

drawing no. 24–85F

sheet 2.1 of 13

| GLASS LOAD CAPACITY – PSF | | | | | |
|---|---|---|---|---|---|
| NOMINAL DIMS. | | GLASS TYPES 'A' & 'Ai' | | GLASS TYPE 'B' | |
| D.L.O. WIDTH | D.L.O. HEIGHT | EXT.(+) | INT.(–) | EXT.(+) | INT.(–) |
| 28–3/8" | 71–5/8" | 75.0 | 75.0 | 70.0 | 70.0 |
| 32–3/8" | | 75.0 | 75.0 | 70.0 | 70.0 |
| 38–3/8" | | 75.0 | 75.0 | 70.0 | 70.0 |
| 44–3/8" | | 75.0 | 75.0 | 70.0 | 70.0 |
| 50–3/8" | | 66.1 | 66.1 | 70.0 | 70.0 |
| 54–3/8" | | 61.2 | 61.2 | 70.0 | 70.0 |
| 62–3/8" | | 53.4 | 53.4 | 70.0 | 70.0 |
| 28–3/8" | 79–5/8" | 75.0 | 75.0 | 70.0 | 70.0 |
| 32–3/8" | | 75.0 | 75.0 | 70.0 | 70.0 |
| 38–3/8" | | 75.0 | 75.0 | 70.0 | 70.0 |
| 44–3/8" | | 75.0 | 75.0 | 70.0 | 70.0 |
| 50–3/8" | | 66.1 | 66.1 | 70.0 | 70.0 |
| 54–3/8" | | 61.2 | 61.2 | 70.0 | 70.0 |
| 62–3/8" | | – | – | 70.0 | 70.0 |
| 28–3/8" | 85–5/8" | 75.0 | 75.0 | 70.0 | 70.0 |
| 32–3/8" | | 75.0 | 75.0 | 70.0 | 70.0 |
| 38–3/8" | | 75.0 | 75.0 | 70.0 | 70.0 |
| 44–3/8" | | 75.0 | 75.0 | 70.0 | 70.0 |
| 50–3/8" | | 66.1 | 66.1 | 70.0 | 70.0 |
| 54–3/8" | | – | – | 70.0 | 70.0 |
| 62–3/8" | | – | – | 70.0 | 70.0 |
| 28–3/8" | 102–5/8" | 75.0 | 75.0 | 70.0 | 70.0 |
| 32–3/8" | | 75.0 | 75.0 | 70.0 | 70.0 |
| 38–3/8" | | 75.0 | 75.0 | 70.0 | 70.0 |
| 44–3/8" | | 75.0 | 75.0 | 70.0 | 70.0 |
| 50–3/8" | | – | – | 70.0 | 70.0 |
| 54–3/8" | | – | – | 70.0 | 70.0 |
| 62–3/8" | | – | – | 70.0 | 70.0 |
| 28–3/8" | 114–5/8" | – | – | 70.0 | 70.0 |
| 32–3/8" | | – | – | 70.0 | 70.0 |
| 38–3/8" | | – | – | 70.0 | 70.0 |
| 44–3/8" | | – | – | 70.0 | 70.0 |
| 50–3/8" | | – | – | 70.0 | 70.0 |
| 54–3/8" | | – | – | 70.0 | 70.0 |
| 62–3/8" | | – | – | 70.0 | 70.0 |

INTERPOLATION BETWEEN WIDTHS OR HEIGHTS ALLOWED.

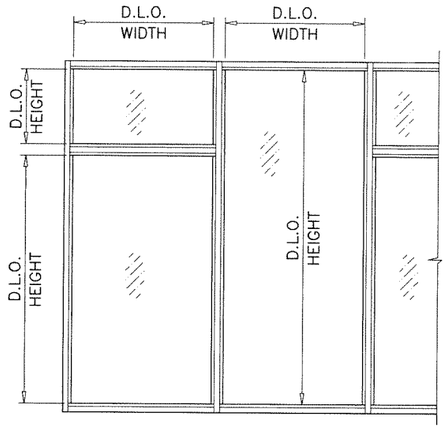


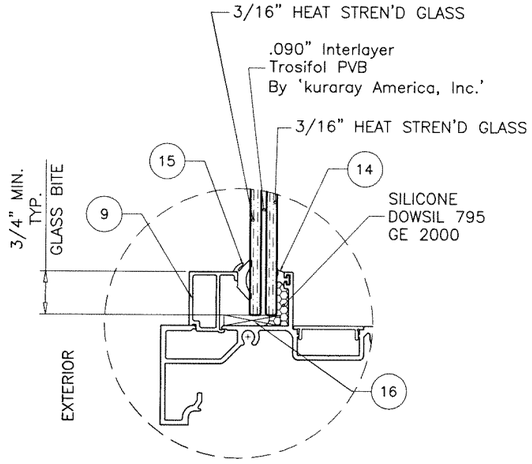


GLASS TYPE 'A'
7/16" INSUL. LAM. GLASS

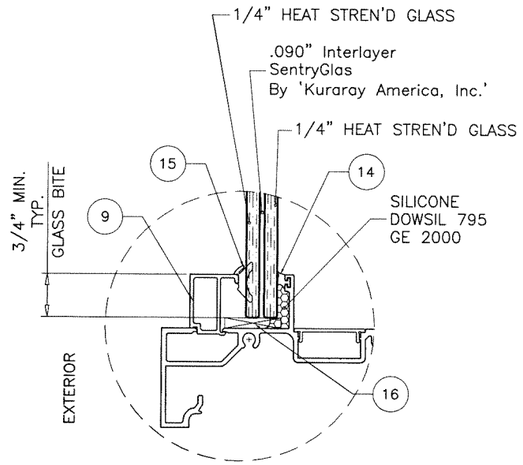


GLASS TYPE 'B'
9/16" INSUL. LAM. GLASS

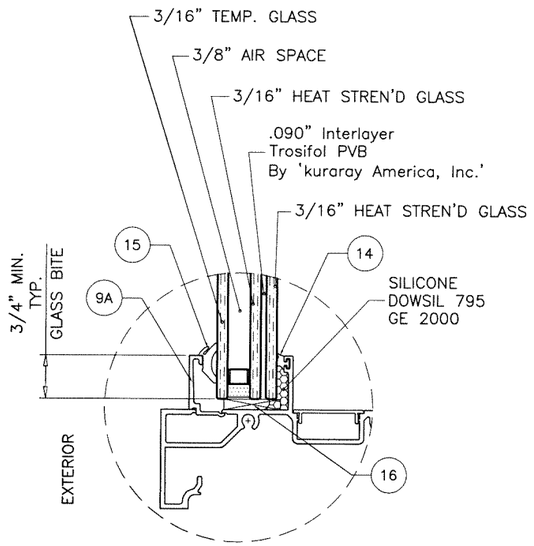


GLASS TYPE 'Ai'
1–1/16" INSUL. LAM. GLASS

GLASS

GLAZING OPTIONS

Sealed: 1/6/2025

NOTE:
GLASS CAPACITIES ON THIS SHEET ARE BASED ON ASTM E1300–09 (3 SEC. GUSTS).

FL #47224


AL-FAROOQ CORPORATION
ENGINEERS & PRODUCT DEVELOPMENT
9360 SUNSET DRIVE, SUITE 220
MIAMI, FLORIDA 33173
TEL. (305) 264-8100
FBPE #3538
WWW.AFCENG.COM
STORE\24-85F-MG

MG-5500 ALUMINUM WINDOW WALL SYSTEM (L.M.I.)

MR-GLASS DOORS & WINDOWS MANUFACTURING, LLC
8051 N.W. 79th Place
Medley, FL. 33166
Tel. (305) 764-3963
www.mrglasswindows.com


revisions:

| no | date | by | description |
|---|---|---|---|

date: 11-27-24
scale: 3/8" = 1"
dr. by: TARIQ
chk. by:

drawing no. 24–85F

sheet 3 of 13

## MULLION LOAD CAPACITY – PSF
## WITHOUT INTERMEDIATE HORIZONTALS

| NOMINAL DIMS. | | MULLION 'M1' | MULLION 'M2' | MULLION 'M3' |
|---|---|---|---|---|
| WIDTH (W) | FRAME HEIGHT | EXT.(+)/INT.(–) | EXT.(+)/INT.(–) | EXT.(+)/INT.(–) |
| 30" | 84" | 75.0 | 75.0 | 75.0 |
| 36" | | 75.0 | 75.0 | 75.0 |
| 42" | | 75.0 | 75.0 | 75.0 |
| 48" | | 75.0 | 75.0 | 75.0 |
| 54" | | 75.0 | 75.0 | 75.0 |
| 60" | | 75.0 | 75.0 | 75.0 |
| 66" | | 75.0 | 75.0 | 75.0 |
| 30" | 90" | 75.0 | 75.0 | 75.0 |
| 36" | | 75.0 | 75.0 | 75.0 |
| 42" | | 75.0 | 75.0 | 75.0 |
| 48" | | 75.0 | 75.0 | 75.0 |
| 54" | | 71.6 | 75.0 | 75.0 |
| 60" | | 66.6 | 75.0 | 75.0 |
| 30" | 96" | 75.0 | 75.0 | 75.0 |
| 36" | | 75.0 | 75.0 | 75.0 |
| 42" | | 75.0 | 75.0 | 75.0 |
| 48" | | 67.5 | 75.0 | 75.0 |
| 54" | | 61.5 | 75.0 | 75.0 |
| 60" | | 56.9 | 75.0 | 75.0 |
| 30" | 102" | 75.0 | 75.0 | 75.0 |
| 36" | | 75.0 | 75.0 | 75.0 |
| 42" | | 66.1 | 75.0 | 75.0 |
| 48" | | 58.9 | 75.0 | 75.0 |
| 54" | | 53.4 | 75.0 | 75.0 |
| 30" | 108" | 75.0 | 75.0 | 75.0 |
| 36" | | 64.8 | 75.0 | 75.0 |
| 42" | | 56.5 | 75.0 | 75.0 |
| 48" | | 50.4 | 75.0 | 75.0 |
| 30" | 114" | 65.0 | 75.0 | 75.0 |
| 36" | | 54.8 | 75.0 | 75.0 |
| 42" | | 47.7 | 75.0 | 75.0 |
| 48" | | 42.5 | 75.0 | 75.0 |
| 30" | 120" | 55.6 | 75.0 | 75.0 |
| 36" | | 46.8 | 75.0 | 75.0 |
| 42" | | 40.7 | 75.0 | 75.0 |
| 48" | | 36.2 | 68.7 | 71.5 |

INTERPOLATION BETWEEN WIDTHS OR HEIGHTS ALLOWED.

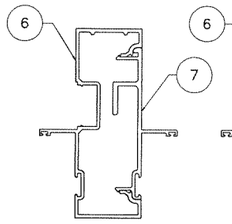


MULLION 'M1'

| Ix IN^4 | Sx IN^3 |
|---|---|
| 4.539 | 1.868 |

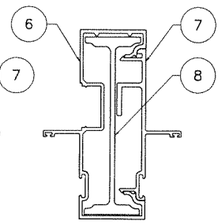


MULLION 'M2'

| Ix IN^4 | Sx IN^3 |
|---|---|
| 8.621 | 3.610 |

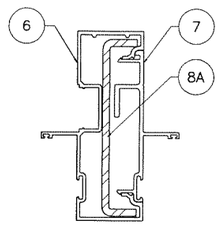


MULLION 'M3'

| | Ix IN^4 | Sx IN^3 |
|---|---|---|
| ALUMINUM | 4.539 | 1.868 |
| STEEL | 1.986 | .846 |
| TOTAL Ix ALUM + Ix STL X 2.9 | 10.289 | |

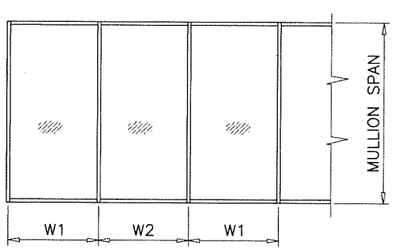


$$\text{WIDTH (W)} = \frac{W1 + W2}{2}$$

MULLIONS

Sealed: 1/6/2025

FL #47224


AL-FAROOQ CORPORATION
ENGINEERS & PRODUCT DEVELOPMENT
9360 SUNSET DRIVE, SUITE 220
MIAMI, FLORIDA 33173
TEL. (305) 264-8100
WWW.AFCENG.COM
FBPE #3538


STORE\24-85F-MG

MG-5500 ALUMINUM WINDOW WALL SYSTEM (L.M.I.)

MR-GLASS DOORS & WINDOWS MANUFACTURING, LLC
8051 N.W. 79th Place
Medley, FL. 33166
Tel. (305) 764-3963 www.mrglasswindows.com

revisions:

| no | date | by | description |
|---|---|---|---|

date: 11-27-24
scale: 3/8" = 1"
dr. by: TARIQ
chk. by:

drawing no. 24-85F

sheet 4 of 13

## MULLION LOAD CAPACITY – PSF
## WITH INTERMEDIATE HORIZONTALS

| NOMINAL DIMS. | | MULLION 'M1' | MULLION 'M2' | MULLION 'M3' |
|---|---|---|---|---|
| WIDTH (W) | FRAME HEIGHT | EXT.(+)/INT.(−) | EXT.(+)/INT.(−) | EXT.(+)/INT.(−) |
| 30" | 84" | 75.0 | 75.0 | 75.0 |
| 36" | | 75.0 | 75.0 | 75.0 |
| 42" | | 75.0 | 75.0 | 75.0 |
| 48" | | 75.0 | 75.0 | 75.0 |
| 54" | | 72.9 | 75.0 | 75.0 |
| 60" | | 65.6 | 75.0 | 75.0 |
| 66" | | 59.6 | 75.0 | 75.0 |
| 30" | 90" | 75.0 | 75.0 | 75.0 |
| 36" | | 75.0 | 75.0 | 75.0 |
| 42" | | 75.0 | 75.0 | 75.0 |
| 48" | | 71.0 | 75.0 | 75.0 |
| 54" | | 63.1 | 75.0 | 75.0 |
| 60" | | 56.8 | 75.0 | 75.0 |
| 30" | 96" | 75.0 | 75.0 | 75.0 |
| 36" | | 75.0 | 75.0 | 75.0 |
| 42" | | 70.9 | 75.0 | 75.0 |
| 48" | | 62.0 | 75.0 | 75.0 |
| 54" | | 55.1 | 75.0 | 75.0 |
| 60" | | 49.6 | 75.0 | 75.0 |
| 30" | 102" | 75.0 | 75.0 | 75.0 |
| 36" | | 72.8 | 75.0 | 75.0 |
| 42" | | 62.4 | 75.0 | 75.0 |
| 48" | | 54.6 | 75.0 | 75.0 |
| 54" | | 48.6 | 75.0 | 75.0 |
| 30" | 108" | 74.5 | 75.0 | 75.0 |
| 36" | | 62.1 | 75.0 | 75.0 |
| 42" | | 53.2 | 75.0 | 75.0 |
| 48" | | 46.6 | 75.0 | 75.0 |
| 30" | 114" | 63.4 | 75.0 | 75.0 |
| 36" | | 52.8 | 75.0 | 75.0 |
| 42" | | 45.3 | 75.0 | 75.0 |
| 48" | | 39.6 | 75.0 | 75.0 |
| 30" | 120" | 54.3 | 75.0 | 75.0 |
| 36" | | 45.3 | 75.0 | 75.0 |
| 42" | | 38.8 | 73.7 | 75.0 |
| 48" | | 34.0 | 64.5 | 67.8 |

INTERPOLATION BETWEEN WIDTHS OR HEIGHTS ALLOWED.

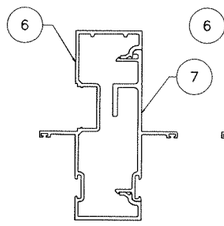


MULLION 'M1'

| Ix IN^4 | Sx IN^3 |
|---|---|
| 4.539 | 1.868 |

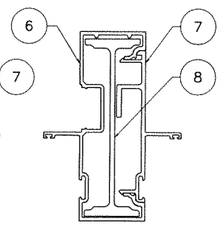


MULLION 'M2'

| Ix IN^4 | Sx IN^3 |
|---|---|
| 8.621 | 3.610 |

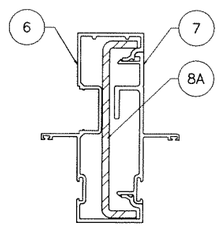


MULLION 'M3'

| | Ix IN^4 | Sx IN^3 |
|---|---|---|
| ALUMINUM | 4.539 | 1.868 |
| STEEL | 1.986 | .846 |
| TOTAL Ix ALUM + Ix STL X 2.9 | 10.289 | |

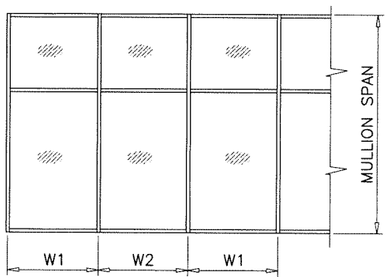


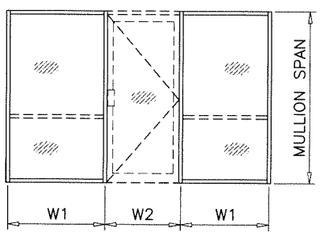


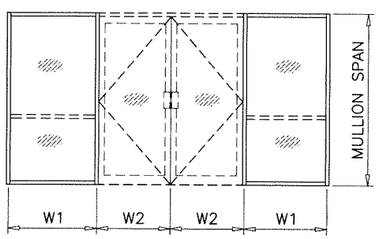


$$\text{WIDTH (W)} = \frac{W1 + W2}{2}$$

MULLIONS

Sealed: 1/6/2025

JALAL FAROOQ LICENSE No. 81223 STATE OF FLORIDA PROFESSIONAL ENGINEER

FL #47224


AL-FAROOQ CORPORATION
ENGINEERS & PRODUCT DEVELOPMENT
9360 SUNSET DRIVE, SUITE 220
MIAMI, FLORIDA 33173
TEL. (305) 264-8100
WWW.AFCENG.COM
FBPE #3538


STORE\24-85F-MG

MG-5500 ALUMINUM WINDOW WALL SYSTEM (L.M.I.)


MR-GLASS DOORS & WINDOWS MANUFACTURING, LLC
8051 N.W. 79th Place
Medley, FL. 33166
Tel. (305) 764-3963 www.mrglasswindows.com


revisions:

| no | date | by | description |
|---|---|---|---|

date: 11-27-24
scale: 3/8" = 1"
dr. by: TARIQ
chk. by:

drawing no. 24-85F

sheet 5 of 13

## DOOR MULLION LOAD CAPACITY – PSF

| NOMINAL DIMS. | | | | MULLION 'DM1' | MULLION 'DM2' | MULLION 'DM3' |
|---|---|---|---|---|---|---|
| WIDTH (W1) INCHES | DOOR HEIGHT INCHES | FRAME HEIGHT INCHES | WIDTH (W2) INCHES | EXT. (+) INT. (–) | EXT. (+) INT. (–) | EXT. (+) INT. (–) |
| 40–5/8 (X) 80–7/8 (XX) | 84 | 102 | 30 | 56.8 | 75.0 | 75.0 |
| | | | 36 | 53.4 | 75.0 | 75.0 |
| | | | 42 | 50.4 | 75.0 | 75.0 |
| | | | 48 | 47.7 | 75.0 | 75.0 |
| | | | 54 | 45.3 | 75.0 | 75.0 |
| | | 108 | 36 | 45.6 | 75.0 | 75.0 |
| | | | 42 | 43.1 | 75.0 | 72.7 |
| | | | 48 | 40.9 | 74.5 | 69.0 |
| | | 114 | 30 | 42.0 | 75.0 | 70.8 |
| | | | 36 | 39.6 | 72.2 | 66.9 |
| | | | 42 | 37.4 | 68.4 | 63.3 |
| | | | 48 | 35.3 | 64.9 | 60.2 |
| | | 120 | 30 | 35.0 | 66.5 | 62.3 |
| | | | 36 | 32.9 | 62.5 | 58.9 |
| | | | 42 | 31.0 | 58.9 | 55.9 |
| | | | 48 | 29.4 | 55.8 | 53.1 |
| | | 144 | 30 | 35.0 | 35.5 | 41.2 |
| | | | 36 | 32.9 | 33.5 | 39.0 |
| | | | 42 | 31.0 | 31.8 | 37.1 |
| | | | 48 | 29.4 | 30.2 | 35.4 |
| 40–5/8 (X) 80–7/8 (XX) | 90 | 102 | 30 | 60.8 | 75.0 | 75.0 |
| | | | 36 | 56.9 | 75.0 | 75.0 |
| | | | 42 | 53.5 | 75.0 | 75.0 |
| | | | 48 | 50.4 | 75.0 | 75.0 |
| | | | 54 | 47.7 | 75.0 | 75.0 |
| | | 108 | 36 | 47.9 | 75.0 | 75.0 |
| | | | 42 | 45.1 | 75.0 | 75.0 |
| | | | 48 | 42.7 | 75.0 | 72.4 |
| | | 114 | 30 | 43.7 | 75.0 | 74.1 |
| | | | 36 | 41.1 | 74.6 | 69.8 |
| | | | 42 | 38.9 | 70.5 | 65.9 |
| | | | 48 | 36.8 | 66.9 | 62.5 |
| | | 120 | 30 | 36.9 | 69.1 | 64.6 |
| | | | 36 | 34.5 | 65.2 | 60.9 |
| | | | 42 | 32.5 | 61.6 | 57.7 |
| | | | 48 | 30.6 | 58.2 | 54.8 |
| | | 144 | 30 | 36.9 | 36.3 | 41.7 |
| | | | 36 | 34.5 | 34.2 | 39.5 |
| | | | 42 | 32.5 | 32.4 | 37.5 |
| | | | 48 | 30.6 | 30.7 | 35.8 |
| 40–5/8 (X) 80–7/8 (XX) | 96 | 108 | 36 | 50.9 | 75.0 | 75.0 |
| | | | 42 | 47.8 | 75.0 | 75.0 |
| | | | 48 | 45.1 | 75.0 | 75.0 |
| | | 114 | 30 | 45.9 | 75.0 | 75.0 |
| | | | 36 | 43.1 | 75.0 | 73.6 |
| | | | 42 | 40.6 | 73.6 | 69.3 |
| | | | 48 | 38.4 | 69.6 | 65.6 |
| | | 120 | 30 | 39.0 | 71.7 | 67.5 |
| | | | 36 | 36.4 | 67.5 | 63.6 |
| | | | 42 | 34.1 | 63.7 | 60.1 |
| | | | 48 | 32.1 | 60.4 | 56.9 |
| | | 144 | 30 | 39.0 | 37.4 | 42.5 |
| | | | 36 | 36.4 | 35.2 | 40.2 |
| | | | 42 | 34.1 | 33.2 | 38.2 |
| | | | 48 | 32.1 | 31.5 | 36.3 |

## DOOR MULLION LOAD CAPACITY – PSF

| NOMINAL DIMS. | | | | MULLION 'DM1' | MULLION 'DM2' | MULLION 'DM3' |
|---|---|---|---|---|---|---|
| WIDTH (W1) INCHES | DOOR HEIGHT INCHES | FRAME HEIGHT INCHES | WIDTH (W2) INCHES | EXT. (+) INT. (–) | EXT. (+) INT. (–) | EXT. (+) INT. (–) |
| 40–5/8 (X) 80–7/8 (XX) | 102 | 114 | 30 | 49.0 | 75.0 | 75.0 |
| | | | 36 | 45.8 | 75.0 | 75.0 |
| | | | 42 | 43.0 | 75.0 | 73.8 |
| | | | 48 | 40.5 | 73.2 | 69.5 |
| | | 120 | 30 | 41.4 | 75.0 | 71.4 |
| | | | 36 | 38.5 | 70.5 | 67.0 |
| | | | 42 | 36.0 | 66.4 | 63.1 |
| | | | 48 | 33.7 | 62.8 | 59.6 |
| | | 144 | 30 | 20.4 | 38.8 | 43.5 |
| | | | 36 | 19.2 | 36.4 | 41.1 |
| | | | 42 | 18.1 | 34.3 | 39.0 |
| | | | 48 | 17.1 | 32.5 | 37.1 |
| 40–5/8 (X) 80–7/8 (XX) | 108 | 114 | 30 | 53.1 | 75.0 | 75.0 |
| | | | 36 | 49.0 | 75.0 | 75.0 |
| | | | 42 | 45.5 | 75.0 | 75.0 |
| | | | 48 | 42.5 | 75.0 | 74.7 |
| | | 120 | 30 | 43.8 | 75.0 | 75.0 |
| | | | 36 | 40.5 | 74.6 | 71.5 |
| | | | 42 | 37.7 | 70.0 | 67.1 |
| | | | 48 | 35.3 | 65.9 | 63.2 |
| | | 144 | 30 | 21.3 | 40.5 | 44.8 |
| | | | 36 | 20.0 | 37.9 | 42.3 |
| | | | 42 | 18.8 | 35.7 | 40.1 |
| | | | 48 | 17.7 | 33.7 | 38.0 |

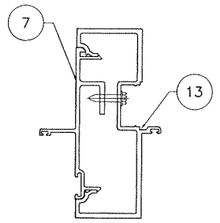


MULLION 'DM1'

| Ix IN^4 | Sx IN^3 |
|---|---|
| 4.539 | 1.868 |

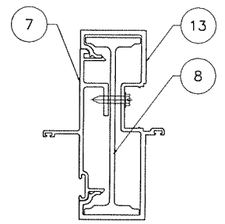


MULLION 'DM2'

| Ix IN^4 | Sx IN^3 |
|---|---|
| 8.621 | 3.610 |

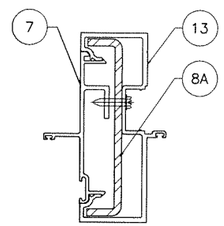


MULLION 'DM3'

| | Ix IN^4 | Sx IN^3 |
|---|---|---|
| ALUMINUM | 4.539 | 1.868 |
| STEEL | 1.986 | .846 |
| TOTAL Ix ALUM + Ix STL X 2.9 | 10.829 | |

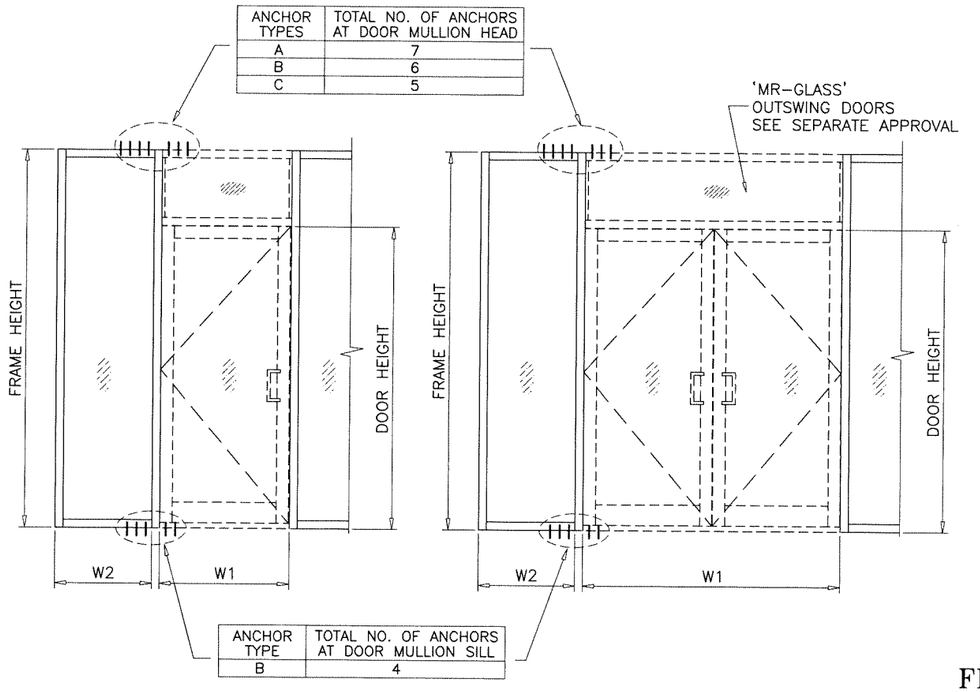


Sealed: 1/6/2025

DOOR MULLION

JALAL FAROOQ LICENSE No. 81223 STATE OF FLORIDA PROFESSIONAL ENGINEER

FL #47224


afc
AL-FAROOQ CORPORATION
ENGINEERS & PRODUCT DEVELOPMENT
9360 SUNSET DRIVE, SUITE 220
MIAMI, FLORIDA 33173
TEL. (305) 264-8100
WWW.AFCENG.COM
FBPE #3538
STORE\24-85F-MG

MG-5500 ALUMINUM WINDOW WALL SYSTEM (L.M.I.)

MR-GLASS DOORS & WINDOWS MANUFACTURING, LLC
8051 N.W. 79th Place
Medley, FL. 33166
Tel. (305) 764-3963
www.mrglasswindows.com


revisions:

| no | date | by | description |
|---|---|---|---|

date: 11-27-24
scale: 3/8" = 1"
dr. by: TARIQ
chk. by:

drawing no. 24–85F

## HEAD/SILL ANCHOR LOAD CAPACITY – PSF (WITHOUT RECEPTOR)

EXT.(+) & INT.(–)

| NOMINAL DIMS. | | ANCHOR TYPES 'A' & 'B' | | ANCHOR TYPE 'C' | |
|---|---|---|---|---|---|
| WIDTH (W) | FRAME HEIGHT | A2/B2 | A3/B3 | C2 | C3 |
| 30" | 84" | 75.0 | 75.0 | 75.0 | 75.0 |
| 36" | | 75.0 | 75.0 | 75.0 | 75.0 |
| 42" | | 75.0 | 75.0 | 75.0 | 75.0 |
| 48" | | 74.0 | 75.0 | 75.0 | 75.0 |
| 54" | | 65.8 | 75.0 | 75.0 | 75.0 |
| 60" | | 59.2 | 75.0 | 75.0 | 75.0 |
| 66" | | 53.8 | 75.0 | 72.1 | 75.0 |
| 30" | 90" | 75.0 | 75.0 | 75.0 | 75.0 |
| 36" | | 75.0 | 75.0 | 75.0 | 75.0 |
| 42" | | 75.0 | 75.0 | 75.0 | 75.0 |
| 48" | | 69.1 | 75.0 | 75.0 | 75.0 |
| 54" | | 61.4 | 75.0 | 75.0 | 75.0 |
| 60" | | 55.3 | 75.0 | 74.0 | 75.0 |
| 30" | 96" | 75.0 | 75.0 | 75.0 | 75.0 |
| 36" | | 75.0 | 75.0 | 75.0 | 75.0 |
| 42" | | 74.0 | 75.0 | 75.0 | 75.0 |
| 48" | | 64.8 | 75.0 | 75.0 | 75.0 |
| 54" | | 57.6 | 75.0 | 75.0 | 75.0 |
| 60" | | 51.8 | 75.0 | 69.4 | 75.0 |
| 30" | 102" | 75.0 | 75.0 | 75.0 | 75.0 |
| 36" | | 75.0 | 75.0 | 75.0 | 75.0 |
| 42" | | 69.6 | 75.0 | 75.0 | 75.0 |
| 48" | | 60.9 | 75.0 | 75.0 | 75.0 |
| 54" | | 54.2 | 75.0 | 72.6 | 75.0 |
| 30" | 108" | 75.0 | 75.0 | 75.0 | 75.0 |
| 36" | | 75.0 | 75.0 | 75.0 | 75.0 |
| 42" | | 65.8 | 75.0 | 75.0 | 75.0 |
| 48" | | 57.6 | 75.0 | 75.0 | 75.0 |
| 30" | 114" | 75.0 | 75.0 | 75.0 | 75.0 |
| 36" | | 72.7 | 75.0 | 75.0 | 75.0 |
| 42" | | 62.3 | 75.0 | 75.0 | 75.0 |
| 48" | | 54.5 | 75.0 | 73.1 | 75.0 |
| 30" | 120" | 75.0 | 75.0 | 75.0 | 75.0 |
| 36" | | 69.1 | 75.0 | 75.0 | 75.0 |
| 42" | | 59.2 | 75.0 | 75.0 | 75.0 |
| 48" | | 51.8 | 75.0 | 69.4 | 75.0 |

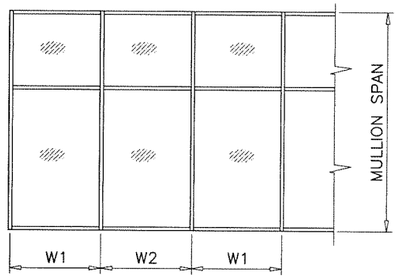


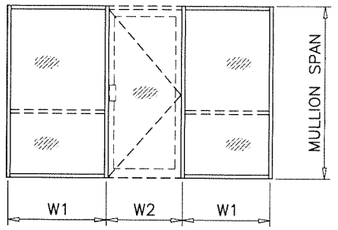


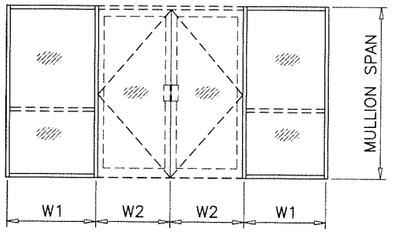


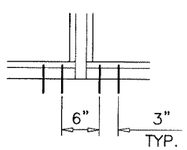


A2, B2, C2

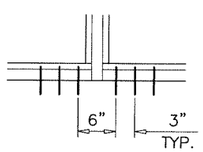


A3, B3, C3

ANCHORS TYPES: SEE SHEET 8 FOR DESCRIPTION

A2 = (2) ANCHORS TYPE 'A' AT EACH SIDE OF MULLION
A3 = (3) ANCHORS TYPE 'A' AT EACH SIDE OF MULLION

B2 = (2) ANCHORS TYPE 'B' AT EACH SIDE OF MULLION
B3 = (3) ANCHORS TYPE 'B' AT EACH SIDE OF MULLION

C2 = (2) ANCHORS TYPE 'C' AT EACH SIDE OF MULLION
C3 = (3) ANCHORS TYPE 'C' AT EACH SIDE OF MULLION

ALL OTHER ANCHORS TO BE SPACED AS PER ELEVATION.

ANCHORS

Sealed: 1/6/2025

JALAL FAROOQ LICENSE No. 81223 STATE OF FLORIDA PROFESSIONAL ENGINEER

FL #47224


AL-FAROOQ CORPORATION
ENGINEERS & PRODUCT DEVELOPMENT
9360 SUNSET DRIVE, SUITE 220
MIAMI, FLORIDA 33173
TEL. (305) 264-8100
WWW.AFCENG.COM
FBPE #3538


STORE\24-85F-MG

MG-5500 ALUMINUM WINDOW WALL SYSTEM (L.M.I.)


MR-GLASS DOORS & WINDOWS MANUFACTURING, LLC
8051 N.W. 79th Place
Medley, FL. 33166
Tel. (305) 764-3963 www.mrglasswindows.com


revisions:

| no | date | by | description |
|---|---|---|---|

date: 11-27-24
scale: 3/8" = 1"
dr. by: TARIQ
chk. by:

drawing no. 24-85F

sheet 7 of 13

## HEAD/SILL ANCHOR LOAD CAPACITY – PSF
## (WITH RECEPTOR)
EXT.(+) & INT.(–)

| NOMINAL DIMS. | | ANCHOR TYPE 'AA' & 'BB' | | | ANCHOR TYPE 'CC' | |
|---|---|---|---|---|---|---|
| WIDTH (W) | FRAME HEIGHT | AA3/BB3 | AA4/BB4 | AA5/BB5 | CC3 | CC4 |
| 30" | 84" | 75.0 | 75.0 | 75.0 | 75.0 | 75.0 |
| 36" | | 75.0 | 75.0 | 75.0 | 75.0 | 75.0 |
| 42" | | 75.0 | 75.0 | 75.0 | 75.0 | 75.0 |
| 48" | | 75.0 | 75.0 | 75.0 | 75.0 | 75.0 |
| 54" | | 68.8 | 75.0 | 75.0 | 75.0 | 75.0 |
| 60" | | 61.9 | 75.0 | 75.0 | 75.0 | 75.0 |
| 66" | | 56.3 | 75.0 | 75.0 | 72.9 | 75.0 |
| 30" | 90" | 75.0 | 75.0 | 75.0 | 75.0 | 75.0 |
| 36" | | 75.0 | 75.0 | 75.0 | 75.0 | 75.0 |
| 42" | | 75.0 | 75.0 | 75.0 | 75.0 | 75.0 |
| 48" | | 72.2 | 75.0 | 75.0 | 75.0 | 75.0 |
| 54" | | 64.2 | 75.0 | 75.0 | 75.0 | 75.0 |
| 60" | | 57.8 | 75.0 | 75.0 | 74.8 | 75.0 |
| 30" | 96" | 75.0 | 75.0 | 75.0 | 75.0 | 75.0 |
| 36" | | 75.0 | 75.0 | 75.0 | 75.0 | 75.0 |
| 42" | | 75.0 | 75.0 | 75.0 | 75.0 | 75.0 |
| 48" | | 67.7 | 75.0 | 75.0 | 75.0 | 75.0 |
| 54" | | 60.2 | 75.0 | 75.0 | 75.0 | 75.0 |
| 60" | | 54.2 | 72.2 | 75.0 | 70.2 | 75.0 |
| 30" | 102" | 75.0 | 75.0 | 75.0 | 75.0 | 75.0 |
| 36" | | 75.0 | 75.0 | 75.0 | 75.0 | 75.0 |
| 42" | | 72.8 | 75.0 | 75.0 | 75.0 | 75.0 |
| 48" | | 63.7 | 75.0 | 75.0 | 75.0 | 75.0 |
| 54" | | 56.6 | 75.0 | 75.0 | 73.4 | 75.0 |
| 30" | 108" | 75.0 | 75.0 | 75.0 | 75.0 | 75.0 |
| 36" | | 75.0 | 75.0 | 75.0 | 75.0 | 75.0 |
| 42" | | 68.8 | 75.0 | 75.0 | 75.0 | 75.0 |
| 48" | | 60.2 | 75.0 | 75.0 | 75.0 | 75.0 |
| 30" | 114" | 75.0 | 75.0 | 75.0 | 75.0 | 75.0 |
| 36" | | 75.0 | 75.0 | 75.0 | 75.0 | 75.0 |
| 42" | | 65.2 | 75.0 | 75.0 | 75.0 | 75.0 |
| 48" | | 57.0 | 75.0 | 75.0 | 73.9 | 75.0 |
| 30" | 120" | 75.0 | 75.0 | 75.0 | 75.0 | 75.0 |
| 36" | | 72.2 | 75.0 | 75.0 | 75.0 | 75.0 |
| 42" | | 61.9 | 75.0 | 75.0 | 75.0 | 75.0 |
| 48" | | 54.2 | 72.2 | 75.0 | 70.2 | 75.0 |

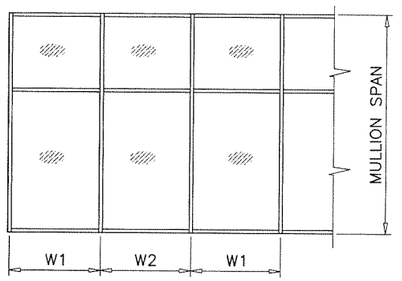


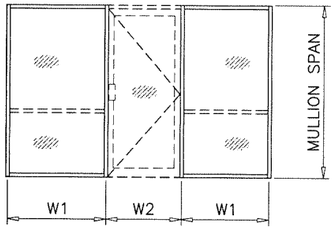


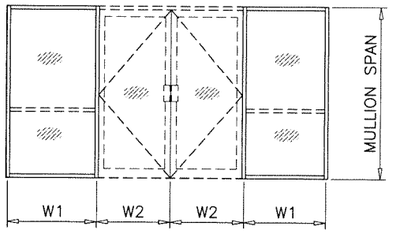


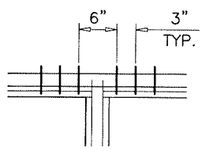


AA3, BB3, CC3

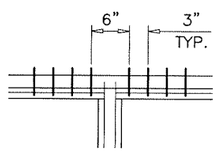


AA4, BB4, CC4

ANCHORS TYPES: SEE SHEET 10 FOR DESCRIPTION

AA3 = (3) ANCHORS TYPE 'A' AT EACH SIDE OF MULLION
AA4 = (4) ANCHORS TYPE 'A' AT EACH SIDE OF MULLION

BB3 = (3) ANCHORS TYPE 'B' AT EACH SIDE OF MULLION
BB4 = (4) ANCHORS TYPE 'B' AT EACH SIDE OF MULLION

CC3 = (3) ANCHORS TYPE 'C' AT EACH SIDE OF MULLION
CC4 = (4) ANCHORS TYPE 'C' AT EACH SIDE OF MULLION

ALL OTHER ANCHORS TO BE SPACED AS PER ELEVATION.

ANCHORS

Sealed: 1/6/2025

JALAL FAROOQ LICENSE No. 81223 STATE OF FLORIDA PROFESSIONAL ENGINEER

FL #47224


AL-FAROOQ CORPORATION
ENGINEERS & PRODUCT DEVELOPMENT
9360 SUNSET DRIVE, SUITE 220
MIAMI, FLORIDA 33173
TEL. (305) 264-8100
WWW.AFCENG.COM
FBPE #3538


STORE\24-85F-MG

MG-5500 ALUMINUM WINDOW WALL SYSTEM (L.M.I.)


MR-GLASS DOORS & WINDOWS MANUFACTURING, LLC
8051 N.W. 79th Place
Medley, FL. 33166
Tel. (305) 764-3963 www.mrglasswindows.com


revisions:

| no | date | by | description |
|---|---|---|---|

date: 11-27-24
scale: 3/8" = 1"
dr. by: TARIQ
chk. by:

drawing no. 24-85F

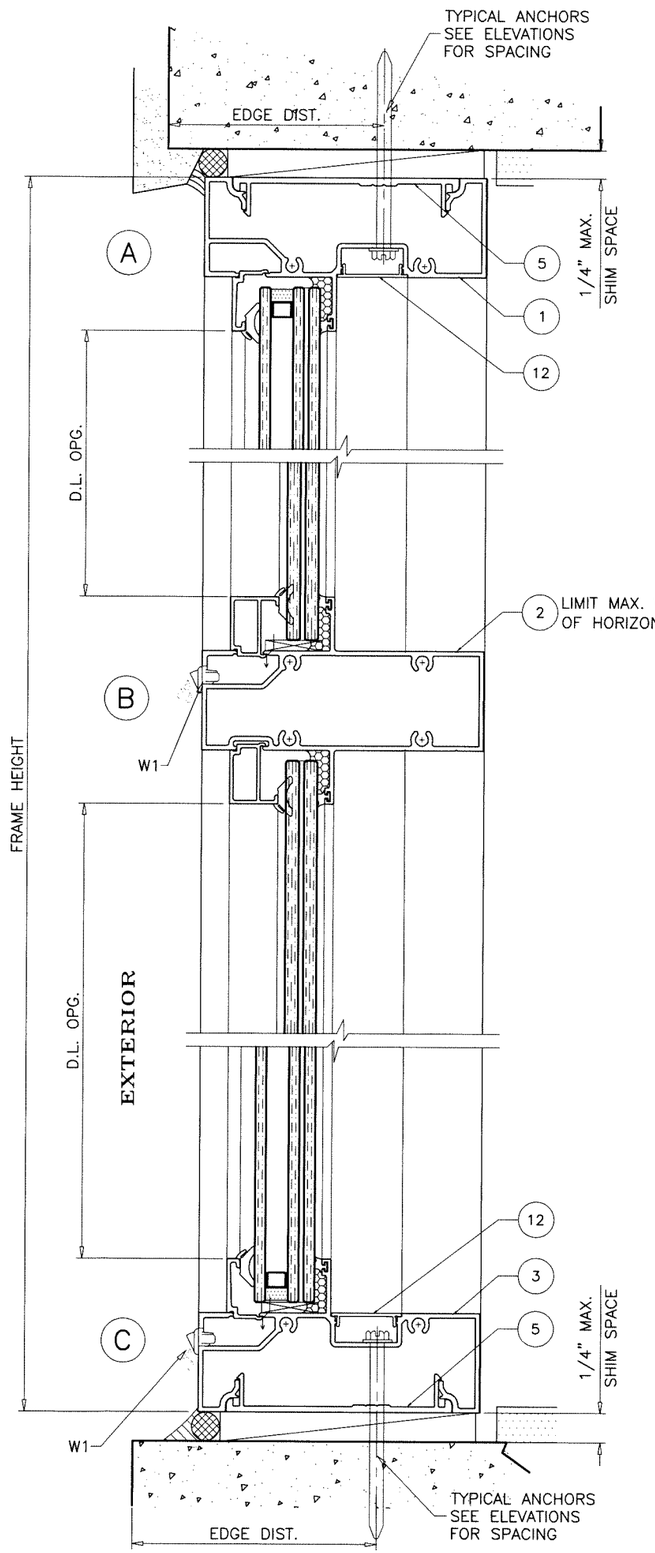


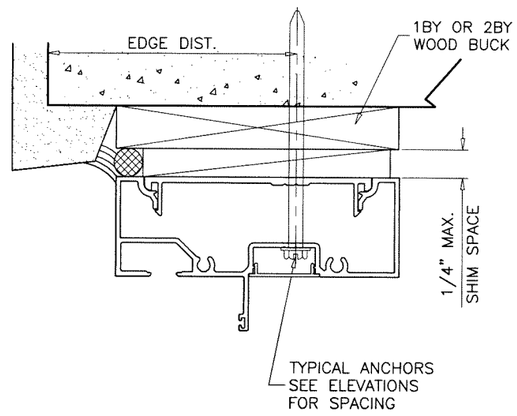


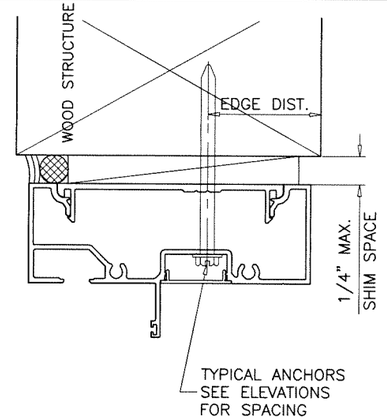


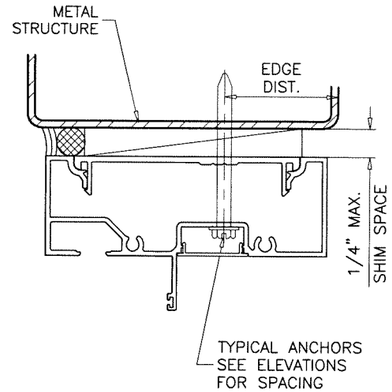


WOOD BUCKS AND METAL STRUCTURE NOT BY 'MR-GLASS' MUST SUSTAIN LOADS IMPOSED BY GLAZING SYSTEM AND TRANSFER THEM TO THE BUILDING STRUCTURE.

## TYPICAL ANCHORS W/O RECEPTORS: SEE ELEV. FOR SPACING

**TYPE 'A'–** **1/4" DIA. ULTRACON BY 'DEWALT'** (Fu=164 KSI, Fy=148 KSI)
INTO WOOD STRUCTURES
1-1/2" MIN. PENETRATION INTO WOOD (HEAD/SILL/JAMBS)
THRU 1BY OR 2BY WOOD BUCKS INTO CONC. OR BLOCKS
1-1/4" MIN. EMBED INTO CONCRETE (HEAD/SILL/JAMBS)
1-1/4" MIN. EMBED INTO GROUT FILLED BLOCKS (JAMBS)

**ANCHOR EDGE DISTANCES**
INTO CONCRETE AND BLOCKS = 2-1/2" MIN.
INTO WOOD STRUCTURE = 1" MIN.

**TYPE 'B'–** **1/4" DIA. ULTRACON BY 'DEWALT'** (Fu=164 KSI, Fy=148 KSI)
DIRECTLY INTO CONCRETE OR BLOCKS
1-3/4" MIN. EMBED INTO CONCRETE (HEAD/SILL/JAMBS)
1-3/4" MIN. EMBED INTO GROUT FILLED BLOCKS (JAMBS)

**ANCHOR EDGE DISTANCES**
INTO CONCRETE AND BLOCKS = 2-1/2" MIN.

**TYPE 'C'–** **1/4" DIA. SMS OR SELF-DRILLING SCREWS** (GRADE 2 CRS)
INTO F.B.C. APPROVED MULLIONS
AND
INTO METAL STRUCTURES (HEAD/SILL/JAMBS)
(3) THREADS MIN. TO EXTEND BEYOND METAL THICKNESS
ALUMINUM: 1/8" THK. MIN. (6063-T5 MIN.)
STEEL: 1/8" THK. MIN. (Fy = 36 KSI MIN.)
(STEEL IN CONTACT WITH ALUMINUM TO BE PLATED OR PAINTED)

**ANCHOR EDGE DISTANCES**
INTO METAL STRUCTURE = 3/4" MIN.

**WOOD AT HEAD, SILL OR JAMBS SG = 0.55 MIN.**
**CONCRETE AT HEAD, SILL OR JAMBS f'c = 3000 PSI MIN.**
**C-90 HOLLOW/FILLED BLOCK AT JAMBS f'm = 2000 PSI MIN.**

## WEEPHOLES:

W1 = 5/16" X 1-3/4" LONG WEEP SLOTS WITH PLASTIC BAFFLE
(2) PER LITE AT 3-1/2" FROM EACH END.

Sealed: 1/6/2025

JALAL FAROOQ LICENSE No. 81223 STATE OF FLORIDA PROFESSIONAL ENGINEER

FL #47224


AL-FAROOQ CORPORATION
ENGINEERS & PRODUCT DEVELOPMENT
9360 SUNSET DRIVE, SUITE 220
MIAMI, FLORIDA 33173
TEL. (305) 264-8100
WWW.AFCENG.COM
FBPE #3538
STORE\24-85F-MG


MG-5500 ALUMINUM WINDOW WALL SYSTEM (L.M.I.)


MR-GLASS DOORS & WINDOWS MANUFACTURING, LLC
8051 N.W. 79th Place
Medley, FL. 33166
Tel. (305) 764-3963
www.mrglasswindows.com


revisions:

| no | date | by | description |
|---|---|---|---|
| | | | |

date: 11-27-24
scale: 3/8" = 1"
dr. by: TARIQ
chk. by:

drawing no. 24-85F

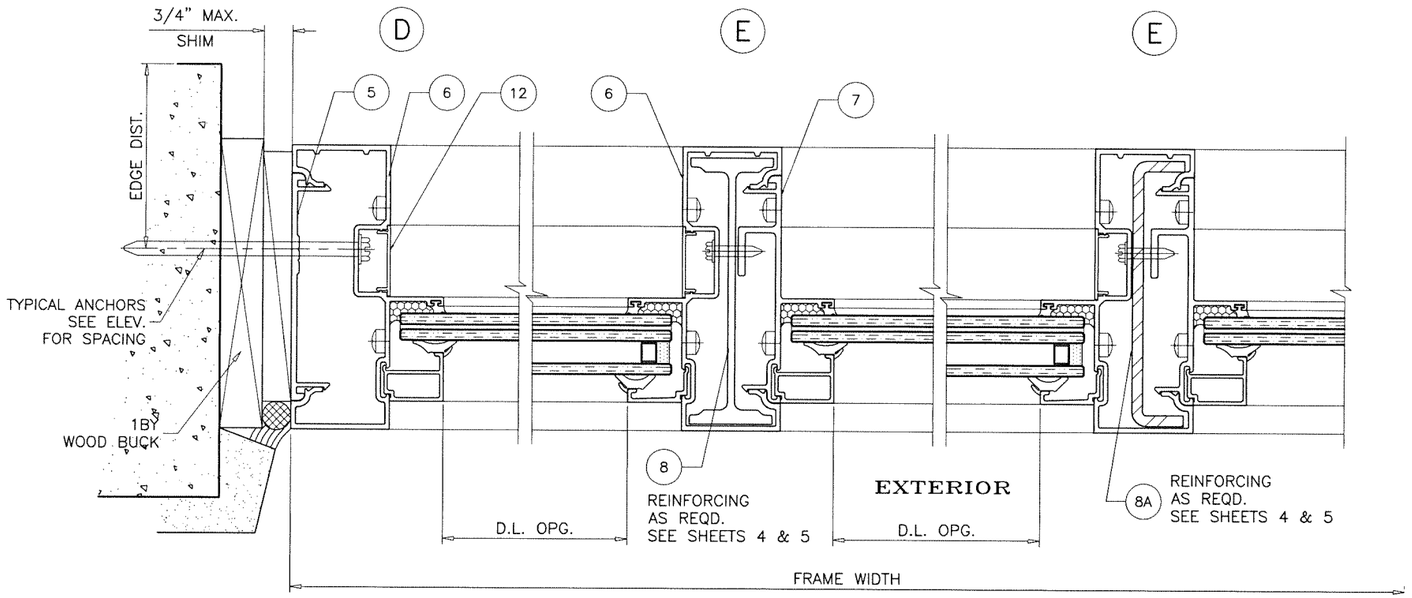


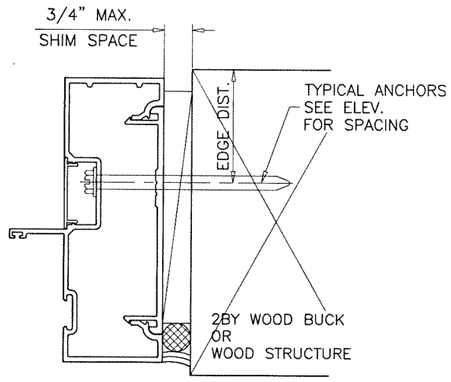


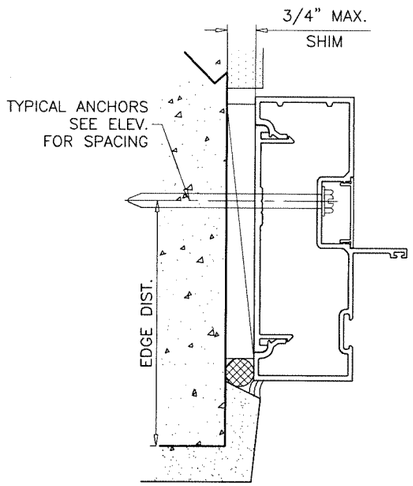


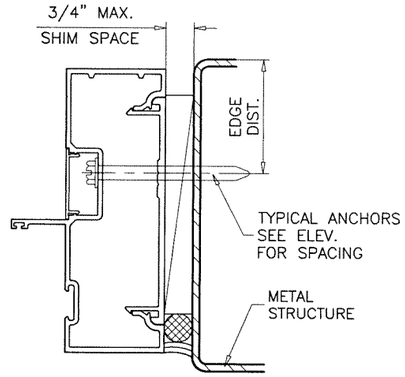


Sealed: 1/6/2025

FL #47224

JALAL FAROOQ LICENSE No. 81223 STATE OF FLORIDA PROFESSIONAL ENGINEER

AL-FAROOQ CORPORATION
ENGINEERS & PRODUCT DEVELOPMENT
9360 SUNSET DRIVE, SUITE 220
MIAMI, FLORIDA 33173
TEL. (305) 264-8100
WWW.AFCENG.COM
FBPE #3538
STORE\24-85F-MG

MG-5500 ALUMINUM WINDOW WALL SYSTEM (L.M.I.)

MR-GLASS DOORS & WINDOWS MANUFACTURING, LLC
8051 N.W. 79th Place
Medley, FL. 33166
Tel. (305) 764-3963 www.mrglasswindows.com

| revisions: | | | |
|---|---|---|---|
| no | date | by | description |

date: 11-27-24
scale: 3/8" = 1"
dr. by: TARIQ
chk. by:

drawing no.
24-85F

sheet 9 of 13

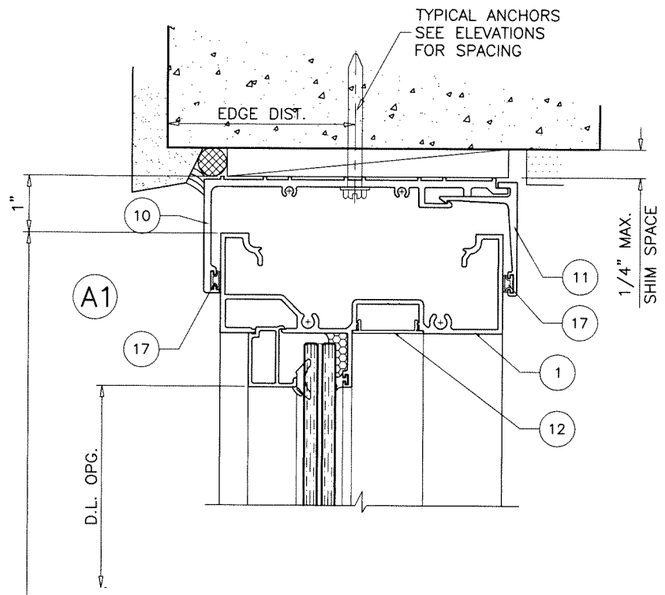


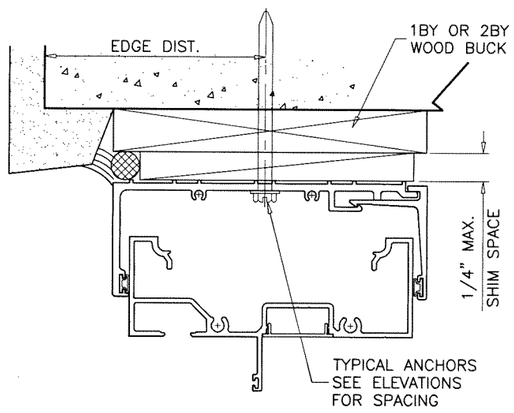


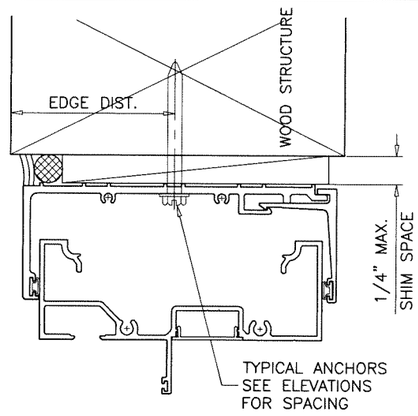


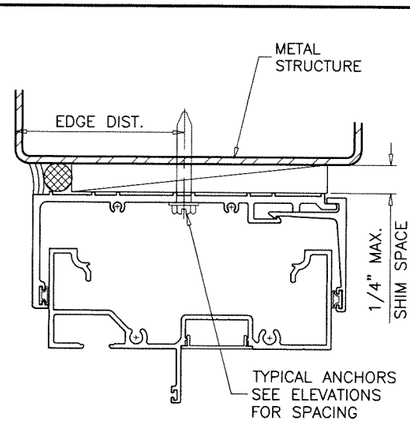


WOOD BUCKS AND METAL STRUCTURE NOT BY 'MR-GLASS' MUST SUSTAIN LOADS IMPOSED BY GLAZING SYSTEM AND TRANSFER THEM TO THE BUILDING STRUCTURE.

NOTE:
SEALANT APPLICATION AT HEAD AND JAMB RECEPTORS TO BE DETERMINED ON CASE BY CASE PROJECT DEPENDING ON THE APPLICATION.

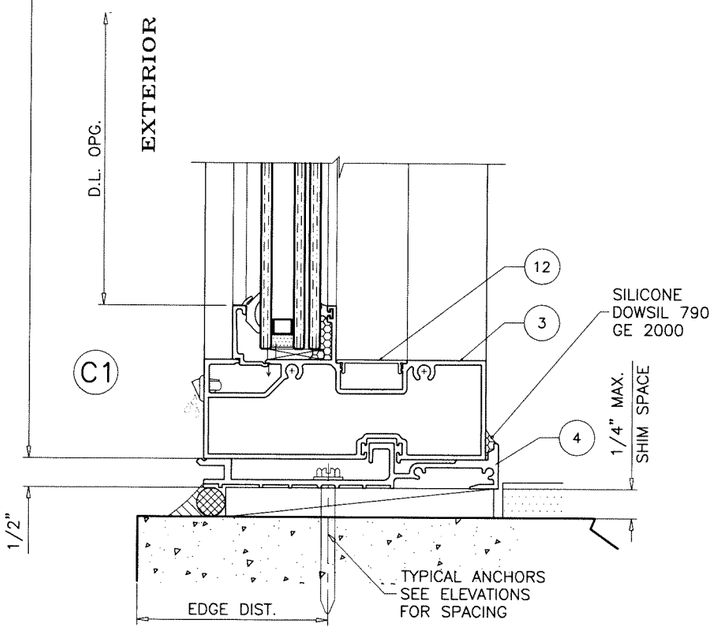


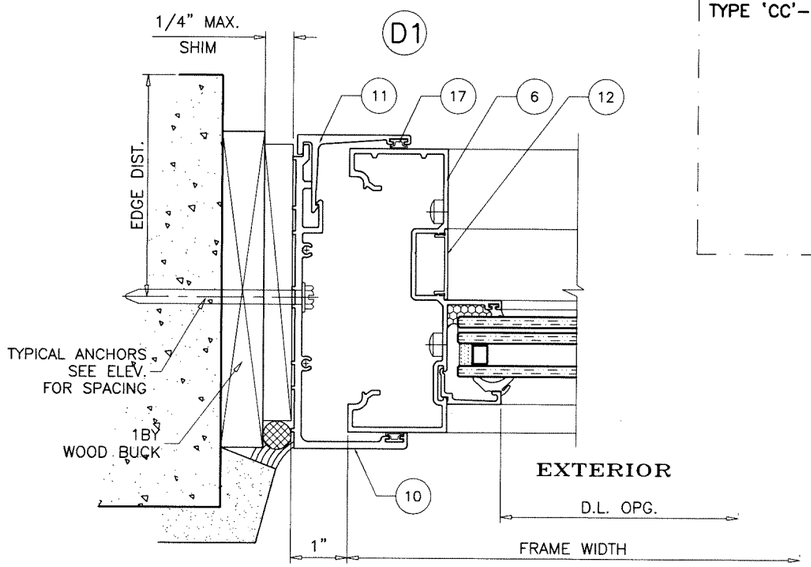


TYPICAL ANCHORS WITH RECEPTORS: SEE ELEV. FOR SPACING

TYPE 'AA'– 5/16" DIA. ULTRACON BY 'DEWALT' (Fu=177 KSI, Fy=155 KSI)
INTO WOOD STRUCTURES
1-7/8" MIN. PENETRATION INTO WOOD (HEAD/SILL/JAMBS)
THRU 1BY OR 2BY WOOD BUCKS INTO CONC. OR BLOCKS
1-1/2" MIN. EMBED INTO CONCRETE (HEAD/SILL/JAMBS)
1-1/2" MIN. EMBED INTO GROUT FILLED BLOCKS (JAMBS)

ANCHOR EDGE DISTANCES
INTO CONCRETE AND BLOCKS = 2-1/2" MIN.
INTO WOOD STRUCTURE = 1" MIN.

TYPE 'BB'– 5/16" DIA. ULTRACON BY 'DEWALT' (Fu=177 KSI, Fy=155 KSI)
DIRECTLY INTO CONCRETE OR BLOCKS
2" MIN. EMBED INTO CONCRETE (HEAD/SILL/JAMBS)
2" MIN. EMBED INTO GROUT FILLED BLOCKS (JAMBS)

ANCHOR EDGE DISTANCES
INTO CONCRETE AND BLOCKS = 3-1/8" MIN.

TYPE 'CC'– 5/16" DIA. SMS OR SELF-DRILLING SCREWS (GRADE 2 CRS)
INTO F.B.C. APPROVED MULLIONS
AND
INTO METAL STRUCTURES (HEAD/SILL/JAMBS)
(3) THREADS MIN. TO EXTEND BEYOND METAL THICKNESS
ALUMINUM: 1/8" THK. MIN. (6063-T5 MIN.)
STEEL: 1/8" THK. MIN. (Fy = 36 KSI MIN.)
(STEEL IN CONTACT WITH ALUMINUM TO BE PLATED OR PAINTED)

ANCHOR EDGE DISTANCES
INTO METAL STRUCTURE = 3/4" MIN.

**WOOD AT HEAD, SILL OR JAMBS SG = 0.55 MIN.**
**CONCRETE AT HEAD, SILL OR JAMBS f'c = 3000 PSI MIN.**
**C-90 HOLLOW/FILLED BLOCK AT JAMBS f'm = 2000 PSI MIN.**

Sealed: 1/6/2025

JALAL FAROOQ LICENSE No. 61223 STATE OF FLORIDA PROFESSIONAL ENGINEER

FL #47224


**AL-FAROOQ CORPORATION**
ENGINEERS & PRODUCT DEVELOPMENT
9360 SUNSET DRIVE, SUITE 220
MIAMI, FLORIDA 33173
TEL. (305) 264-8100
WWW.AFCENG.COM
*FBPE #3538*


STORE\24-85F-MG

MG-5500 ALUMINUM WINDOW WALL SYSTEM (L.M.I.)

**MR-GLASS DOORS & WINDOWS MANUFACTURING, LLC**
8051 N.W. 79th Place
Medley, FL. 33166
Tel. (305) 764-3963 www.mrglasswindows.com

| revisions: | | | |
|---|---|---|---|
| no | date | by | description |

date: 11-27-24
scale: 3/8" = 1"
dr. by: TARIQ
chk. by:

drawing no. 24-85F

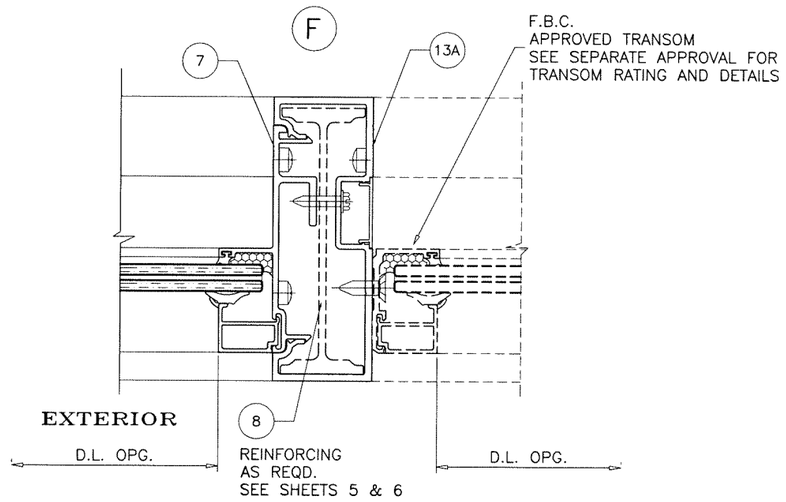


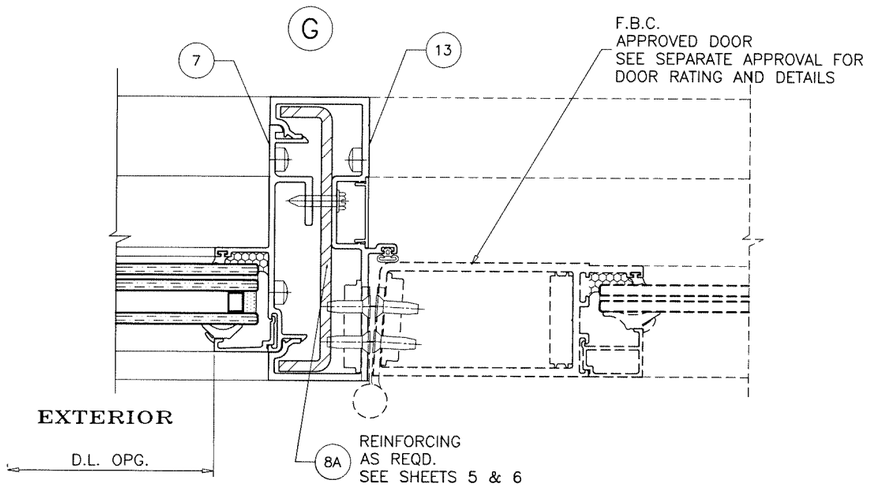


Sealed: 1/6/2025

JALAL FAROOQ
LICENSE
No. 81223
STATE OF FLORIDA
PROFESSIONAL ENGINEER

FL #47224


AL-FAROOQ CORPORATION
ENGINEERS & PRODUCT DEVELOPMENT
9360 SUNSET DRIVE, SUITE 220
MIAMI, FLORIDA 33173
TEL. (305) 264-8100
WWW.AFCENG.COM
FBPE #3538


STORE\24-85F-MG

MG-5500 ALUMINUM WINDOW WALL SYSTEM (L.M.I.)


MR-GLASS DOORS & WINDOWS MANUFACTURING, LLC
8051 N.W. 79th Place
Medley, FL. 33166
Tel. (305) 764-3963 www.mrglasswindows.com


revisions:

| no | date | by | description |
|---|---|---|---|

date: 11-27-24
scale: 3/8" = 1"
dr. by: TARIQ
chk. by:

drawing no. 24-85F

sheet 11 of 13

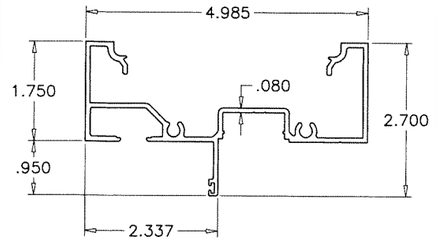


1 FRAME HEAD/SILL
5504

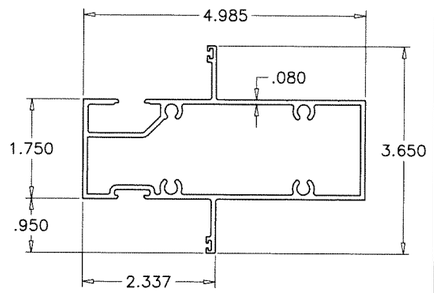


2 INTERMEDIATE HORIZONTAL
5505

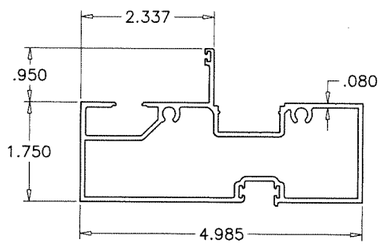


3 FRAME SILL
5506

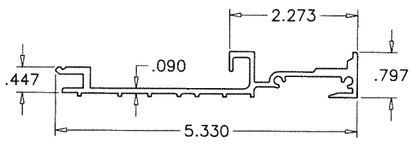


4 SILL PAN
5509

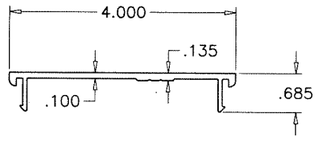


5 SNAP COVER
5508

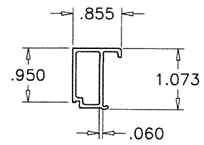


9 GLASS STOP
9001

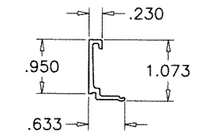


9A GLASS STOP
9002

| ITEM NO. | PART NUMBER | QUANTITY | DESCRIPTION | MATERIAL | MANF./SUPPLIER/REMARKS |
|---|---|---|---|---|---|
| 1 | 5504 | – | FRAME HEAD/SILL | 6063–T6 | – |
| 2 | 5505 | – | INTERMEDIATE HORIZONTAL | 6063–T6 | – |
| 3 | 5506 | – | FRAME SILL | 6063–T6 | – |
| 4 | 5509 | – | SILL PAN | 6063–T6 | – |
| 5 | 5508 | – | SNAP COVER | 6063–T6 | – |
| 6 | 5501 | – | JAMB/MULLION | 6063–T6 | – |
| 7 | 5503 | – | MULLION SNAP | 6063–T6 | – |
| 8 | 5513 | – | MULLION REINFORCING | 6063–T6 | – |
| 8A | – | – | MULLION REINFORCING | STEEL | A36, Fu MIN. = 58 KSI |
| 9 | 9001 | – | GLASS STOP (LAM. GLASS) | 6063–T6 | – |
| 9A | 9002 | – | GLASS STOP (INSUL. LAM. GLASS) | 6063–T6 | – |
| 10 | 5510 | – | HEAD/JAMB RECEPTOR (EXTERIOR) | 6063–T6 | – |
| 11 | 5511 | – | HEAD/JAMB RECEPTOR (INTERIOR) | 6063–T6 | – |
| 12 | 5512 | – | FRAME COVER | 6063–T6 | – |
| 13 & 13A | 5521 | – | DOOR MULLION | 6063–T6 | – |
| 14 | G30–01 | AS REQD. | INTERIOR GLAZING GASKET | EPDM | DUROMETER 70±5 SHORE A |
| 15 | G10–04 | AS REQD. | EXTERIOR GLAZING GASKET | EPDM | DUROMETER 70±5 SHORE A |
| 16 | – | 2/ LITE | SETTING BLOCK, 1/8" X 1" X 4" LONG, AT 3" FROM EACH END | EPDM | DUROMETER 80±5 SHORE A |
| 17 | G60–03 | AS REQD. | RECEPTOR GASKET | EPDM | DUROMETER 70±5 SHORE A |
| 18 | 1/4–20 X 2" | 2/ CORNER | ASSEMBLY SCREWS (PH SELF DRILLING TYPE F) | – | GRADE 4 CRS, Fu=92 KSI, FY=120 KSI |
| 19 | – | AS REQD. | DRAIN VALVE | PVC | – |
| 20 | – | – | – | – | – |

## SEALANTS:

ALL FRAME CORNERS, JOINTS, MULLION SEAMS AND PERIMETER OF GLAZING BEAD TO FRAME TO BE SEALED WITH GE 2000 SILICONE.

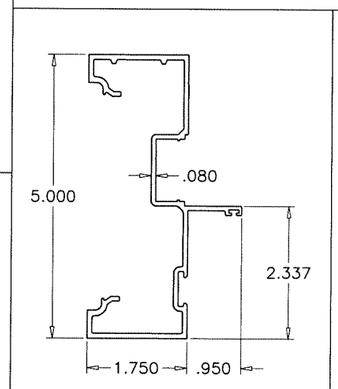


6 JAMB/MULLION
5501

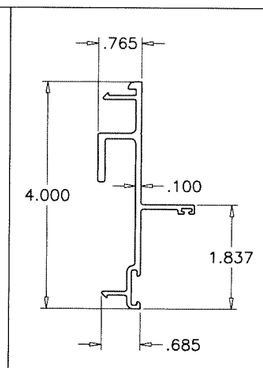


7 MULLION SNAP
5503

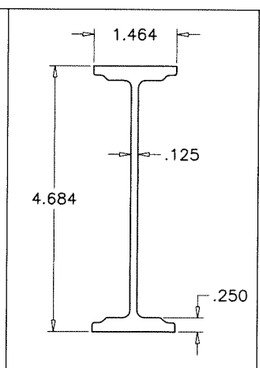


8 MULLION REINF.
5513

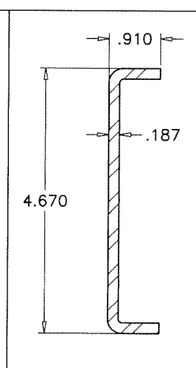


8A MULLION REINF.
–

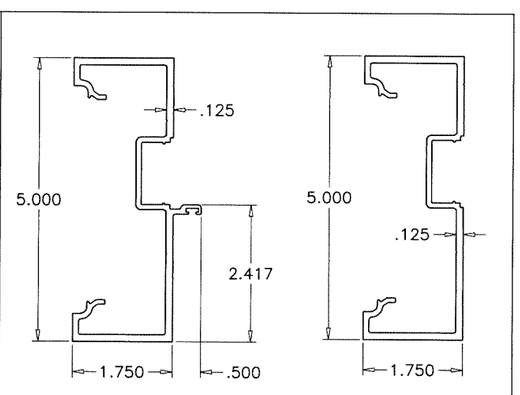


13 DOOR MULLION
5521 13A

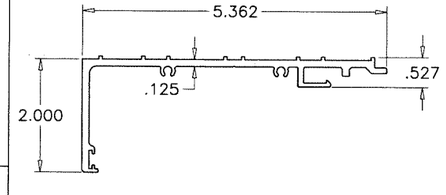


10 HEAD/JAMB RECEPTOR (EXT.)
5510

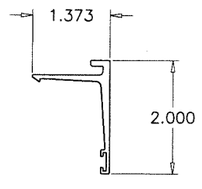


11 HEAD/JAMB RECEPTOR (INT.)
5511

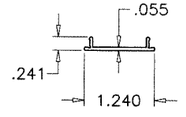


12 FRAME COVER
5512

Sealed: 1/6/2025

JALAL FAROOQ LICENSE No. 81223 STATE OF FLORIDA PROFESSIONAL ENGINEER

FL #47224


AL-FAROOQ CORPORATION
ENGINEERS & PRODUCT DEVELOPMENT
9360 SUNSET DRIVE, SUITE 220
MIAMI, FLORIDA 33173
TEL. (305) 264-8100
WWW.AFCENG.COM
FBPE #3538


STORE\24-85F-MG

MG-5500 ALUMINUM WINDOW WALL SYSTEM (L.M.I.)


MR-GLASS DOORS & WINDOWS MANUFACTURING, LLC
8051 N.W. 79th Place
Medley, FL. 33166
Tel. (305) 764-3963 www.mrglasswindows.com


revisions:

| no | date | by | description |
|---|---|---|---|

date: 11-27-24
scale: 3/8" = 1"
dr. by: TARIQ
chk. by:

drawing no. 24–85F

sheet 12 of 13

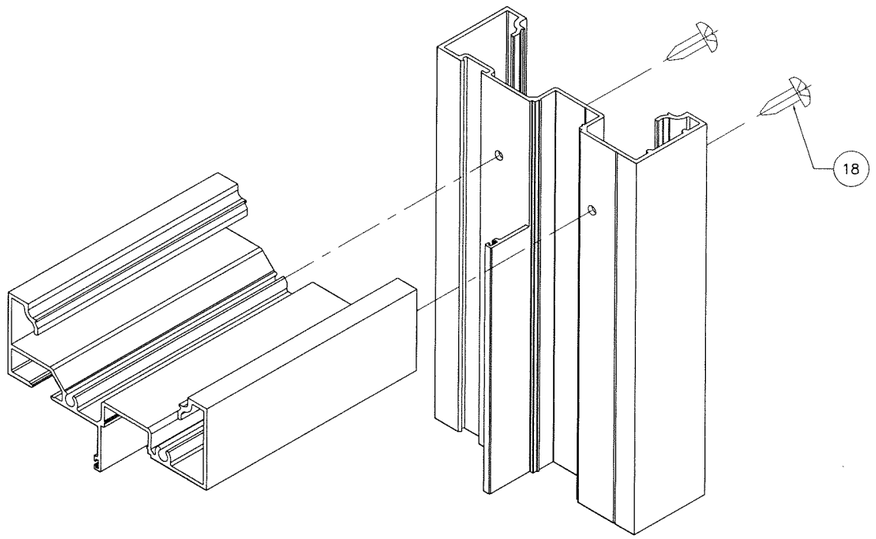


FRAME TOP/BOTTOM CORNER

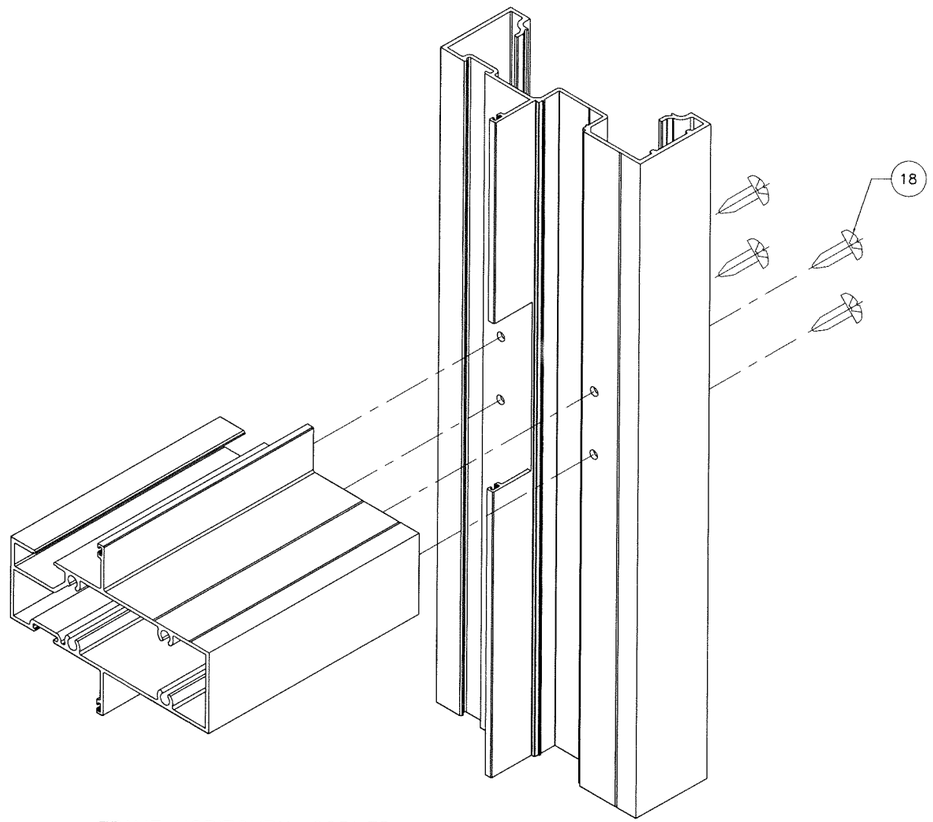


FRAME HORIZONTAL CORNER

Sealed: 1/6/2025

FL #47224

JALAL FAROOQ LICENSE No. 81223 STATE OF FLORIDA PROFESSIONAL ENGINEER


AL-FAROOQ CORPORATION
ENGINEERS & PRODUCT DEVELOPMENT
9360 SUNSET DRIVE, SUITE 220
MIAMI, FLORIDA 33173
TEL. (305) 264-8100 WWW.AFCENG.COM
FBPE #3538


STORE\24-85F-MG

MG-5500 ALUMINUM WINDOW WALL SYSTEM (L.M.I.)


MR-GLASS DOORS & WINDOWS MANUFACTURING, LLC
8051 N.W. 79th Place
Medley, FL. 33166
Tel. (305) 764-3963 www.mrglasswindows.com


revisions:

| no | date | by | description |
|---|---|---|---|
| | | | |

date: 11-27-24
scale: 3/8" = 1"
dr. by: TARIQ
chk. by:

drawing no. 24-85F

sheet 13 of 13