ENGINEERING EXPRESS®

ENGINEERINGEXPRESS.COM | (954) 354-0660
POSTAL ADDRESS:
2234 NORTH FEDERAL HWY #7664
BOCA RATON, FL 33431

Performance Evaluation

Florida Statewide Product Approval (FSA) # FL 47101.4
Engineering Express Project # 26-102106
THIS DOCUMENT CONTAINS (6) PAGES.

EVALUATION SUBJECT: **TGM/CLASSIC/MIDEA LIGHT COMMERCIAL UNITS** FL # 47101.4

REPORT HOLDER:
REFRICENTER OF MIAMI, INC.
7101 NW 43RD STREET
MIAMI, FL, 33166, USA
(786) 363-5755 | REFRICENTER.NET

NOTE: THE GRAPHICAL DEPICTIONS IN THIS EVALUATION ARE FOR ILLUSTRATIVE PURPOSES ONLY AND MAY DIFFER IN APPEARANCE.

SCOPE OF EVALUATION (compliance with the following codes):

THIS IS A STRUCTURAL (WIND) PERFORMANCE EVALUATION ONLY. NO ELECTRICAL OR TEMPERATURE PERFORMANCE RATINGS OR CERTIFICATIONS ARE OFFERED OR IMPLIED HEREIN.
UNDER NO CIRCUMSTANCE DOES THIS PERFORMANCE EVALUATION GUARANTEE, IMPLY, OR STATE PERFORMANCE OF THE UNIT IS MAINTAINED DURING OR AFTER A DESIGN EVENT.

This Performance Evaluation is being issued in accordance with the requirements of the **Florida Building Code Ninth Edition (2026)** per ASCE 7, FBC Building Ch. 16, FBC Building Sections 104.11 & 1522.2, FBC Existing Building Sections 707.1 & 707.2, FBC Mechanical 301.15, FBC Residential M1202.1 & M1301.1, and FS 471.025. The product noted in this performance evaluation has been tested and/or evaluated as summarized herein.

SUBSTANTIATING DATA:
• Product Evaluation Documents
Substantiating documentation has been submitted to provide this performance evaluation and is summarized in the sections below.
• Structural Engineering Calculations
Structural engineering calculations have been prepared which evaluate the product based on comparative and/or rational analysis to qualify the following design criteria:

- Max. allowable (ASD) lateral & uplift wind pressures certified herein
- Max. allowable sliding forces, uplift forces, & overturning moments (see Unit Reactions from Wind Guide on last page)
- Tie-down configuration and anchor capacity for concrete, aluminum, and steel host substrates (host by others).
- Unit panel wind pressure connection integrity

Calculation summary is included in this product evaluation and appears herein.

LIMITATIONS & CONDITIONS OF USE:
Use of the product(s) listed herein shall be in strict accordance with this product evaluation as noted herein and manufacturer-provided model specifications. Installation shall conform to the minimum standards stated in the referenced building code(s) in addition to the specifications and limitations stated herein. See herein for complete limitations & conditions of use.

OPTIONS:
This evaluation is valid for the models described herein. The critical unit designs have been determined and used in this evaluation. Any structural changes outside of the design as described herein would void this certification.

UNIT CASING MATERIALS:
Exterior panels and integrated feet/legs shall be constructed of UTS = 45 ksi min. galv. steel. Exterior panels shall be 22 GA min. thick. Unit integrated feet shall be 20 GA min. thick. Exterior panels shall be secured with #8 (0.164") min. Ø, SAE Gr. 2 min. or SS sheet metal screws. Contact Report Holder for further unit construction information.

TERMINOLOGY:
See herein for definitions of terms and abbreviations used in this evaluation.

STRUCTURAL PERFORMANCE:
Models referenced herein are subject to the following design limitations:

Maximum-Rated ASD Wind Pressures*:
± 140 psf Lateral, 111 psf Uplift

- Required design wind pressures shall be determined according to the guide provided in the Appendix (see last page of this document) or on a site-specific basis in accordance with ASCE 7 and applicable sections of the building code(s) being referenced in accordance with ASD methodology.
- Required design wind pressures shall be less than or equal to the maximum pressures listed herein.
- *Maximum Rated Wind Pressures indicate the maximum pressures that all units listed herein are approved for. Valid for at-grade, wall-mounted, and rooftop applications. See limitations herein.
- Valid for use inside and outside the High-Velocity Hurricane Zone (HVHZ).
- Site-specific wind analysis may produce alternate limitations provided that the maximum-rated wind pressures stated herein are not exceeded.

VISIT ECALC.IO/REFRICENTER
FOR MORE INFORMATION AND DEVIATIONS TO THIS EVALUATION OR SCAN THE QR CODE TO THE RIGHT >

Engineer Signature & Seal:

COLBY BENNARDO LICENSE No 95197 STATE OF FLORIDA PROFESSIONAL ENGINEER

Digitally signed by Colby Bennardo
Date: 2026.08.17 13:39:22 -04'00'

August 17, 2026

Colby Bennardo, P.E.
ENGINEERING EXPRESS®
FL PE #95197 FLCA #9885

*PRINTED COPIES OF THIS DOCUMENT ARE NOT CONSIDERED SIGNED & SEALED. SIGNATURE MUST BE VERIFIED ON ANY ELECTRONIC COPIES.
***FOR FLORIDA STATEWIDE PRODUCT APPROVALS (FSAs) REGISTERED & APPROVED WITH THE STATE OF FLORIDA:** ORIGINAL, SEALED COPIES OF APPROVED FLORIDA PRODUCT APPROVALS ARE NOT REQUIRED FOR PERMIT. SEE **ECALC.IO/SEAL** TO LEARN MORE.

MODEL INFORMATION

Cab. Group	Max Unit Dimensions (in)		
	Width	Depth	Height
Small Kit	41	20	34
Large Kit	41	20	56

MODEL INFORMATION NOTES

The model information listed herein is based on information provided by the client. Unit dimensions listed above are unit net dimensions (as opposed to gross/packing/shipping dimensions). Cabinet Groups (abbreviated in the tables above as "Cab. Groups") are designated by Engineering Express based on the unit cabinet and panel layout. See Details 1-2 for definitions of unit dimensions and Cabinet Groups. Unit appearance may vary. Unit net weights (as opposed to gross/packing/shipping weights) shall be as follows:

- Small Kit: between 40 lb and 200 lb, typ;
- Large Kit: between 175 lb and 275 lb, typ

Please contact Report Holder for more information.

Model Directive: The installer or end-user of this document shall verify the unit dimensions of the model(s) for installation separately. The installer/end-user shall match the model's size to one of the Cabinet Group sizes shown above, and shall follow the corresponding Cabinet Group's specifications listed in the report. Unit dimensions must satisfy the sizes listed; contact Engineering Express if the unit model size does not satisfy one of the listed. Model numbers may vary. "

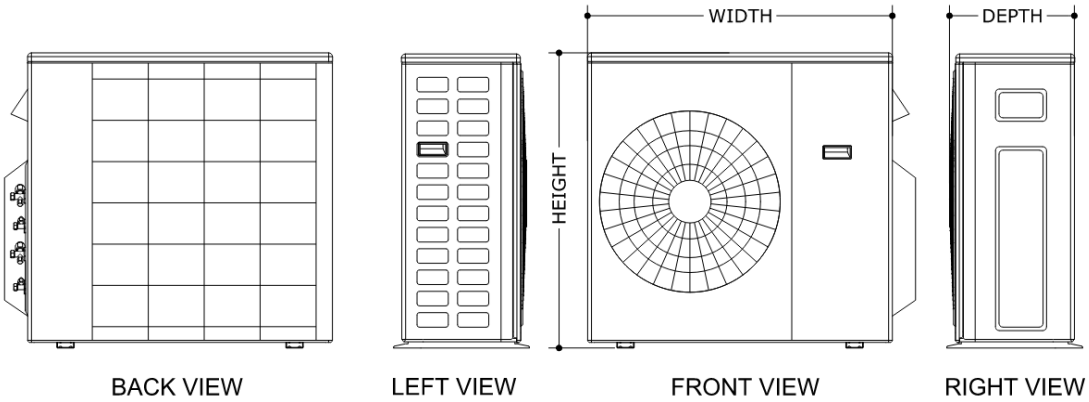

1 SMALL KIT UNITS
SCALE: NTS UNIT SIDE VIEWS

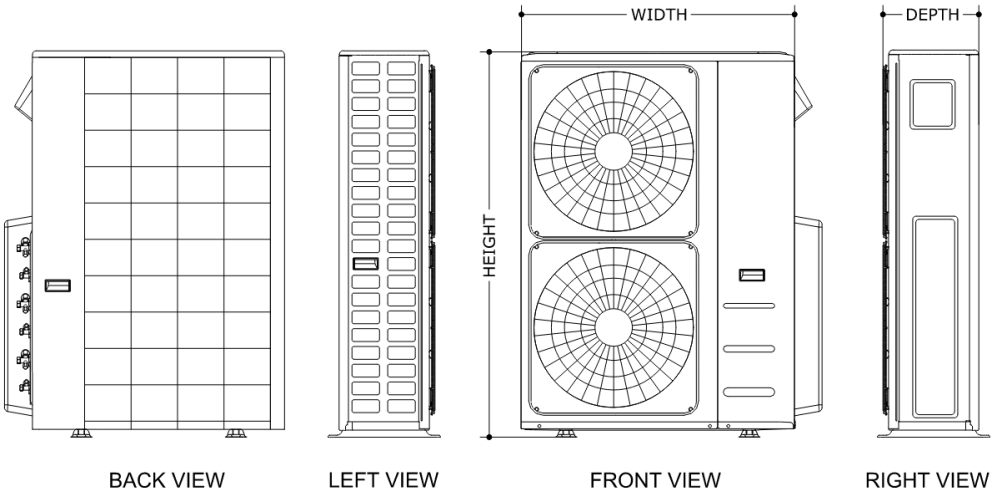

2 LARGE KIT UNITS
SCALE: NTS UNIT SIDE VIEWS

DESIGN NOTES:

The following notes are applicable for at-grade (ground) and rooftop installations U.N.O.:

1. "Mechanical Unit" or "Unit" where used herein refers to either of the listed Cabinet Sizes specified herein. See the "Model Information" section prior for required specifications and approved unit sizes.

2. "Integrated feet" where used herein: see "Unit Casing Materials" section on page 1 herein for the required minimum specifications.

3. "Tie-Down Strap" or "Strap" where used herein: Each strap shall be 1" min. wide x 22 GA min. thick, UTS = 45 ksi min. (equivalent to ASTM A653 Gr. 33 or stronger) galv. steel, typ. Tie-down clips shall be 1" min. wide, 6"-10" tall, 0.068" min. thick, ASTM A653 Gr 33 or stronger galv. steel (Miami Tech CUTD per FL19731.2)

4. Tie-down strap lengths shall be determined by the installing contractor. Ensure strap lengths are such that the strap is neither excessively taut nor excessively slack once installed. A secure fit should be achieved. Straps shall be positioned at 6" minimum from any unit edge.

5. "Host Concrete" where used herein: host concrete shall have f'c = 3,000 psi min. compressive strength and shall be regular-weight, uncracked concrete. Host concrete shall be by others.

6. "Stand Rails" or "Existing Rails" where used herein: host stand rails shall be 12GA (0.098") min. thick, UTS = 58 ksi min. (equivalent to ASTM A36 or stronger) galv. steel OR 0.09" min. thick, 6061-T6 aluminum, typ. Stand rails shall be by others, typ. Performance of the stand rails as structural members to support the unit assembly shall be per separate certification.

7. "Sheet Metal Screws" or "SMS" where used herein: screws shall be SAE Gr. 2 min. or SS self-drilling screws with washers, typ.

8. "Thru-Bolt" where used herein: bolt shall be UNC SAE Gr. 5 min. with STD SAE Washers at the top and bottom of the connection (under the bolt head and above the locking nut), and SAE Gr. 5 min. locking nut at the underside of the connection, typ. See the thru-bolt diagram on the second-to-last page of this report.

9. For all fasteners specified herein: provide 3x diameter minimum spacing and 1.5x diameter minimum edge distance for all steel-to-steel and steel-to-aluminum connections, typ. Provide 2.5x diameter minimum spacing and 1.5x diameter minimum edge distance for all aluminum-to-aluminum connections.

10. Refer to fastener manufacturer's published data sheets and recommendations for fastener installation instructions. Fasteners shall be cadmium-plated or otherwise corrosion-resistant material and shall comply with "Specifications for Aluminum Structures" Section J.3.7.2 by the Aluminum Association Inc., and any applicable federal, state, and/or local codes.

11. Aluminum welding shall be performed in accordance with FBC section 2003.8.1 with weld filler alloys meeting ANSI/AWS A5.10 standards to achieve ultimate design strength in accordance with the aluminum design manual, table J.2.1. suggested weld filler: 5356 electrodes. all aluminum construction shall be in conformance with the tolerances, quality and methods of construction as set forth in FBC section 2003.2 and the American Welding Society's structural welding code-aluminum (D1.2). Minimum weld is 1/8" throat full perimeter fillet weld unless otherwise noted.

12. All steel welding must be done by an AWS certified welder or shall conform to the current edition of the AISC steel construction manual as inspected and verified by others. Min. Weld is 1/8" full perimeter fillet weld (U.N.O.). Weld electrodes shall be E70XX for carbon steel. For stainless steel, weld electrodes shall follow ASTM E330-16 and American Welding Society specification AWS A5.4. All welds not otherwise identified shall be continuous. Welds shall have evidence of uniform section, smoothness of weld metal, free from slag, and adequate strength and durability.

13. Contact Engineering Express for site scenarios outside the bounds of this evaluation.

14. Alternate/equivalent anchors may be used in place of the listed anchors herein so long as all of the below conditions are satisfied and are subject to the approval of the Authority Having Jurisdiction:
    a. The equivalent anchor is demonstrated to have allowable (ASD) tension and shear capacities equal to or greater than the listed anchor's allowable tension and shear capacities as verified by a Design Professional.
    b. All necessary reductions in capacity for edge distance, spacing, and other requirements as noted by the anchor manufacturer are considered in determining the equivalent anchor's tension and shear capacities.
    c. The alternate anchor is of equal or greater diameter than the listed anchor and is provided with the same minimum edge distance, spacing, and any other specifications as are required for the listed anchor; AND
    d. Anchor equivalents shall follow all requirements specified in this report in addition to the governing code(s) and allowable stress design (ASD) methodology.

    Contact Engineering Express to add additional anchoring options to this report, or to certify an anchor option for special site-specific conditions needed for a particular site installation.

15. The contractor is responsible for insulating all members from dissimilar materials to prevent electrolysis.

16. Water-tightness of the existing host substrate/structure shall be the full responsibility of the installing contractor. Contractor shall ensure that any removed or altered waterproofing membrane is restored after fabrication and installation of the structure evaluated herein. This engineer shall not be responsible for any waterproofing or leakage issues which may occur as water-tightness shall be the full responsibility of the installing contractor.

17. Large and small missile impact are not covered in this certification and shall be approved through a separate submittal if required. Interior mechanisms and/or electrical circuitry are outside the scope of this performance evaluation. Electrical ground, when required, to be designed & installed by others. All mechanical specifications (clear space, tonnage, etc.) shall be as per manufacturer recommendations and are the express responsibility of the contractor.

18. Alterations, additions, or other markings to this document are not permitted and invalidate this certification. Dimensions are shown to illustrate design forces and other design criteria. They may vary slightly but must remain within the limitations specified herein. Work shall be field-verified by others.

19. Engineering Express shall be notified and given an opportunity to reevaluate our work upon discovery of any inaccurate information prior to modification of existing field conditions and fabrication and installation of materials.

20. The products and/or systems detailed herein are generic and do not provide information for a specific site. For site conditions different from the conditions listed herein, a licensed engineer or registered architect shall provide site-specific documents for use in conjunction with this evaluation report.

21. Engineer seal affixed hereto validates the structural design as shown only. Use of this specification by contractor, et. al. indemnifies and saves harmless this engineer for all costs and damages including legal fees and appellate fees resulting from material fabrication, system erection, and construction practices beyond that which is called for by local, state, and federal codes and from deviations of this plan.

AT-GRADE TIEDOWN (UP TO ± 54 PSF LATERAL ASD WIND PRESSURE)

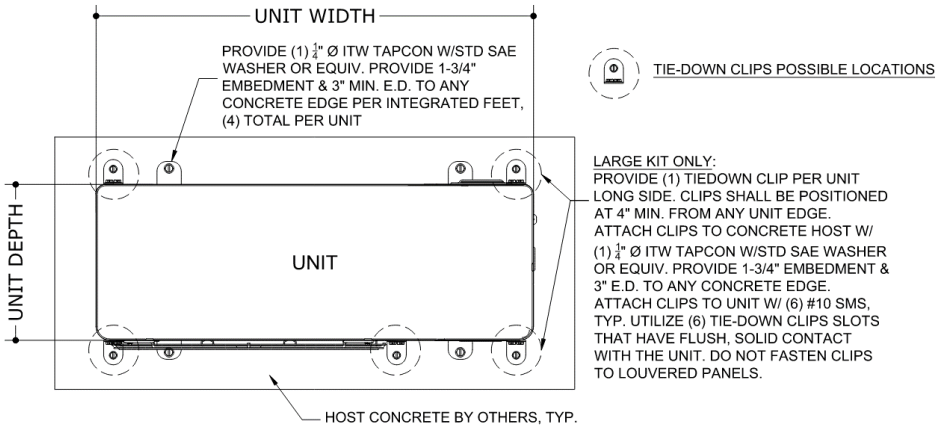

ROOFTOP TIEDOWN

The following (2) schedules are approved for the tiedown of the mechanical units specified herein:

Strap & Clip Schedule (Rooftop Tiedown)			
Cabinet Type	Max. ASD Wind Pressure Lateral (Uplift)	# of Straps	# of Clips per Unit Long Side
SMALL KIT	±80psf (64psf)	0	2
	±110psf (87psf)	0	2
	±140psf (111psf)	0	2
LARGE KIT	±80psf (64psf)	0	2
	±110psf (87psf)	2	2
	±140psf (111psf)	4	2

Strap & Clip Schedule (Rooftop Tiedown)			
Cabinet Type	Max. ASD Wind Pressure Lateral (Uplift)	# of Straps	# of Clips per Unit Long Side
SMALL KIT	±80psf (64psf)	2	0
	±110psf (87psf)	2	0
	±140psf (111psf)	2	0
LARGE KIT	±80psf (64psf)	2	0
	±110psf (87psf)	2	2
	±140psf (111psf)	4	2

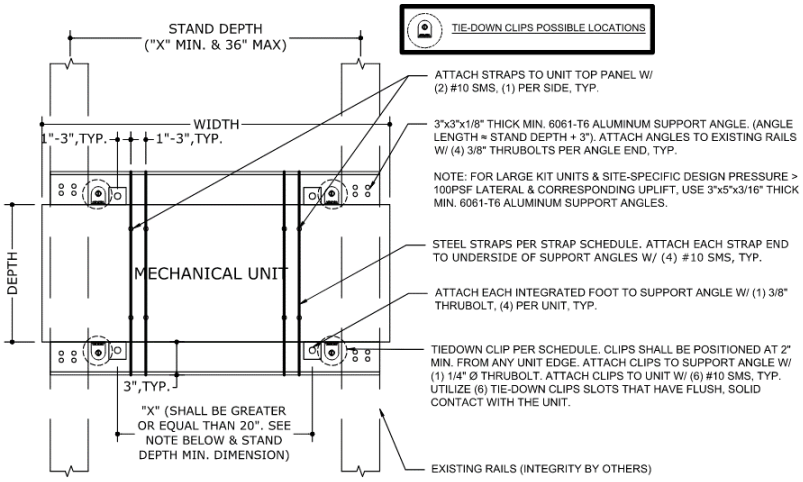

INSTALLATION CONDITION: UNIT PERPENDICULAR TO STAND RAILS

NOTE: "X" DIMENSION PER MANUFACTURER SPECIFICATIONS.

MIAMI TECH TIE-DOWN KIT NUMBERS:

-Ground Mount Kit:
FL14CUTD10KG

-Small Kit Roof Mount:
TGMCMLCSMKR

-Large Kit Roof Mount:
TGMCMLCCUTDLKR

PANEL INTEGRITY SUMMARY

No additional screws are required for ASD wind pressures up to ± 140 psf lateral & 111 psf uplift.

Panel integrity calculations were based on information provided by the client and manufacturer-listed specifications. Calculations are valid for all unit models listed herein, and specifications herein apply to all unit models listed herein (see “Model Information” section). All exterior panels were considered in the calculations and are covered by this certification. Panels were assigned various porosities depending on the ratio of louver/aperture area to total panel area, for the purposes of calculating the acting wind force on each panel. Screw sizes, quantities on panels, and panel characteristics were considered based on client-provided information and additional conservative assumptions. Screw quantities were checked to reinforce unit panels as needed.

TERMINOLOGY, CONTINUED

The following abbreviations may appear in this report: "Addtl." for "additional", "AHJ" for "Authority Having Jurisdiction", "alum" for "aluminum", "ASCE" for "American Society of Civil Engineers", "ASD" for "Allowable Stress Design", "ASTM" for "American Society for Testing and Materials", "EA." for "each", "E.D." for edge distance", "EDDS" for "extra deep drawing steel", "e.g." for "*exempli gratia*" or "for example", "equiv." for "equivalent", "FBC" for "Florida Building Code", "FEA" for "Finite Element Analysis", "FLCA" for "Florida Certificate of Authorization", "FS" for "Florida Statutes", "Fu" for "ultimate tensile strength" or "ultimate tensile stress", "Fy" for "yield strength" or "yield stress" "GA" for "gauge", "GR." or "Gr." for "grade", "HVAC" for "heating, ventilation, and air conditioning", "HVHZ" for "High-Velocity Hurricane Zone", "i.e. " for "*id est*" or "in other words", "in" for "inch", "lb" for "pound (force)", "max." for "maximum", "min." for "minimum", "mm" for "millimeter", "NTS" for "not to scale", "O.C. " for "on center", "OD" for "outer diameter", "pcf" for "pounds (force) per cubic foot", "PE" for "Professional Engineer", "qty" for "quantity", "SAE" for "Society of Automotive Engineering", "SMS" for "sheet metal screws", "SS" for "stainless steel", "TER" for "Technical Evaluation Report", "typ." for "typical", "ult" for "ultimate loads", "U.N.O." for "unless noted otherwise", "UTS" for "ultimate tensile strength" or "ultimate tensile stress", "WLL" for "working load limit", "w/o" for "without", "YS" for "yield strength" or "yield stress", "#" for "number", "&" for "and", and "Ø" for "diameter". Please visit ecalc.io/glossary for additional abbreviation clarifications.

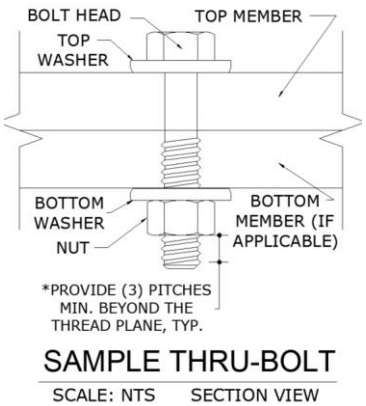

Note: The term "Thru-Bolt" or through bolt, if used herein, refers to a bolt passing through the member(s) in contact and is fastened by a nut at the end opposite the screw head. Nut shall be equivalent to or exceed the strength of the bolt U.N.O. Nut shall be sized to accommodate the same nominal diameter as the bolt U.N.O. See diagram above-right for a sample thru-bolt configuration. For instances herein which list material specifications as *"[material type] or stronger":* U.N.O. herein, the term "stronger" refers to a material with a UTS value equal to or greater than the UTS value of the stated material type. Consult appropriate literature for established material UTS values. Equivalent steel gauge thicknesses as used in this evaluation, U.N.O., are as follows: 22 GA (.030"), 20 GA (.036"), 18 GA (.048"), 16 GA (.060"), 14 GA (.075"), 12 GA (.098").

LIMITATIONS & CONDITIONS OF USE, CONTINUED

Use of this product shall be in strict accordance with this product evaluation as noted herein. The supporting host structure shall be designed to resist all superimposed loads as determined by others on a site-specific basis as may be required by the authority having jurisdiction. Host structure conditions which are not accounted for in this product's respective anchor schedule shall be designed for on a site-specific basis by a registered Professional Engineer. No evaluation is offered for the host supporting structure by use of this document. Adjustment factors noted herein and the applicable building codes must be considered, where applicable. Product components shall be of the material(s) specified in the manufacturer-provided product specifications. **For permanent outdoor installations, all exposed anchors, fasteners, connectors, and metal plates shall be corrosion resistant. Corrosion resistance may be provided by inherent material composition or, where permitted by code, by an approved protective coating or galvanization. Where applicable near a saltwater coastline, such components shall comply with FBC Section 1711, including applicable requirements for exposed, protected, or enclosed conditions. Materials, coatings, and finishes shall be compatible with connected materials, and protective coatings shall be continuous over exposed surfaces. Fasteners used with aluminum members shall also comply with Section J.3.7.2 of the Aluminum Design Manual, "Specification for Aluminum Structures." Substitution of components from alternate manufacturers, or with different materials, coatings, or finishes, shall not be assumed equivalent and may require additional engineering review or site-specific analysis.**
All fasteners and anchors shall be installed in accordance with the applicable provisions specified herein in addition to the anchor/fastener manufacturers' published installation instructions. *Fasteners must penetrate (3) pitches minimum beyond the thread plane of the connecting members in contact. For thru-bolt connections, provide (3) pitches minimum beyond end of nut. For screw connections, provide (3) pitches minimum beyond the bottom member. See Sample Thru-Bolt Detail herein.

All of the wind-resisting exterior panels (with accompanying retrofits) individually meet or exceed their capacity to resist the design wind loads as stated in the calculations as required by the codes and standards stated herein. Due to the indeterminate nature of these units, distortion, deflection, and material deformation cannot be accurately evaluated, but with the diaphragm action of external components and internal stiffeners, the base unit (with accompanying retrofits stated herein as applicable) has the capacity to withstand the design wind loads without detaching from the unit and becoming flying debris.

Survivability: This performance evaluation is valid for a newly installed unit and do not include certification of the product beyond a design event or if impacted by any debris. Inspections shall be implemented annually by the end user and after every named storm. All fasteners and cabinet components are to be verified, and all damaged, loose, corroded and/or broken fasteners and cabinet components shall be replaced to ensure structural integrity against hurricane wind forces. Contact this office for any reevaluation needs or as designated by the Authority Having Jurisdiction.

Durability: Components or component assemblies shall not deteriorate, crack, fail, or lose functionality due to galvanic corrosion or weathering. All supporting components which are permanently installed shall be protected against corrosion, contamination, and other such damage at all times. Each component or component assembly shall be supported and oriented in its intended installation position. All exposed plastic components shall be certified to resist sunlight exposure as specified by ASTM B117, or ASTM G155 in Broward or Miami Dade counties.

Extent of Certification: Certification pertains to the overall structural integrity of the unit components listed within the evaluation as required by code, subject to the limitations and criteria stated herein. Operability during or after a design event is not included in this certification. Water infiltration is outside the bounds of this certification. No other certifications are intended other than as described herein. This evaluation alone does not offer any evaluation for large missile impact debris or cyclic wind requirements unless specifically stated herein.

Proj. #	Remarks	By	Checked	Date	Proj. #	Remarks	By	Checked	Date
23-70400	TER Version	MRT	RWN	08/02/24	26-102106	2026 FBC Update	NRD	EPR	07/21/26
24-74129	FSA Initial Issue	MRT	RWN	08/21/24					

APPENDIX A: DESIGN WIND PRESSURE GUIDE

Max. Ult. Wind Speed (V_{ult})	Max. MRH (Roof Height)	Exposure Category	Required Design Wind Pressures (ASD)	
			Lateral Pressure	Uplift Pressure
140 mph	At-Grade (0 ft)	C	± 26 psf	0* psf
		D	± 31 psf	0* psf
	100 ft	C	± 63 psf	50 psf
		D	± 71 psf	56 psf
	200 ft	C	± 72 psf	57 psf
		D	± 80 psf	63 psf
175 mph	At-Grade (0 ft)	C	± 40 psf	0* psf
		D	± 49 psf	0* psf
	100 ft	C	± 98 psf	77 psf
		D	± 111 psf	87 psf
	200 ft	C	± 113 psf	89 psf
		D	± 124 psf	98 psf
186 mph	At-Grade (0 ft)	C	± 46 psf	0* psf
		D	± 54 psf	0* psf
	100 ft	C	± 111 psf	87 psf
		D	± 125 psf	99 psf
	200 ft	C	± 127 psf	100 psf
		D	± 140 psf	111 psf

~~100 psf~~ Note: Any table values with the format shown left, if present, indicate design wind pressures and site conditions that are **not approved for use** by this evaluation. Seek additional engineering or contact this firm for design solutions.

DIRECTIVE: This design pressure guide is for reference only and shall be approved for use by the Authority Having Jurisdiction (AHJ). If the design pressures listed in this guide are not used, required design pressures shall be calculated separately. For site-specific scenarios classified as Exposure Category B, the required design pressures stated for Exposure Category C in the above guide shall be used or design pressures shall be calculated separately. For heights and parameters beyond the parameters listed in this guide, visit our Online Calculator via the website link (https://ecalc.io/forces) or QR Code below, or obtain calculations separately by others.

The required ASD design pressures listed in this guide were calculated per the table's listed corresponding site conditions. The project design professional or permitting contractor shall verify that the site-specific conditions are equal to or less than the approved design parameters listed in the guide. Per the note below table: any values shown as "~~XX psf~~", indicate wind pressures and corresponding site conditions that are **not valid for use** with this evaluation (exceeds the max. rated pressures).

*Note: Per the codes and standards referenced herein, uplift is not required for mechanical equipment at-grade. If uplift at-grade is required by the AHJ, contact this firm for a site-specific evaluation.

At-Grade (0 ft MRH) Required Design Pressures:

- ASCE 7 "Design Wind Loads: Other Structures"
- Structure Shape = Square, flat terrain
- Height of structure (unit + stand or curb, if used) = 6 ft max.
- Width of unit = 1 ft min., Depth of unit = 11 in min.

Rooftop (>15 ft MRH) Required Design Pressures:

- ASCE 7 "Design Wind Loads: Other Structures: Rooftop Structures and Equipment for Buildings"
- Structure Shape = Square, flat terrain
- z = up to 7 ft, where z = height of stand or curb + ½ unit height
- Lateral GC_f = 1.90; Uplift GC_f = 1.50

VISIT ECALC.IO/FORCES

FOR DESIGN AID CALCULATORS AND RESOURCES RELATED TO THIS EVALUATION & GUIDES HEREIN, OR SCAN THE QR CODE RIGHT >

UNIT REACTIONS FROM WIND GUIDE

DIRECTIVE: This guide is intended for use by a design professional. Design parameters shall abide all specifications and limitations stated in this evaluation. Design professional shall consider all forces, including seismic and snow loads, per the governing building code. Unit reactions obtained from this guide shall be verified by a registered Professional Engineer. Reactions are applicable for unit-to-host connections only. Sample calculations are provided below.

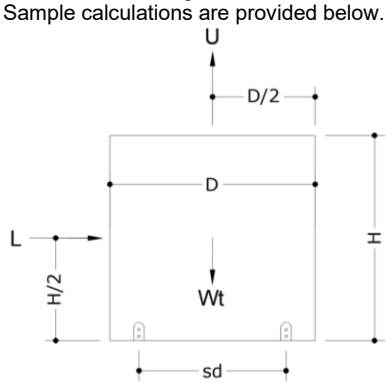

Design Parameters:

- Lateral Wind Pressure, P_lat
- Unit Height, H
- Unit Width, W
- Support Spacing across Depth, sd
- Uplift Wind Pressure, P_up
- Unit Depth, D
- Unit Weight, Wt
- Support Spacing across Width, sw

Unit Reaction Equations:

Long Side (Width x Height):

- Sliding Force, L = P_lat x W x H
- Uplift Force, U = P_up x W x D
- Total Tension per Long Side =
(L x H/2 + U x sd/2 – Wt x 0.6 x sd/2) / sd

Short Side (Depth x Height):

- Sliding Force, L = P_lat x D x H
- Uplift Force, U = P_up x W x D
- Total Tension per Short Side =
(L x H/2 + U x sw/2 – Wt x 0.6 x sw/2) / sw

Example: A (48" W x 36" D x 42" H), 250 lb net weight unit at wind pressures of 120 psf lateral and 95 psf uplift, on a 24" wide roof stand, shall have the following unit reactions:

Long Side (Width x Height):

1. Sliding Force, L = P_lat x W x H
   = (120 psf) x (48 in) x (42 in) x (1 in^2 / 144 ft^2) = **1680 lb**
2. Uplift Force, U = P_up x W x D
   = (95 psf) x (48 in) x (36 in) x (1 in^2 / 144 ft^2) **= 1140 lb**
3. Total Tension per Long Side =
   = (L x H/2 + U x sd/2 – Wt x 0.6 x sd/2) / sd
   = ((1680 lb x 42/2 in) + (1140 lb x 24/2 in) – (250 lb x 0.6 x 24/2 in)) / 24 in **= 1965 lb**

Short Side (Depth x Height):

1. Sliding Force, L = P_lat x D x H
   = (120 psf) x (36 in) x (42 in) x (1 in^2 / 144 ft^2) **= 1260 lb**
2. Uplift Force, U = P_up x W x D
   = (95 psf) x (48 in) x (36 in) x (1 in^2 / 144 ft^2) **= 1140 lb**
3. Total Tension per Short Side =
   = (L x H/2 + U x sw/2 – Wt x 0.6 x sw/2) / sw
   = ((1260 lb x 42/2 in) + (1140 lb x 48/2 in) – (250 lb x 0.6 x 48/2 in)) / 48 in **= 1046 lb**

IN ALL CONDITIONS IT IS THE RESPONSIBILITY OF THE PERMIT HOLDER TO ENSURE THE HOST STRUCTURE IS CAPABLE OF WITHSTANDING THE RATED GRAVITY, LATERAL, AND UPLIFT FORCES BY SITE-SPECIFIC DESIGN. NO WARRANTY OF ANY KIND, EXPRESSED OR IMPLIED, IS OFFERED BY ENGINEERING EXPRESS AS TO THE INTEGRITY OF THE HOST STRUCTURE TO CARRY DESIGN FORCE LOADS INCURRED BY THIS UNIT.