ENGINEERING EXPRESS®

ENGINEERINGEXPRESS.COM | (954) 354-0660
POSTAL ADDRESS:
2234 NORTH FEDERAL HWY #7664
BOCA RATON, FL 33431

Performance Evaluation

Florida Statewide Product Approval (FSA) # FL 46980.2
Engineering Express Project # 26-101536
THIS DOCUMENT CONTAINS (11) PAGES.

EVALUATION SUBJECT: DH SERIES PACKAGED UNITS

FL # 46980.2

REPORT HOLDER:
RHEEM SALES COMPANY, INC.
800 INTERSTATE PARK DR
MONTGOMERY, AL 36109, USA
(770) 351-3000 | RHEEM.COM

SCOPE OF EVALUATION (compliance with the following codes):

THIS IS A STRUCTURAL (WIND) PERFORMANCE EVALUATION ONLY. NO ELECTRICAL OR TEMPERATURE PERFORMANCE RATINGS OR CERTIFICATIONS ARE OFFERED OR IMPLIED HEREIN.
UNDER NO CIRCUMSTANCE DOES THIS PERFORMANCE EVALUATION GUARANTEE, IMPLY, OR STATE PERFORMANCE OF THE UNIT IS MAINTAINED DURING OR AFTER A DESIGN EVENT.

This Performance Evaluation is being issued in accordance with the requirements of the **Florida Building Code Ninth Edition (2026)** per ASCE 7, FBC Building Ch. 16, FBC Building Sections 104.11 & 1522.2, FBC Existing Building Sections 707.1 & 707.2, FBC Mechanical 301.15, FBC Residential M1202.1 & M1301.1, and FS 471.025. The product noted in this performance evaluation has been tested and/or evaluated as summarized herein.

SUBSTANTIATING DATA:
• Product Evaluation Documents
Substantiating documentation has been submitted to provide this performance evaluation and is summarized in the sections below.
• Structural Engineering Calculations
Structural engineering calculations have been prepared which evaluate the product based on comparative and/or rational analysis to qualify the following design criteria:

- Max. allowable lateral & uplift wind pressures certified herein
- Max. allowable sliding forces, uplift forces, & overturning moments (see Unit Reactions from Wind Guide on last page)
- Tie-down configuration and anchor capacity for concrete, aluminum, and steel host substrates (host by others).
- Unit panel wind pressure connection integrity

Calculation summary is included in this product evaluation and appears herein.

LIMITATIONS & CONDITIONS OF USE:
Use of the product(s) listed herein shall be in strict accordance with this product evaluation as noted herein and manufacturer-provided model specifications. Installation shall conform to the minimum standards stated in the referenced building code(s) in addition to the specifications and limitations stated herein. See herein for complete limitations & conditions of use.

OPTIONS:
This evaluation is valid for the models described herein. The critical unit designs have been determined and used in this evaluation. Any structural changes outside of the design as described herein would void this certification.

UNIT CASING MATERIALS:
Exterior panels, unit base, and integrated feet/legs shall be constructed of UTS = 36 ksi min. (or 250 MPa min.) galv. steel. Exterior panels shall be 22 GA min. thick. Unit base shall be 20 GA min. thick. Unit base rails shall be 18 GA min. thick. Exterior panels shall be secured with #8 (0.164") min. Ø, SAE Gr. 2 min. or SS sheet metal screws. Contact Report Holder for further unit construction information.

TERMINOLOGY:
See herein for definitions of terms and abbreviations used in this evaluation.

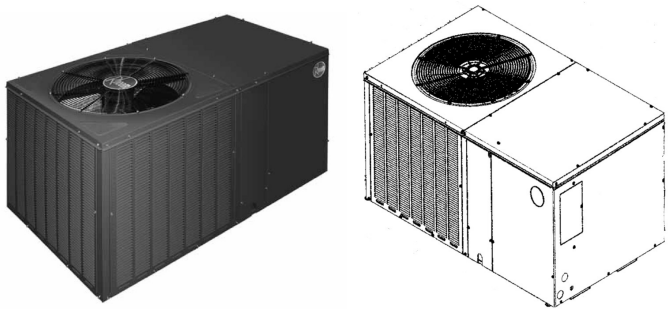

NOTE: THE GRAPHICAL DEPICTIONS IN THIS EVALUATION ARE FOR ILLUSTRATIVE PURPOSES ONLY AND MAY DIFFER IN APPEARANCE.

STRUCTURAL PERFORMANCE:
Models referenced herein are subject to the following design limitations:

Maximum-Rated ASD Wind Pressures*:
± 140 psf Lateral, 111 psf Uplift

- Required design wind pressures shall be determined according to the guide provided in the Appendix (see last page of this document) or on a site-specific basis in accordance with ASCE 7 and applicable sections of the building code(s) being referenced in accordance with ASD methodology.
- Required design wind pressures shall be less than or equal to the maximum pressures listed herein.
- *Maximum Rated Wind Pressures indicate the maximum pressures that all units listed herein are approved for. Valid for at-grade and rooftop applications. See limitations herein.
- Valid for use inside and outside the High-Velocity Hurricane Zone (HVHZ).
- Site-specific wind analysis may produce alternate limitations provided that the maximum-rated wind pressures stated herein are not exceeded.

VISIT ECALC.IO/RHEEM
FOR MORE INFORMATION AND DEVIATIONS TO THIS EVALUATION OR SCAN THE QR CODE TO THE RIGHT >

Engineer Signature & Seal:

COLBY BENNARDO LICENSE No 95197 STATE OF FLORIDA PROFESSIONAL ENGINEER

Digitally signed by Colby Bennardo
Date: 2026.08.17 11:24:22 -04'00'

August 14, 2026

Colby Bennardo, P.E.
ENGINEERING EXPRESS®
FL PE #95197 FLCA #9885

*PRINTED COPIES OF THIS DOCUMENT ARE NOT CONSIDERED SIGNED & SEALED. SIGNATURE MUST BE VERIFIED ON ANY ELECTRONIC COPIES.
***FOR FLORIDA STATEWIDE PRODUCT APPROVALS (FSAs) REGISTERED & APPROVED WITH THE STATE OF FLORIDA:** ORIGINAL, SEALED COPIES OF APPROVED FLORIDA PRODUCT APPROVALS ARE NOT REQUIRED FOR PERMIT. SEE **ECALC.IO/SEAL** TO LEARN MORE.

MODEL INFORMATION
(Continued on Next Page)

Cabinet Group	Unit Dimensions (in)		
	Width	Depth	Height
DH S	59.000	33.000	29.125
DH T	59.000	33.000	37.125

Model Number	Cabinet
*ACB**024	DH S
*ACB**030	
*ACB**036	
*ACB**042	
*ACB**048	DH T
*ACB**060	

Model Number	Cabinet
*HPB**024	DH S
*HPB**030	
*HPB**036	DH T
*HPB**042	
*HPB**048	
*HPB**060	

MODEL INFORMATION NOTES

Model number characters marked by an asterisk (*) do not pertain to this structural certification and may be any combination of number and/or letters.

Unit dimensions listed above are unit net/operating dimensions (as opposed to gross/packing/shipping dimensions). Cabinet designations were determined by Engineering Express based on the cabinet size. Both Cabinet groups were considered to be of the same unit construction and panel layout, except that the DHT Cabinet is taller than the DHS Cabinet. Unit net/operating weights shall be as follows:

- DHS Cabinets: between 230 lb and 360 lb, typ.
- DHT Cabinets: between 310 lb and 440 lb, typ.

The model information listed herein is based on information provided by the client. See Detail 1 below for definitions of unit dimensions. See Details 2 through 4 for panel designations (related to the Panel Integrity evaluation summarized herein) and additional views of the unit cabinetry. Unit appearance may vary. Please contact Report Holder for more information.

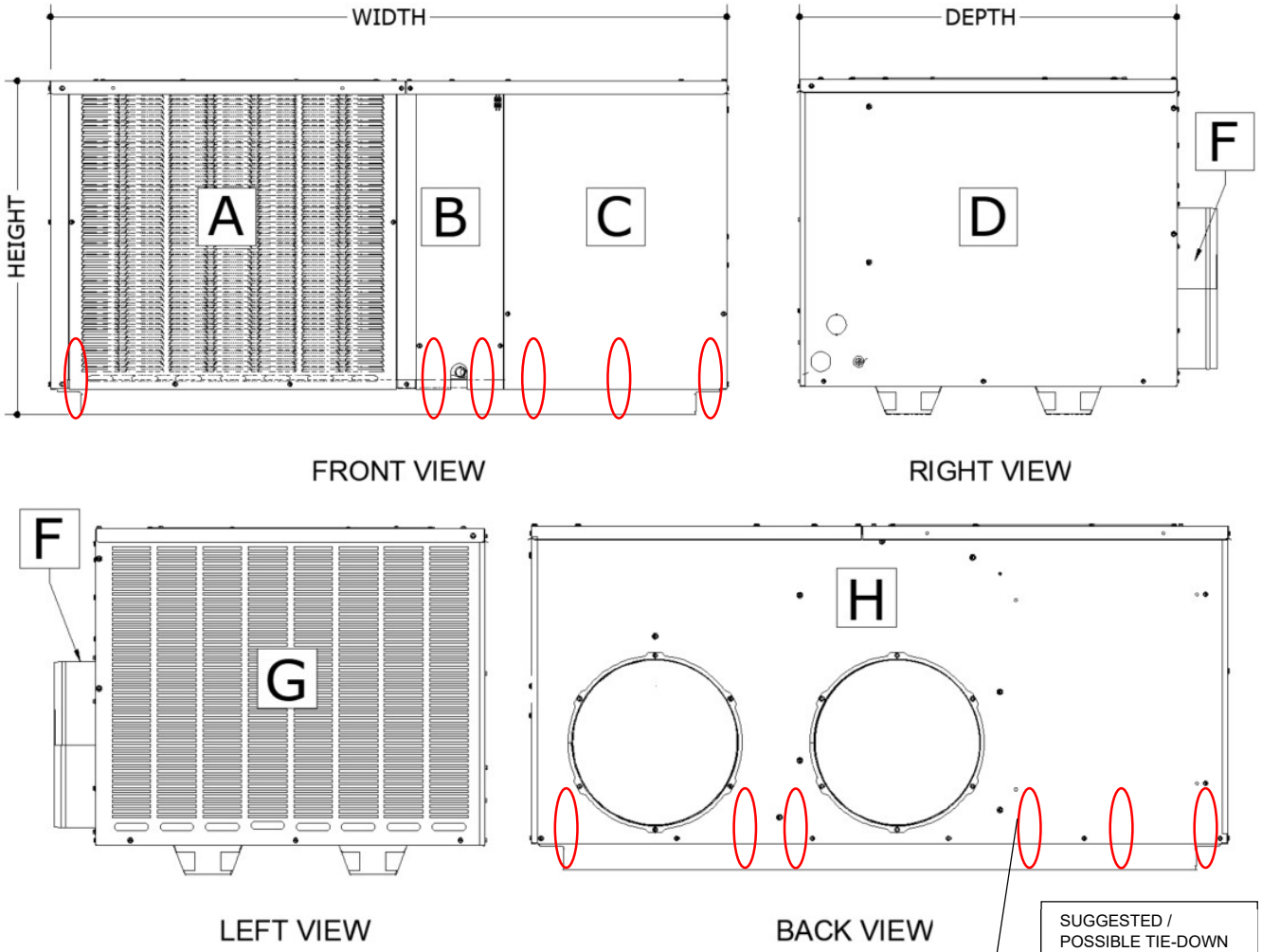

1 UNIT DIMENSIONS & PANEL DESIGNATIONS
SCALE: NTS MULTIPLE VIEWS

MODEL INFORMATION
(Continued from Previous Page)

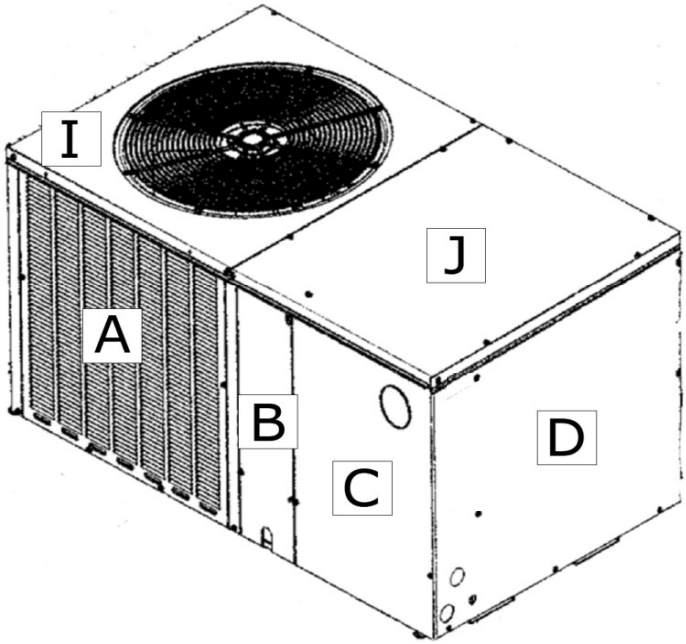

2 PANEL DESIGNATIONS
SCALE: NTS FRONT-RIGHT VIEW

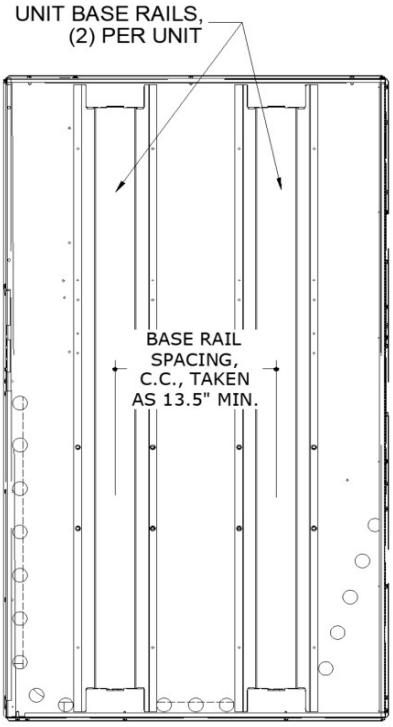

3 UNIT BASE RAILS
SCALE: NTS RIGHT-BACK VIEW

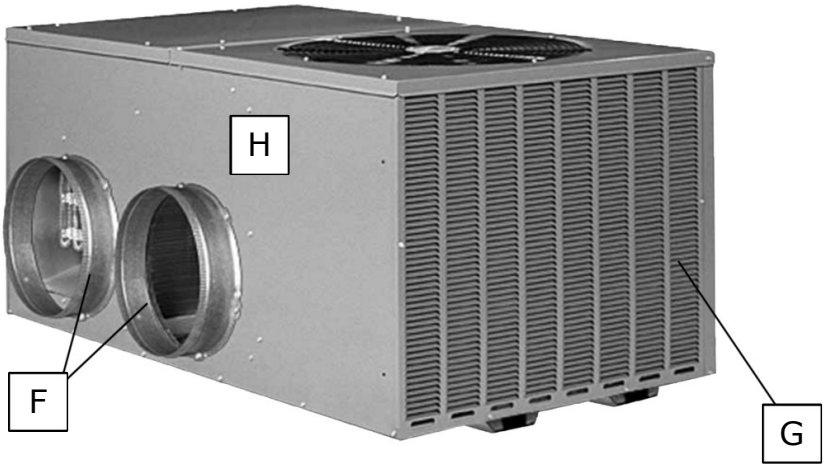

4 PANEL DESIGNATIONS
SCALE: NTS BACK-LEFT VIEW

PANEL DESIGNATIONS NOTES

Panel layouts as designated herein by the boxed call-outs (e.g. “A”, “B”, etc.) are as follows:

The unit’s front side is composed of a louver wall panel toward the left, designated Panel “A”, a condensate drain pan access panel at the center, designated Panel “B”, and a control box access panel toward the right, designated Panel “C”. The unit’s right side is composed of a main panel comprising the entire right wall, designated Panel “D”. The unit’s left side is composed of a louvered wall panel, designated Panel “G”. The unit’s back side is composed of a main panel comprising the entire back wall, designated Panel “H”, and two circular duct collars, each designated Panel “F”. The roof of the unit is composed of two solid panels: a Panel “I” containing the fan cage and a solid Panel “J” without the fan cage. Corner post(s), fan cage, and other smaller panels were considered in the Panel Integrity analysis summarized herein but may not be specifically designated above. Unit appearance may vary slightly. See the Panel Integrity section herein.

TIE-DOWN SCHEDULE

Installation Condition	Max. ASD Wind Pressures Lateral (Uplift)	Anchor Schedule to Host Structure By Others			# of Tie-Down Clips	# of Tie-Down Straps
		f'c = 3 ksi min. Regular-Weight Concrete Host	12 GA min. thick UTS = 58 ksi min. Steel Host	0.090" min. thick 6061-T6 Aluminum Host		
At-Grade	± 54 psf (0 psf)	A	N/A	N/A	6	0
At-Grade or Rooftop	± 80 psf (64 psf)	N/A	B	B	4	3
	± 110 psf (87 psf)	N/A	B	B	6	3
	± 140 psf (111 psf)	N/A	B	B	10	4

TIE-DOWN SCHEDULE NOTES (Continued Next Page)

TIE-DOWN SCHEDULE DIRECTIVE:

The Tie-Down Schedule table above is divided into maximum wind pressure tiers (each row of the table). Site-specific wind pressures up to ± 54 psf lateral & 0 psf uplift shall use, at minimum, the tie-down specifications as stated in the ± 54 psf lateral (0 psf uplift) pressure tier row. Site-specific wind pressures that fall in-between pressure tiers shall use, at minimum, the tie-down specifications as specified by the higher pressure tier. Ensure the host structure by others meets the minimum specifications as stated in the Anchor Schedule section of the table. The Tie-Down Schedule applies to all units described in this evaluation. See tie-down specifications and Details herein. Contact Engineering Express for site scenarios outside the bounds of this evaluation.

Example 1: Say your installation is at-grade, with site-specific wind pressures of ± 45 psf lateral and 0 psf uplift. In this case, you would need to follow, at minimum, the tie-down specifications corresponding to the ± 54 psf (0 psf) wind pressure tier row. This row only permits anchoring to concrete host structures. If your host structure is aluminum or steel, you would need to use, at minimum, the tie-down specifications corresponding to the ± 80 psf (64 psf) wind pressure tier row.

Example 2: Say your installation is rooftop, with site-specific wind pressures of ± 96 psf lateral and 76 psf uplift. In this case, you would need to follow, at minimum, the tie-down specifications corresponding to the ± 110 psf (87 psf) wind pressure tier row. This row permits aluminum and steel host structures only. Anchoring to a concrete host structure would not be permitted in this example.

ANCHOR SCHEDULE NOTES:

In all cases, host structure is by others. Anchor shall be selected per site-specific wind pressures and host structure substrate. Utilize (1) anchor per tie-down clip (see tie-down clip notes below). Anchor specifications as represented in the Tie-Down Schedule are as follows:

A: Anchors to Concrete Hosts for Unit Integrated Feet:
1/4" Ø ITW Tapcon or equivalent with 1-3/4" embedment, 2" min. edge distance to any edge of concrete, and 4-1/4" min. spacing from neighboring concrete anchors, typ. Use (1) 1" min. OD fender washer sized for 1/4" Ø anchors under each anchor head

B: Anchors to Aluminum/Steel Hosts for Tie-Down Clips:
1/4" Ø, SAE Gr. 5 or stronger thru-bolt with 1" min. OD fender washers sized for 1/4" Ø bolts top and bottom and locking nut, typ. Provide 1/2" min. edge distance to any edge of host structure and 1" min. spacing from neighboring thru-bolts, typ.

N/A: Not applicable.

TIE-DOWN CLIP NOTES:

Tie-down clips shall be 1" min. wide, 8"-12" tall, 0.068" min. thick, A653 Gr. 33 or stronger galv. steel. Fasten clip to host structure with (1) anchor per tie-down clip according to the "Anchor Schedule to Host Structure" specifications stated herein. Ensure anchor is placed at center of tie-down clip leg to provide 1/2" min. edge distance, typ. Fasten clip to unit base rail with (6) #10, SAE Gr. 2 min. or SS self-drilling screws with 1/2" min. OD washers, typ. Utilize (6) slots that have flush, solid contact with unit, (1) screw per slot, typ. Care must be taken to avoid screw contact with internal piping and components. Exercise caution with screw installation. Ensure all screws fully engage with the unit. Tie-down clips shall sit flush on host structure and flush against unit. See tie-down clip details herein.

Distribute the required tie-down clip quantity evenly between the front and back sides of unit, typ. Position the first (4) clips of the required clip quantity as close to the unit corners as is feasible while still achieving the specifications stated herein. See the "Model Information" section prior for suggested tie-down clip locations.

For rooftop applications, orient the unit such that the unit's long sides are parallel with the host structure rails (i.e. aluminum or steel roof stand rails). Depending on the host member size and spacing, it may be necessary to add construct a support frame composed of (4) support angles to accommodate tie-down clip placement. The minimum spacing between host members shall be 13.5" center-to-center in all cases. If needed, support angles shall be added as depicted in the tie-down details herein. Support angle(s) shall be L-angle(s) with the following specifications: 3" min. wide legs x 1/8" min. thick, 6061-T6 aluminum. Support angle length may vary so long as the support angle attachment conditions are achieved. Attach support angles overlaying the host structure members with (4) 1/4" Ø, SAE Gr. 5 or stronger Thru-Bolts per crossing with the host members, (16) total. Attach support angles to each other with (2) 1/4" Ø, SAE Gr. 5 or stronger Thru-Bolt at each angle-to-angle crossing, (8) total per support frame. Provide 1" min. OD fender washers sized for 1/4" Ø bolts top and bottom and locking nut, typ. Provide 1" min. spacing between Thru-bolts and 1/2" min. edge distance to any edge of members in contact (support angle and host structure member). See Tie-Down Details herein.

TIE-DOWN SCHEDULE NOTES (Continued from Previous Page)

TIE-DOWN STRAP NOTES:

For at-grade installations to concrete host structures up to ± 54 psf lateral & 0 psf uplift wind pressures, tie-down straps are not required.

Tie-down straps shall be 1" min. wide x 20 GA (.036") min. thick, UTS = 45 ksi min. (equiv. to ASTM A653 Gr. 33 or stronger) galv. steel. Position tie-down straps at either end of unit long side, 3" minimum away from unit edge, typ. (See Tie-Down Details herein). Wrap each tie-down strap over the long sides and top of the unit and attach each strap end to the aluminum or steel host structure members (i.e. wall brackets or roof stand rails). Attach each strap end to the host structure member with (2) #12, SAE Gr. 2 min. or SS SMS with 1/2" min. spacing between screws and 3/8" min. edge distance to any edge of strap and host structure member, typ. It is suggested that the straps attach to the undersides of the host structure members, but the straps are permitted to attach to any horizontal or vertical face of the host structure so long as all conditions stated herein are achieved. See the Tie-Down Details herein.

NOTE: Tie-down straps are also permitted to attach to any horizontal or vertical face of the aluminum support angles instead of and/or in combination with attaching to the host structure members, typ. All other screw specifications above apply. See the Tie-Down Details herein.

Tie-down strap lengths shall be determined by the installing contractor. Ensure strap lengths are such that the strap is neither excessively taut nor excessively slack once installed. A secure fit should be achieved. Neoprene pads may be placed between the unit and strap to protect the unit from damage/distortion. Straps may be removed for maintenance purposes but shall be replaced per the attachment directive herein following maintenance. **Tie-down straps must be in place before any named storm or similar high-wind event.**

TIE-DOWN DETAILS, 5 - 6

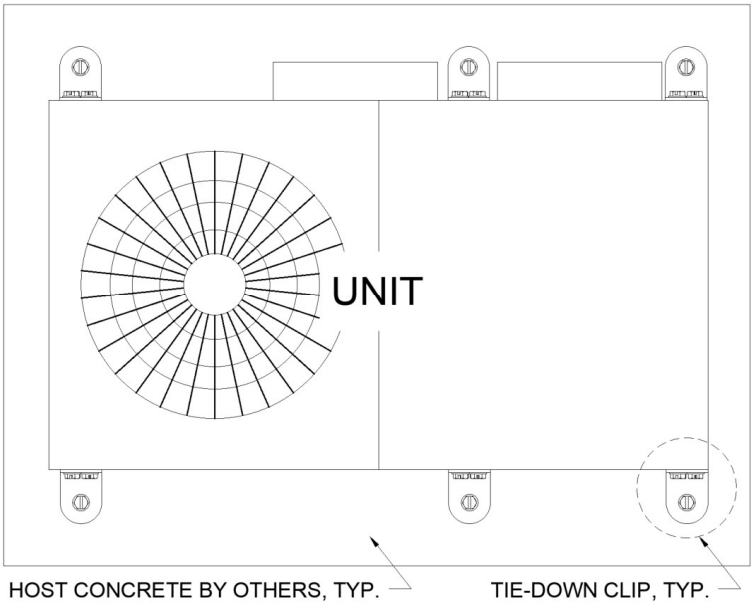

5 SAMPLE TIE-DOWN LAYOUT TO CONCRETE, TYP.
SCALE: NTS PLAN VIEW

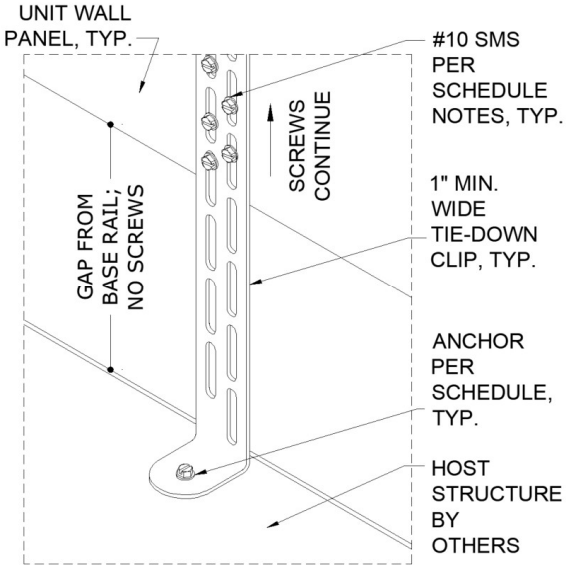

6 TIE-DOWN CLIP ATTACHMENT, TYP.
SCALE: NTS ISOMETRIC VIEW

TIE-DOWN DETAILS, 5 – 6 NOTES

For each Detail in this section, consult the Tie-Down Schedule and Notes herein for all tie-down components & specifications required.

The units depicted in the Details on this page are for illustrative purposes only. Units may vary in appearance. Tie-down system may not be depicted in full. The sample tie-down layouts shown herein are for illustrative purposes only. Tie-down components may be exaggerated in size for illustration clarity. Tie-down locations may vary per the specifications of the Tie-Down Schedule and Notes herein. Host structure shape may vary.

For Detail 8, there is a gap that exists between the host structure's horizontal face and the start of the wall panel due to the unit base rails. The tie-down clip attaches to the unit wall panels, so the tie-down clip shall be tall enough to span the gap created by the base rails and provide the number of slots needed for attaching the clip-to-unit screws; see Tie-Down Schedule and Notes.

TIE-DOWN DETAILS, 7 - 9

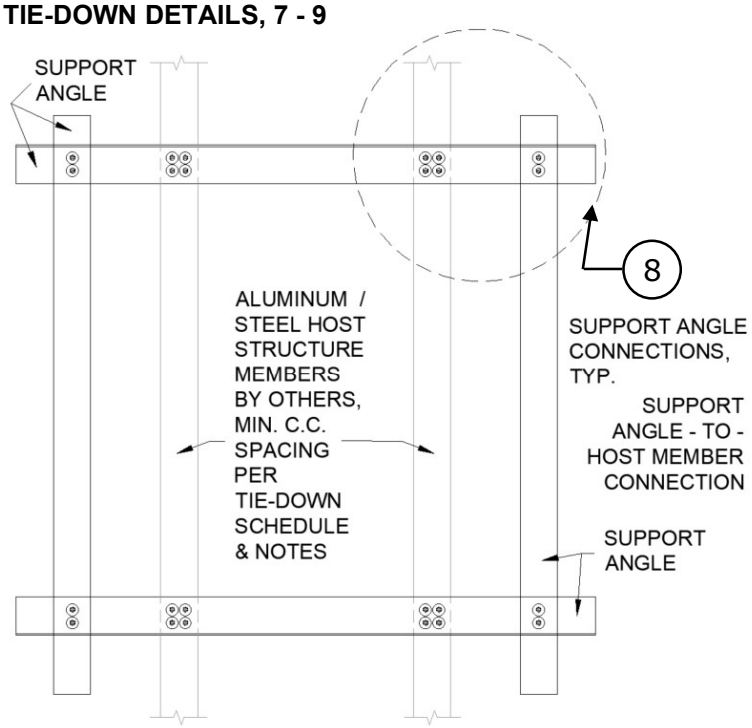

7 (ROOFTOP ONLY) SUPPORT FRAME LAYOUT, TYP.
SCALE: NTS PLAN VIEW

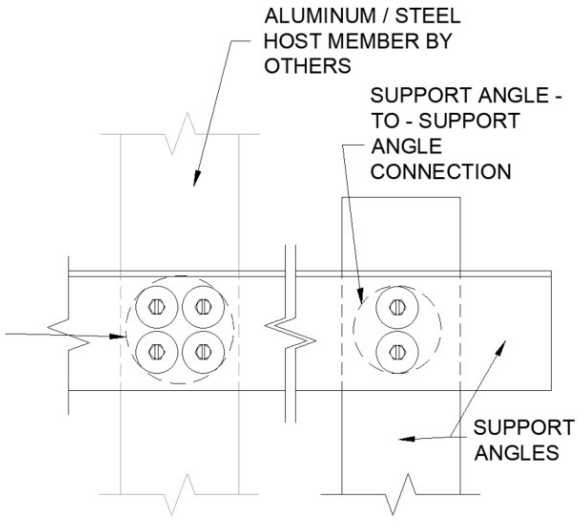

8 (ROOFTOP ONLY) SUPPORT ANGLE CONNECTIONS, TYP.
SCALE: NTS PLAN VIEW

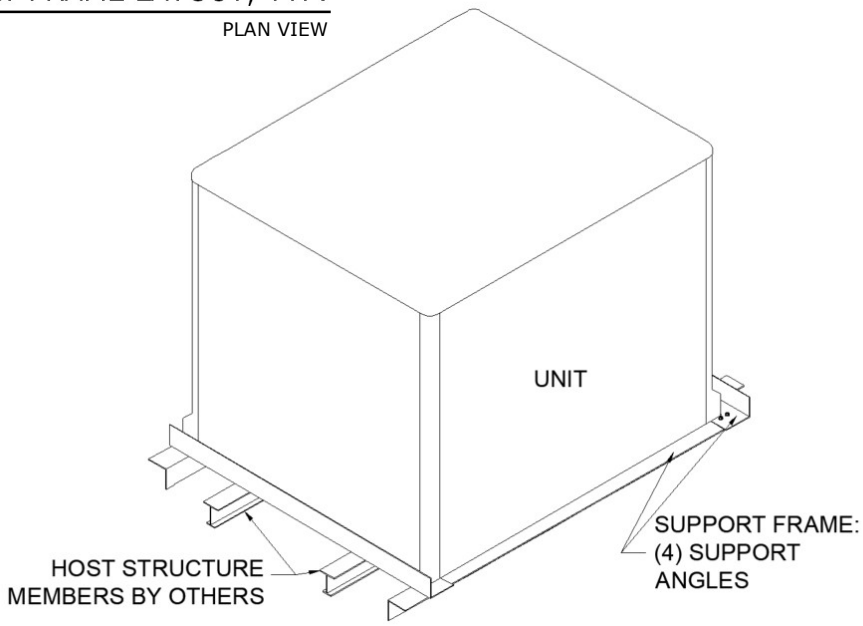

9 (ROOFTOP ONLY) UNIT POSITIONING ON SUPPORT FRAME / HOST MEMBERS, TYP.
SCALE: NTS ISOMETRIC VIEW

TIE-DOWN DETAILS, 7 - 9 NOTES

For each Detail in this section, consult Tie-Down Schedule and Notes herein for all tie-down components & specifications required.

The units depicted in the Details on this page are for illustrative purposes only. Units may vary in appearance. Tie-down system may not be depicted in full. The sample tie-down layouts shown herein are for illustrative purposes only. Tie-down components may be exaggerated in size for illustration clarity. Tie-down locations may vary per the specifications of the Tie-Down Schedule and Notes herein. Host structure shape may vary.

TIE-DOWN DETAILS, 10 - 11

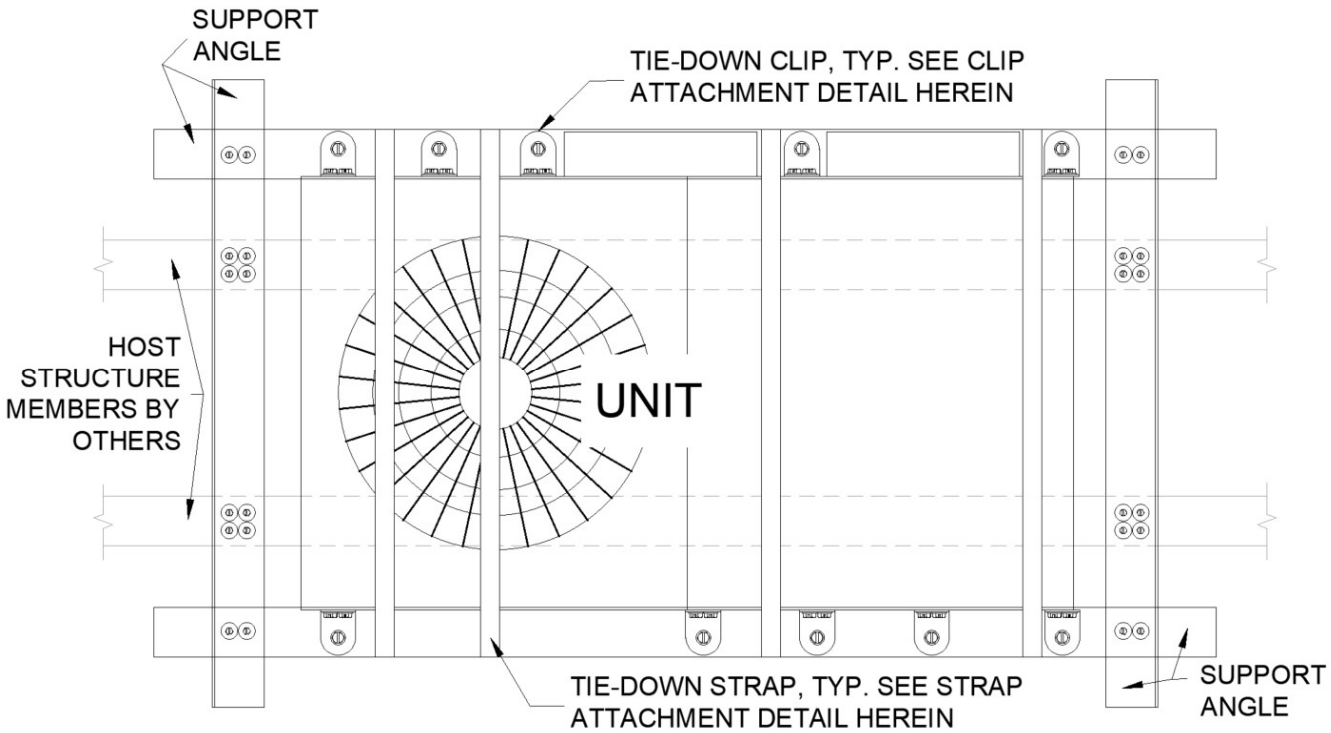

10 SAMPLE TIE-DOWN TO ALUMINUM / STEEL HOST

SCALE: NTS SIDE VIEW, UNIT || TO HOST SUPPORTS

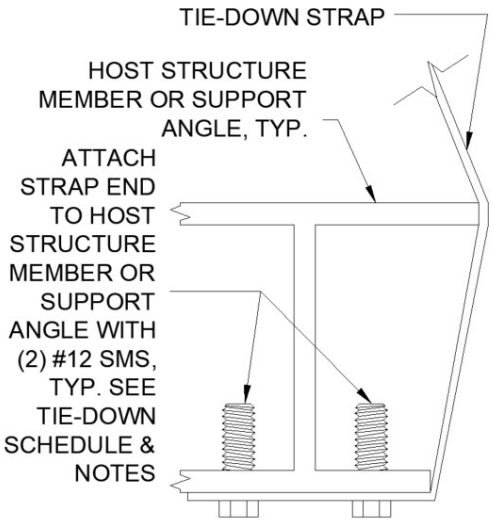

11 TIE-DOWN STRAP ATTACHMENT, TYP.

SCALE: NTS SECTION VIEW

TIE-DOWN DETAILS, 10 - 11 NOTES

For each Detail in this section, consult Tie-Down Schedule and Notes herein for all tie-down components & specifications required.

The units depicted in the Details on this page are for illustrative purposes only. Units may vary in appearance. Tie-down system may not be depicted in full. The sample tie-down layouts shown herein are for illustrative purposes only. Tie-down components may be exaggerated in size for illustration clarity. Detail 10 provides a sample tie-down layout for the worst-case wind pressure tier. Tie-down locations may vary per the specifications of the Tie-Down Schedule and Notes herein. Host structure shape may vary.

PANEL INTEGRITY SUMMARY (Continued on Next Page)

No additional screws are required for all at-grade installations and rooftop installations up to ± 80 psf lateral & 64 psf uplift ASD.

For rooftop installations with site-specific wind pressures greater than ± 80 psf lateral & 64 psf uplift ASD, follow the directives and specifications as noted in the Panel Integrity Summary Table and Notes herein:

Up to ± 140 psf Lateral & 111 psf Uplift Wind Pressures		
Panel Designations	**Addtl. Screws Required**	**Additional Screws Directive**
Panel B (Condensate Drain Pan Access Panel)	3	Install (2) addtl. screws into at bottom of panel to join with the unit base. Install (1) addtl. screw at top of panel to join with the Top Panel.
Panel C (Control Box Access Panel)	3	Install (2) addtl. screws into at bottom of panel to join with the unit base. Install (1) addtl. screw at top of panel to join with the Top Panel.
Panel D (Right Wall Panel)	5	Install (3) addtl. screws into at bottom of panel to join with the unit base. Install (2) addtl. screws at top of panel to join with the Top Panel.
(11) Additional Screw Required in Total per Unit. Addtl. screws shall be #12 min. Ø, SAE Gr. 2 min. or SS SMS. See notes below for further specifications.		

Note: Wind pressures listed in the table are ASD wind pressures.

PANEL INTEGRITY SUMMARY NOTES

Panel integrity calculations were based on information provided by the client and manufacturer-listed specifications. Calculations are valid for all unit models listed herein, and specifications herein apply to all unit models listed herein (see "Model Information" on page 2). All exterior panels were considered in the calculations and are covered by this certification. Panels were assigned various porosities depending on the ratio of louver/aperture area to total panel area, for the purposes of calculating the acting wind force on each panel. Screw sizes, quantities on panels, and panel characteristics were considered based on client-provided information and additional conservative assumptions. Screw quantities were checked to reinforce unit panels as needed.

"Additional screws" are screws that are required to be installed ***in addition to*** the existing screws present as part of the original unit design(s) submitted to this office, unless noted otherwise (U.N.O.). It is the installing contractor's responsibility to ensure additional screws are installed on the unit as applicable. The purpose of additional screws are to ensure panel connection integrity, referred to herein as "panel integrity", is sufficiently validated, such that the panel in question can withstand a high-speed wind gust and not detach or otherwise become flying debris.

Additional screw(s) shall be #12 minimum diameter, SAE Gr. 2 min. or SS SMS. 1000 hours of ASTM B117 with zero red rust is required for all additional screws. Position additional screw(s) as directed by the respective "Additional Screws Directive" specifications for the panel in question. Provide 1" min. spacing between neighboring screws (existing or additional). Validate that each additional screw joins the panel in question to the other specified member (as specified in the "Additional Screws Directive" where applicable). See diamond "◇" regions in Detail 12 herein for approximate screw locations.

PANEL F DIRECTIVE Panel "F" represents each duct collar, typ. of (2).

For Panel "F", this evaluation considers the ductwork by others to be installed on all units as part of the units' normal operation, and that the ductwork covers the openings where the duct collars are located. The Panel "F" regions are not permitted to be uncovered by this evaluation. Ductwork by others shall attach to the unit per separate engineering.

PANEL INTEGRITY SUMMARY (Continued from Previous Page)

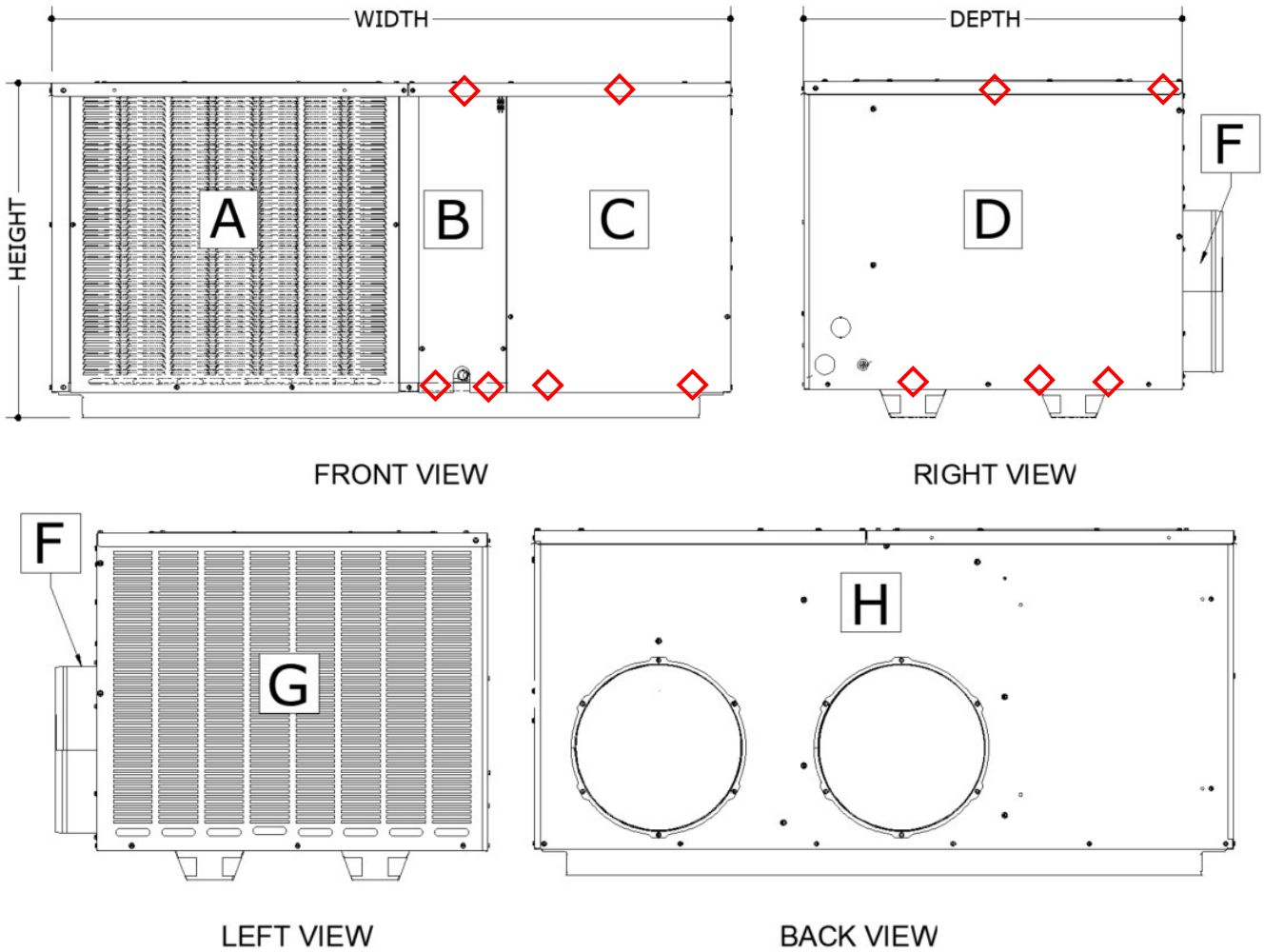

12 SAMPLE ADDITIONAL SCREW LOCATIONS, TYP.

SCALE: NTS MULTIPLE VIEWS

REMAINDER OF PAGE INTENTIONALLY LEFT BLANK

TERMINOLOGY

The following abbreviations may appear in this report: “Addtl.” for “additional”, “AHJ” for “Authority Having Jurisdiction”, “alum” for “aluminum”, “ASCE” for “American Society of Civil Engineers”, “ASD” for “Allowable Stress Design”, “ASTM” for “American Society for Testing and Materials”, “EA.” for “each”, “E.D.” for edge distance”, “EDDS” for “extra deep drawing steel”, “e.g.” for “*exempli gratia*” or “for example”, “equiv.” for “equivalent”, “FBC” for “Florida Building Code”, “FEA” for “Finite Element Analysis”, “FLCA” for “Florida Certificate of Authorization”, “FS” for “Florida Statutes”, “Fu” for “ultimate tensile strength” or “ultimate tensile stress”, “Fy” for “yield strength” or “yield stress” “GA” for “gauge”, “GR." or “Gr.” for “grade”, “HVAC” for “heating, ventilation, and air conditioning”, “HVHZ” for “High-Velocity Hurricane Zone”, “in” for “inch”, “lb” for “pound (force)”, “max.” for “maximum”, “min.” for “minimum”, “mm” for “millimeter”, “NTS” for “not to scale”, “O.C. ” for “on center”, “OD” for “outer diameter”, “pcf” for “pounds (force) per cubic foot”, “PE” for “Professional Engineer”, “qty” for “quantity”, “SAE” for “Society of Automotive Engineering”, “SMS” for “sheet metal screws”, “SS” for “stainless steel”, “TER” for “Technical Evaluation Report”, “typ.” for “typical”, “ult” for “ultimate loads”, “U.N.O.” for “unless noted otherwise”, “UTS” for “ultimate tensile strength” or “ultimate tensile stress”, “WLL” for “working load limit”, “w/o” for “without”, “YS” for “yield strength” or “yield stress”, “#” for “number”, “&” for “and”, and “Ø” for “diameter”. Please visit ecalc.io/glossary for additional abbreviation clarifications.

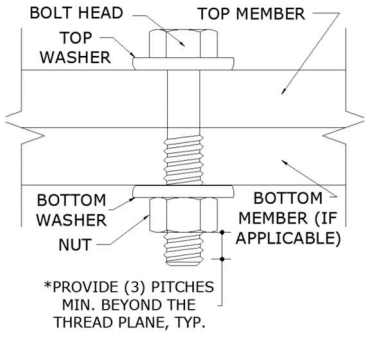

SAMPLE THRU-BOLT

SCALE: NTS SECTION VIEW

The term “Thru-Bolt” or through bolt, if used herein, refers to a bolt passing through the member(s) in contact and is fastened by a nut at the end opposite the screw head. Nut shall be equivalent to or exceed the strength of the bolt U.N.O. Nut shall be sized to accommodate the same nominal diameter as the bolt U.N.O. See diagram above-right for a sample thru-bolt configuration. For instances herein which list material specifications as *“[material type] or stronger”:* U.N.O. herein, the term “stronger” refers to a material with a UTS value equal to or greater than the UTS value of the stated material type. Consult appropriate literature for established material UTS values. Equivalent steel gauge thicknesses as used in this evaluation, U.N.O., are as follows: 22 GA (.030”), 20 GA (.036”), 18 GA (.048”), 16 GA (.060”), 14 GA (.075”), 12 GA (.098”).

LIMITATIONS & CONDITIONS OF USE, CONTINUED

Use of this product shall be in strict accordance with this product evaluation as noted herein. The supporting host structure shall be designed to resist all superimposed loads as determined by others on a site-specific basis as may be required by the authority having jurisdiction. Host structure conditions which are not accounted for in this product’s respective anchor schedule shall be designed for on a site-specific basis by a registered Professional Engineer. No evaluation is offered for the host supporting structure by use of this document. Adjustment factors noted herein and the applicable building codes must be considered, where applicable. Product components shall be of the material(s) specified in the manufacturer-provided product specifications. **For permanent outdoor installations, all exposed anchors, fasteners, connectors, and metal plates shall be corrosion resistant. Corrosion resistance may be provided by inherent material composition or, where permitted by code, by an approved protective coating or galvanization. Where applicable near a saltwater coastline, such components shall comply with FBC Section 1711, including applicable requirements for exposed, protected, or enclosed conditions. Materials, coatings, and finishes shall be compatible with connected materials, and protective coatings shall be continuous over exposed surfaces. Fasteners used with aluminum members shall also comply with Section J.3.7.2 of the Aluminum Design Manual, “Specification for Aluminum Structures.” Substitution of components from alternate manufacturers, or with different materials, coatings, or finishes, shall not be assumed equivalent and may require additional engineering review or site-specific analysis.** All fasteners and anchors shall be installed in accordance with the applicable provisions specified herein in addition to the anchor/fastener manufacturers’ published installation instructions. *Fasteners must penetrate (3) pitches minimum beyond the thread plane of the connecting members in contact. For thru-bolt connections, provide (3) pitches minimum beyond end of nut. For screw connections, provide (3) pitches minimum beyond the bottom member. See Sample Thru-Bolt Detail herein.

All of the wind-resisting exterior panels (with accompanying retrofits) individually meet or exceed their capacity to resist the design wind loads as stated in the calculations as required by the codes and standards stated herein. Due to the indeterminate nature of these units, distortion, deflection, and material deformation cannot be accurately evaluated, but with the diaphragm action of external components and internal stiffeners, the base unit (with accompanying retrofits stated herein as applicable) has the capacity to withstand the design wind loads without detaching from the unit and becoming flying debris.

Survivability: This performance evaluation is valid for a newly installed unit and do not include certification of the product beyond a design event or if impacted by any debris. Inspections shall be implemented annually by the end user and after every named storm. All fasteners and cabinet components are to be verified, and all damaged, loose, corroded and/or broken fasteners and cabinet components shall be replaced to ensure structural integrity against hurricane wind forces. Contact this office for any reevaluation needs or as designated by the Authority Having Jurisdiction.

Durability: Components or component assemblies shall not deteriorate, crack, fail, or lose functionality due to galvanic corrosion or weathering. All supporting components which are permanently installed shall be protected against corrosion, contamination, and other such damage at all times. Each component or component assembly shall be supported and oriented in its intended installation position. All exposed plastic components shall be certified to resist sunlight exposure as specified by ASTM B117, or ASTM G155 in Broward or Miami Dade counties.

Extent of Certification: Certification pertains to the overall structural integrity of the unit components listed within the evaluation as required by code, subject to the limitations and criteria stated herein. Operability during or after a design event is not included in this certification. Water infiltration is outside the bounds of this certification. No other certifications are intended other than as described herein. This evaluation alone does not offer any evaluation for large missile impact debris or cyclic wind requirements unless specifically stated herein.

Proj. #	Remarks	By	Checked	Date	Proj. #	Remarks	By	Checked	Date
24-76223	Initial Issue	MARH	EPR	07/11/24	26-101536	2026 FBC Update	MRT	EPR	08/04/26
24-76223	Modify model numbers	MARH	EPR	11/25/24					

APPENDIX A: DESIGN WIND PRESSURE GUIDE

Max. Ult. Wind Speed (V_{ult})	Max. MRH (Roof Height)	Exposure Category	Required Design Wind Pressures (ASD)	
			Lateral Pressure	Uplift Pressure
140 mph	At-Grade (0 ft)	C	± 26 psf	0* psf
		D	± 31 psf	0* psf
	100 ft	C	± 63 psf	50 psf
		D	± 71 psf	56 psf
	200 ft	C	± 72 psf	57 psf
		D	± 80 psf	63 psf
175 mph	At-Grade (0 ft)	C	± 40 psf	0* psf
		D	± 49 psf	0* psf
	100 ft	C	± 98 psf	77 psf
		D	± 111 psf	87 psf
	200 ft	C	± 113 psf	89 psf
		D	± 124 psf	98 psf
186 mph	At-Grade (0 ft)	C	± 46 psf	0* psf
		D	± 54 psf	0* psf
	100 ft	C	± 111 psf	87 psf
		D	± 125 psf	99 psf
	200 ft	C	± 127 psf	100 psf
		D	± 140 psf	111 psf

~~100 psf~~ Note: Any table values with the format shown left, if present, indicate design wind pressures and site conditions that are **not approved for use** by this evaluation. Seek additional engineering or contact this firm for design solutions.

DIRECTIVE: This design pressure guide is for reference only and shall be approved for use by the Authority Having Jurisdiction (AHJ). If the design pressures listed in this guide are not used, required design pressures shall be calculated separately. For site-specific scenarios classified as Exposure Category B, the required design pressures stated for Exposure Category C in the above guide shall be used or design pressures shall be calculated separately. For heights and parameters beyond the parameters listed in this guide, visit our Online Calculator via the website link (https://ecalc.io/forces) or QR Code below, or obtain calculations separately by others.

The required ASD design pressures listed in this guide were calculated per the table's listed corresponding site conditions. The project design professional or permitting contractor shall verify that the site-specific conditions are equal to or less than the approved design parameters listed in the guide. Per the note below table: any values shown as "~~XX psf~~", indicate wind pressures and corresponding site conditions that are **not valid for use** with this evaluation (exceeds the max. rated pressures).

*Note: Per the codes and standards referenced herein, uplift is not required for mechanical equipment at-grade. If uplift at-grade is required by the AHJ, contact this firm for a site-specific evaluation.

At-Grade (0 ft MRH) Required Design Pressures:

- ASCE 7 "Design Wind Loads: Other Structures"
- Structure Shape = Square, flat terrain
- Height of structure (unit + stand or curb, if used) = 6 ft max.
- Width of unit = 1 ft min., Depth of unit = 11 in min.

Rooftop (>15 ft MRH) Required Design Pressures:

- ASCE 7 "Design Wind Loads: Other Structures: Rooftop Structures and Equipment for Buildings"
- Structure Shape = Square, flat terrain
- z = up to 7 ft, where z = height of stand or curb + ½ unit height
- Lateral GC_f = 1.90; Uplift GC_f = 1.50

VISIT ECALC.IO/FORCES

FOR DESIGN AID CALCULATORS AND RESOURCES RELATED TO THIS EVALUATION & GUIDES HEREIN, OR SCAN THE QR CODE RIGHT >

UNIT REACTIONS FROM WIND GUIDE

DIRECTIVE: This guide is intended for use by a design professional. Design parameters shall abide all specifications and limitations stated in this evaluation. Design professional shall consider all forces, including seismic and snow loads, per the governing building code. Unit reactions obtained from this guide shall be verified by a registered Professional Engineer. Reactions are applicable for unit-to-host connections only. Sample calculations are provided below.

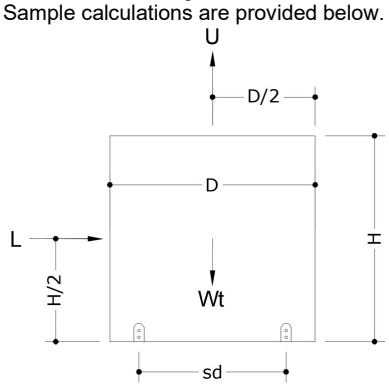

Design Parameters:

- Lateral Wind Pressure, P_lat
- Unit Height, H
- Unit Width, W
- Support Spacing across Depth, sd
- Uplift Wind Pressure, P_up
- Unit Depth, D
- Unit Weight, Wt
- Support Spacing across Width, sw

Unit Reaction Equations:

Long Side (Width x Height):

- Sliding Force, L = P_lat x W x H
- Uplift Force, U = P_up x W x D
- Total Tension per Long Side =
(L x H/2 + U x sd/2 – Wt x 0.6 x sd/2) / sd

Short Side (Depth x Height):

- Sliding Force, L = P_lat x D x H
- Uplift Force, U = P_up x W x D
- Total Tension per Short Side =
(L x H/2 + U x sw/2 – Wt x 0.6 x sw/2) / sw

Example: A (48" W x 36" D x 42" H), 250 lb net weight unit at wind pressures of 120 psf lateral and 95 psf uplift, on a 24" wide roof stand, shall have the following unit reactions:

Long Side (Width x Height):

1. Sliding Force, L = P_lat x W x H
   = (120 psf) x (48 in) x (42 in) x (1 in^2 / 144 ft^2) = **1680 lb**
2. Uplift Force, U = P_up x W x D
   = (95 psf) x (48 in) x (36 in) x (1 in^2 / 144 ft^2) **= 1140 lb**
3. Total Tension per Long Side =
   = (L x H/2 + U x sd/2 – Wt x 0.6 x sd/2) / sd
   = ((1680 lb x 42/2 in) + (1140 lb x 24/2 in) – (250 lb x 0.6 x 24/2 in)) / 24 in **= 1965 lb**

Short Side (Depth x Height):

1. Sliding Force, L = P_lat x D x H
   = (120 psf) x (36 in) x (42 in) x (1 in^2 / 144 ft^2) **= 1260 lb**
2. Uplift Force, U = P_up x W x D
   = (95 psf) x (48 in) x (36 in) x (1 in^2 / 144 ft^2) **= 1140 lb**
3. Total Tension per Short Side =
   = (L x H/2 + U x sw/2 – Wt x 0.6 x sw/2) / sw
   = ((1260 lb x 42/2 in) + (1140 lb x 48/2 in) – (250 lb x 0.6 x 48/2 in)) / 48 in **= 1046 lb**

IN ALL CONDITIONS IT IS THE RESPONSIBILITY OF THE PERMIT HOLDER TO ENSURE THE HOST STRUCTURE IS CAPABLE OF WITHSTANDING THE RATED GRAVITY, LATERAL, AND UPLIFT FORCES BY SITE-SPECIFIC DESIGN. NO WARRANTY OF ANY KIND, EXPRESSED OR IMPLIED, IS OFFERED BY ENGINEERING EXPRESS AS TO THE INTEGRITY OF THE HOST STRUCTURE TO CARRY DESIGN FORCE LOADS INCURRED BY THIS UNIT.