ENGINEERING EXPRESS®

ENGINEERINGEXPRESS.COM | (954) 354-0660
POSTAL ADDRESS:
2234 NORTH FEDERAL HWY #7664
BOCA RATON, FL 33431

Performance Evaluation

Florida Statewide Product Approval (FSA) # FL 46980.1
Engineering Express Project # 26-101535
THIS DOCUMENT CONTAINS (15) PAGES.

EVALUATION SUBJECT: CFP-NFP SERIES PACKAGED UNITS

FL # 46980.1

REPORT HOLDER:
RHEEM SALES COMPANY, INC.
800 INTERSTATE PARK DR
MONTGOMERY, AL 36109, USA
(770) 351-3000 | RHEEM.COM

SCOPE OF EVALUATION (compliance with the following codes):

THIS IS A STRUCTURAL (WIND) PERFORMANCE EVALUATION ONLY. NO ELECTRICAL OR TEMPERATURE PERFORMANCE RATINGS OR CERTIFICATIONS ARE OFFERED OR IMPLIED HEREIN.
UNDER NO CIRCUMSTANCE DOES THIS PERFORMANCE EVALUATION GUARANTEE, IMPLY, OR STATE PERFORMANCE OF THE UNIT IS MAINTAINED DURING OR AFTER A DESIGN EVENT.

This Performance Evaluation is being issued in accordance with the requirements of the **Florida Building Code Ninth Edition (2026)** per ASCE 7, FBC Building Ch. 16, FBC Building Sections 104.11 & 1522.2, FBC Existing Building Sections 707.1 & 707.2, FBC Mechanical 301.15, FBC Residential M1202.1 & M1301.1, and FS 471.025. The product noted in this performance evaluation has been tested and/or evaluated as summarized herein.

SUBSTANTIATING DATA:
• Product Evaluation Documents
Substantiating documentation has been submitted to provide this performance evaluation and is summarized in the sections below.
• Structural Engineering Calculations
Structural engineering calculations have been prepared which evaluate the product based on comparative and/or rational analysis to qualify the following design criteria:

- Max. allowable lateral & uplift wind pressures certified herein
- Max. allowable sliding forces, uplift forces, & overturning moments (see Unit Reactions from Wind Guide on last page)
- Tie-down configuration and anchor capacity for concrete, aluminum, and steel host substrates (host by others).
- Unit panel wind pressure connection integrity

Calculation summary is included in this product evaluation and appears herein.

LIMITATIONS & CONDITIONS OF USE:
Use of the product(s) listed herein shall be in strict accordance with this product evaluation as noted herein and manufacturer-provided model specifications. Installation shall conform to the minimum standards stated in the referenced building code(s) in addition to the specifications and limitations stated herein. See herein for complete limitations & conditions of use.

OPTIONS:
This evaluation is valid for the models described herein. The critical unit designs have been determined and used in this evaluation. Any structural changes outside of the design as described herein would void this certification.

UNIT CASING MATERIALS:
Exterior panels and unit base shall be constructed of UTS = 36 ksi min. (or 250 MPa min.) galv. steel. Exterior panels shall be 20 GA min. thick. Unit base rail shall be 18 GA min. thick. Exterior panels shall be secured with #8 (0.164") min. Ø, SAE Gr. 2 min. or SS sheet metal screws. Contact Report Holder for further unit construction information..

TERMINOLOGY:
See herein for definitions of terms and abbreviations used in this evaluation.

NOTE: THE GRAPHICAL DEPICTIONS IN THIS EVALUATION ARE FOR ILLUSTRATIVE PURPOSES ONLY AND MAY DIFFER IN APPEARANCE.

STRUCTURAL PERFORMANCE:
Models referenced herein are subject to the following design limitations:

Maximum-Rated ASD Wind Pressures*:
± 140 psf Lateral, 111 psf Uplift

- Required design wind pressures shall be determined according to the guide provided in the Appendix (see last page of this document) or on a site-specific basis in accordance with ASCE 7 and applicable sections of the building code(s) being referenced in accordance with ASD methodology.
- Required design wind pressures shall be less than or equal to the maximum pressures listed herein.
- *Maximum Rated Wind Pressures indicate the maximum pressures that all units listed herein are approved for. Valid for at-grade and rooftop applications. See limitations herein.
- Valid for use inside and outside the High-Velocity Hurricane Zone (HVHZ).
- Site-specific wind analysis may produce alternate limitations provided that the maximum-rated wind pressures stated herein are not exceeded.

VISIT ECALC.IO/RHEEM
FOR MORE INFORMATION AND DEVIATIONS TO THIS EVALUATION OR SCAN THE QR CODE TO THE RIGHT >

Engineer Signature & Seal:

COLBY BENNARDO LICENSE No 95197 STATE OF FLORIDA PROFESSIONAL ENGINEER

Digitally signed by Colby Bennardo
Date: 2026.08.17 11:25:13 -04'00'

August 14, 2026

Colby Bennardo, P.E.
ENGINEERING EXPRESS®
FL PE #95197 FLCA #9885

*PRINTED COPIES OF THIS DOCUMENT ARE NOT CONSIDERED SIGNED & SEALED. SIGNATURE MUST BE VERIFIED ON ANY ELECTRONIC COPIES.
***FOR FLORIDA STATEWIDE PRODUCT APPROVALS (FSAs) REGISTERED & APPROVED WITH THE STATE OF FLORIDA:** ORIGINAL, SEALED COPIES OF APPROVED FLORIDA PRODUCT APPROVALS ARE NOT REQUIRED FOR PERMIT. SEE **ECALC.IO/SEAL** TO LEARN MORE.

MODEL INFORMATION

Cabinet Group	Unit Dimensions (in)		
	Width	Depth	Height
CFP36	52.438	47.500	35.938
CFP41	52.438	47.500	41.000
NFP41	57.500	47.500	41.000

Model Number	Cabinet Group
*ACA**024	CFP36
*ACA**030	
*ACA**036	
*GEA**024	
*GEA**030	
*GEA**036	
*HPA**024	

Model Number	Cabinet Group
*ACA**036	CFP41
*ACA**042	
*ACA**048	
*ACA**060	
*GEA**036	
*GEA**042	
*GEA**048	
*GEA**060	
*HPA**030	
*HPA**036	
*DFA**024	

Model Number	Cabinet Group
*ACX**048	NFP41
*ACX**060	
*GEX**048	
*GEX**060	
*HPX**024	
*HPX**030	
*HPX**036	
*HPX**042	
*HPX**048	
*HPX**060	
*DFX**036	
*DFX**048	
*DFX**060	

MODEL INFORMATION NOTES

"Cabinet" designations as shown in the Model Information tables are based on the Cabinet Group and unit height for the model in question. The Cabinet Group shall be either "CFP" or "NFP", as defined herein. Cabinet Group is determined by the manufacturer. See Details herein. Unit height as listed in the "Cabinet" designation is the approximate net unit height (rounded to the nearest inch). Example: "CFP 36" cabinet designation is for a "CFP" Cabinet Group model that is approximately 36" tall.

Unit dimensions listed above are unit net/operating dimensions (as opposed to packing/shipping dimensions). Unit net/operating weights (as opposed to gross/packaged/shipping weights) shall be between 380 lb and 550 lb, typ.

Model number characters marked by an asterisk (*) do not pertain to this structural certification and may be any combination of number and/or letters.

The model information listed herein is based on information provided by the client. See Details 1-4 herein for definitions of Cabinet Group, unit dimensions, and panel designations (related to the Panel Integrity evaluation summarized herein). Unit appearance may vary. Please contact Report Holder for more information.

REMAINDER OF PAGE INTENTIONALLY LEFT BLANK

DETAILS 1 & 2: CFP CABINET GROUP

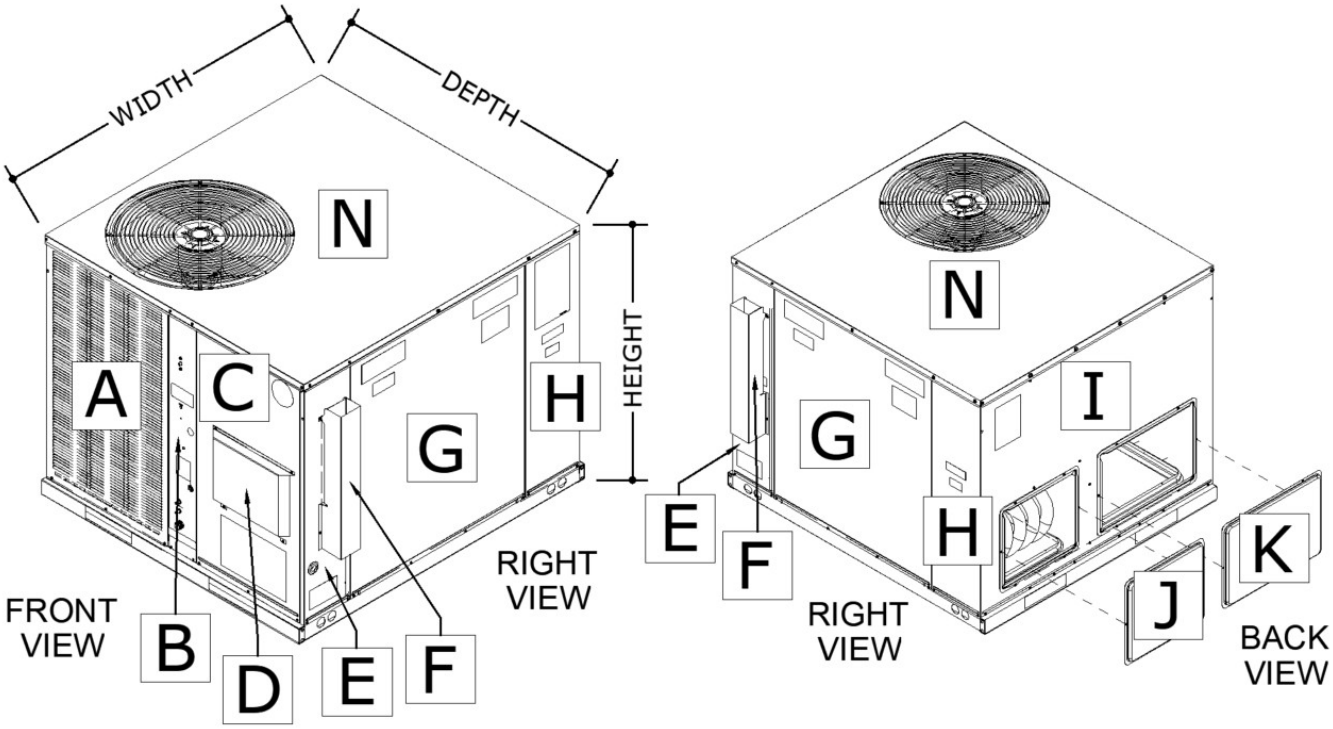

1 CFP DIMENSIONS & PANEL DESIGNATIONS
SCALE: NTS MULTIPLE VIEWS

DETAILS 1 & 2 NOTES: CFP CABINET GROUP

Panel layouts as designated above by the boxed call-outs above (e.g. “A”, “B”, etc.) are as follows:

The unit’s front side is composed of three main panels: a left-hand louvered panel, termed the “Outdoor Coil Protective Grille” and designated Panel “A”, a narrower middle solid panel, designated Panel “B”, and a wider right-hand solid panel, designated Panel “C”. For gas models only, Panel “C” has a middle cover panel, termed the “Combustion Air Inlet Hood” and designated Panel “D”.

The unit’s right side is composed of three main panels: a narrower left-hand solid panel, designated Panel “E”, a larger middle solid panel, termed the “Blower/Evaporator Access Panel” and designated Panel “G”, and a narrower right-hand solid panel, designated Panel “H”. For gas models only, Panel “E” has a “Flue Exhaust Hood” which is designated as Panel “F”.

The unit’s back side is composed of a single main panel, designated Panel “I”. Panel “I” has two cover panels: a left-hand, smaller cover panel covering the “Side Supply Duct Opening” and designated Panel “J”, and a right-hand, larger cover panel covering the “Side Return Duct Opening” and designated Panel “K”.

The unit’s left side is composed of two main panels: a left-hand solid panel, termed the “Filter Access Panel” and designated Panel “L”, and a right-hand louvered panel, termed the “Outdoor Coil Protective Grille” and designated Panel “M”.

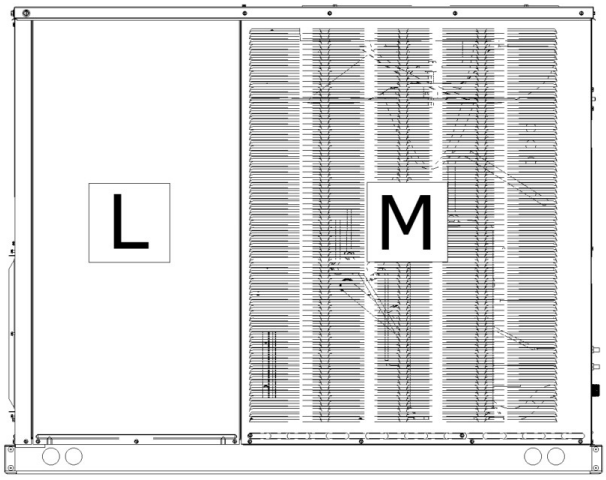

2 CFP DIMENSIONS & PANEL DESIGNATIONS
SCALE: NTS LEFT VIEW

The unit’s top side is composed of a singular top panel, designated Panel “N”, that covers all side wall panels and forms the roof of the unit.

The unit’s smaller panels and fan grille were considered in the Panel Integrity analysis summarized herein but may not be specifically designated above. Unit appearance may vary slightly. See the Panel Integrity section herein.

DETAILS 3 & 4: NFP CABINET GROUP

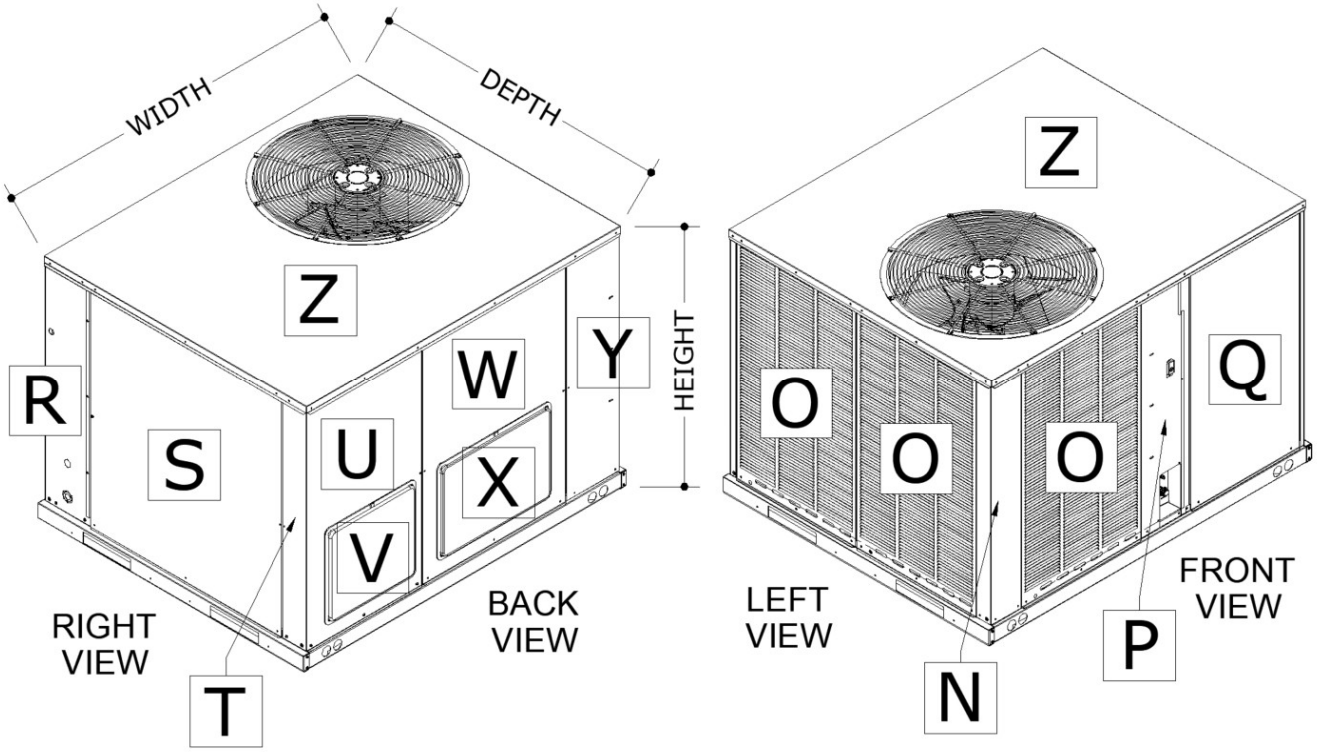

3 NFP DIMENSIONS & PANEL DESIGNATIONS
SCALE: NTS MULTIPLE VIEWS

DETAIL 3 & 4 NOTES: NFP CABINET GROUP

Panel layouts as designated above by the boxed call-outs above (e.g. “N”, “O”, etc.) are as follows:

The unit’s front side is composed of four main panels: at the left-most end is a solid corner panel, designated Panel “N”, a louvered panel, termed the “Outdoor Coil Protective Grille” and designated Panel “O”, a narrower middle solid panel, designated Panel “P”, and a wider right-hand solid panel, termed the “Control Access Panel” and designated Panel “Q”. For gas models only, Panel “Q” has a middle cover panel, termed the “Combustion Air Inlet Hood” and designated Panel “Q*”.

The unit’s right side is composed of three main panels: a narrower left-hand solid panel, designated Panel “R”, a larger middle solid panel, termed the “Blower/Evaporator Access Panel” and designated Panel “S”, and a narrower right-hand solid panel, designated Panel “T”. For gas models only, Panel “R” has a “Flue Exhaust Hood” which is designated as Panel “R*”.

The unit’s back side is composed of three main panels: a left-hand solid panel, designated Panel “U”, a larger middle solid panel, designated Panel “W”, and a right-hand corner panel, designated Panel “Y”. Panel “U” has a cover panel covering the “Side Supply Duct Opening”, which is designated Panel “V”. Panel “W” has a cover panel covering the “Side Return Duct Opening”, which is designated Panel “X”.

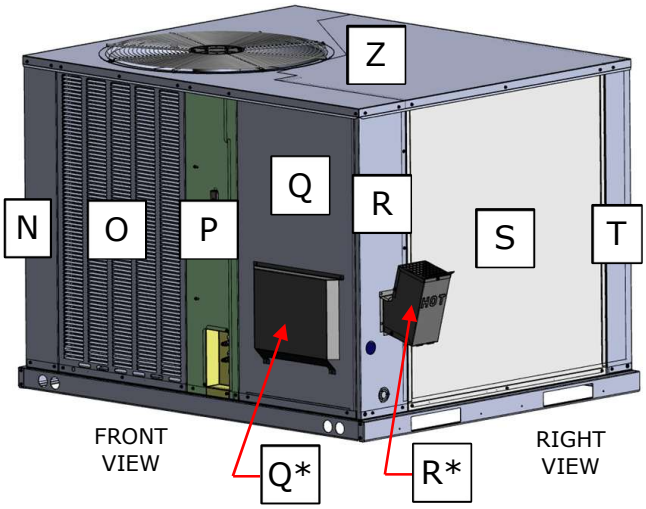

4 NFP DIMENSIONS & PANEL DESIGNATIONS (GAS MODELS ONLY)
SCALE: NTS FRONT-RIGHT ISOMETRIC VIEW

The unit’s left side is composed of two main panels: a left-hand louvered panel and a right-hand louvered panel, each termed the “Outdoor Coil Protective Grille” and designated Panel “O”. (Panels were considered to be identical to each other and the Panel “O” on the unit’s front side).

The unit’s top side is composed of a singular top panel, designated Panel “Z”, that covers all side wall panels and forms the roof of the unit.

The unit’s smaller panels and fan grille were considered in the Panel Integrity analysis summarized herein but may not be specifically designated above. Unit appearance may vary slightly. See the Panel Integrity section herein.

TIE-DOWN SCHEDULE

Installation Condition	Max. ASD Wind Pressures Lateral (Uplift)	Anchor Schedule to Host Structure By Others		# of Tie-Down Clips Required	# of Tie-Down Straps Required	# of Anchors per Long Side	# of Anchors per Short Side
		f'c = 3000 psi min. Regular-Weight Concrete Host	16 GA min. thick UTS = 58 ksi min. Galv. Steel Curb				
At Grade	± 54 psf (0 psf)	A	N/A	6	0	3	0
At Grade or Rooftop	± 80 psf (64 psf)	N/A	B	N/A	2	2	2
	± 110 psf (87 psf)	N/A	B	N/A	2	3	4
	± 140 psf (111 psf)	N/A	B	N/A	4	4	4

TIE-DOWN SCHEDULE NOTES (Continued Next Page)

TIE-DOWN SCHEDULE DIRECTIVE: The Tie-Down Schedule table above is divided into maximum wind pressure tiers (each row of the table). Site-specific wind pressures up to ± 54 psf lateral & 0 psf uplift shall use, at minimum, the tie-down specifications as stated in the ± 54 psf lateral (0 psf uplift) pressure tier row. Site-specific wind pressures that fall in-between pressure tiers shall use, at minimum, the tie-down specifications as specified by the higher pressure tier. Ensure the host structure by others meets the minimum specifications as stated in the Anchor Schedule section of the table. The Tie-Down Schedule applies to all units described in this evaluation. See tie-down specifications and Details herein. Contact Engineering Express for site scenarios outside the bounds of this evaluation.

Example 1: Say your installation is at-grade, with site-specific wind pressures of ± 45 psf lateral and 0 psf uplift. In this case, you would need to follow, at minimum, the tie-down specifications corresponding to the ± 54 psf (0 psf) wind pressure tier row. This row only permits anchoring to concrete host structures. If your host structure is a steel curb, you would need to use, at minimum, the tie-down specifications corresponding to the ± 80 psf (64 psf) wind pressure tier row.

Example 2: Say your installation is rooftop, with site-specific wind pressures of ± 96 psf lateral and 76 psf uplift. In this case, you would need to follow, at minimum, the tie-down specifications corresponding to the ± 110 psf (87 psf) wind pressure tier row. This row permits anchoring to steel curbs only. Anchoring to a concrete host structure would not be permitted in this example.

ANCHOR SCHEDULE NOTES: In all cases, the host structure is by others. Anchor shall be selected per site-specific wind pressures and host structure substrate. Anchor specifications as represented in the Tie-Down Schedule are as follows:

A: 1/4" Ø ITW Tapcon or equivalent with 5/8" min. OD washer, 1-3/4" embedment, 2" min. edge distance to the edge of the concrete, and 4-1/4" min. spacing from neighboring concrete anchors, typ. Utilize (1) anchor per tie-down clip. See "Tie-Down Clip Notes" below for additional specifications.

B: 3/8" Ø, SAE Gr. 5 or stronger UNC screw. Install into the unit base rail and steel curb, full perimeter around the unit (front, back, left, and right sides) per the quantities listed in the Tie-Down Schedule. "Unit long sides" are along the unit width and "unit short sides" are along the unit depth, as defined in this report. See Details 1 and 3 herein. Ensure the threaded portion of the screw engages the steel curb (5) pitches minimum past the thread plane, typ.

For each unit side: position (2) of the specified anchor quantity between 6" and 12" from the end of the base rail, (1) per end, typ. Distribute the remaining screw quantity (if applicable) in between the (2) end screws evenly spaced as much as is feasible. Provide 3/4" min. edge distance to any edges/openings of unit base rail and 1-1/4" min. spacing from neighboring screws, typ. Also provide 3/4" min. edge distance to any edges of the steel curb. See tie-down to curb Details herein.

Example: The ± 110 psf lateral (87 psf uplift) tier requires (3) anchors per long side and (4) anchors per short side, (14) anchors in total.

N/A: Not applicable.

TIE-DOWN CLIP NOTES: Tie-down clips are not required for curb-mounted applications.

Tie-down clips shall be 1" min. wide, 4"-12" tall, 0.068" min. thick, UTS = 45 ksi min. (equiv. to ASTM A653 Gr. 33 or stronger) galv. steel. Fasten clip to host structure with (1) anchor per tie-down clip according to the "Anchor Schedule to Host Structure" specifications stated herein. Ensure anchor is placed at the center of the tie-down clip leg to provide 1/2" min. edge distance, typ. Fasten clip to unit base rail with (4) #10, SAE Gr. 2 min. or SS self-drilling screws with 1/2" min. OD washers, typ. Utilize (4) slots that have flush, solid contact with the unit, (1) screw per slot, typ. Care must be taken to avoid screw contact with internal piping and components. Exercise caution with screw installation. Ensure all screws fully engage with the unit. Tie-down clips shall sit flush on the host structure and flush against the unit. See tie-down clip details herein.

Distribute the specified tie-down clip quantity evenly between the unit long sides. For each unit long side, position tie-down clips evenly along the unit side as much as is feasible. Position tie-down clips 3" minimum away from either end of the unit. Ensure adequate anchor spacing and flush contact are achieved when positioning tie-down clips. See tie-down clip details herein.

TIE-DOWN SCHEDULE NOTES CONTINUED NEXT PAGE

TIE-DOWN SCHEDULE NOTES (Continued from Previous Page)

TIE-DOWN STRAP NOTES: For at-grade installations to concrete host structures up to ± 54 psf lateral & 0 psf uplift wind pressures, tie-down straps are not required.

Tie-down straps shall be 1" min. wide x 20 GA (.036") min. thick, UTS = 45 ksi min. (equiv. to ASTM A653 Gr. 33 or stronger) galv. steel. Position (2) tie-down straps at either end of the unit long sides, (1) each end, 6" minimum away from the unit short side edge, typ. For scenarios in which additional tie-down straps are required beyond (2) straps, position the additional straps in-between the (2) end straps evenly spaced as much as is feasible. See the Tie-Down Details herein

Wrap each tie-down strap over the long sides and top of the unit and attach each strap end to the vertical face of the steel curb. Attach each strap end to the host structure member with (3) #14 (1/4" Ø), SAE Gr. 2 min. or SS SMS with 3/4" min. spacing between screws and 3/8" min. edge distance to any edge of the strap and vertical face of the curb, typ. See the Tie-Down Details herein.

Tie-down strap lengths shall be determined by the installing contractor. Ensure strap lengths are such that the strap is neither excessively taut nor excessively slack once installed. A secure fit should be achieved. Neoprene pads may be placed between the unit and the strap to protect the unit from damage/distortion.
Straps may be removed for maintenance purposes but shall be replaced per the attachment directive herein following maintenance. **Tie-down straps must be in place before any named storm or similar high-wind event.**

TIE-DOWN DETAILS, 5 – 7
(For At-Grade Applications to Concrete)

TIE-DOWN DETAILS, 5 – 7 NOTES

For each Detail in this section, consult the Tie-Down Schedule and Notes herein for all tie-down components & specifications required.

The units depicted in the Details on this page are for illustrative purposes only. Units may vary in appearance. Tie-down system may not be depicted in full. The sample tie-down layouts shown herein are for illustrative purposes only. Tie-down locations may vary per the specifications of the Tie-Down Schedule and Notes herein. Host structure shape may vary.

For Details 6 and 7: two common tie-down clip options are shown (1" wide and 2" wide tie-down clips) as examples. Any tie-down clip may be used so long as it complies with the Tie-Down Schedule and Notes specifications.

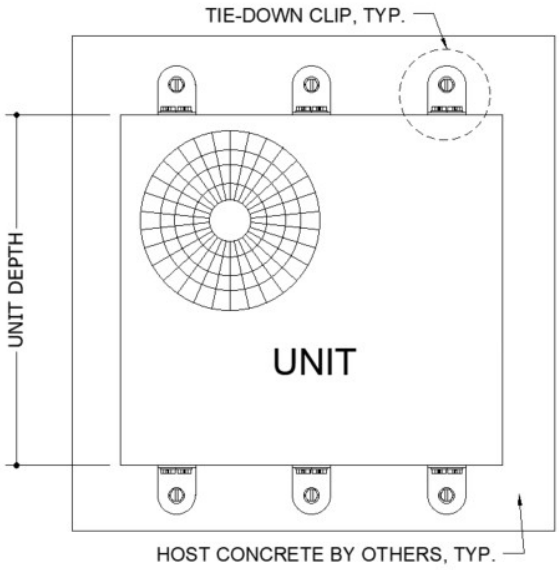

5 SAMPLE TIE-DOWN LAYOUT TO CONCRETE, TYP.
SCALE: NTS PLAN VIEW

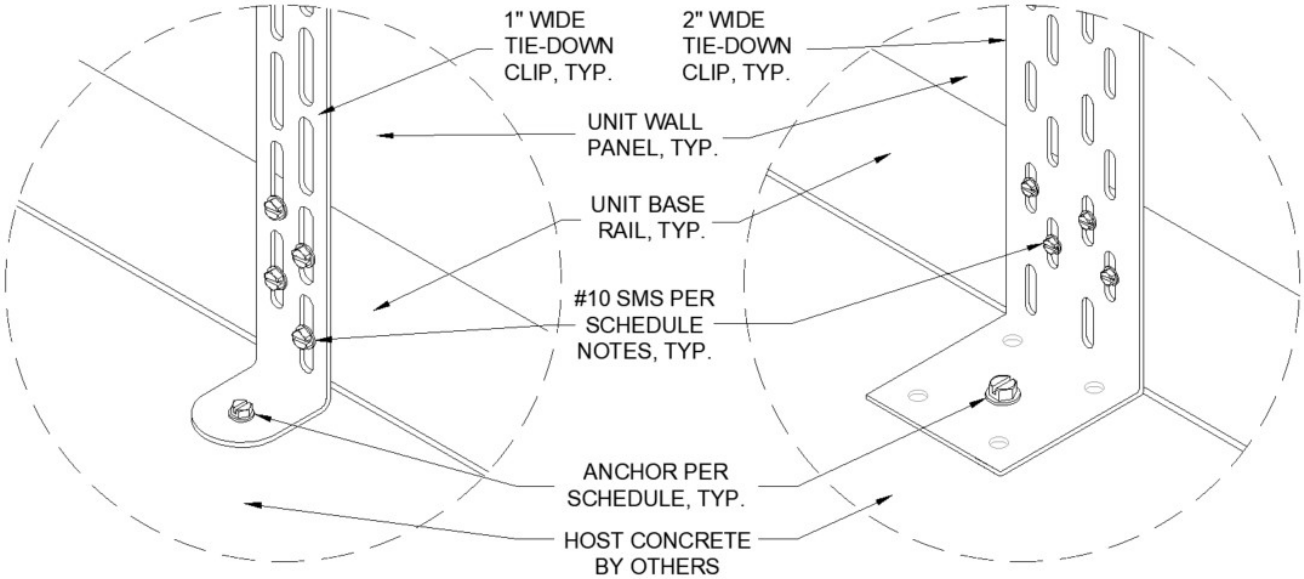

6 1" WIDE TIE-DOWN CLIP ATTACHMENT, TYP.
SCALE: NTS ISOMETRIC VIEW

7 2" WIDE TIE-DOWN CLIP ATTACHMENT, TYP.
SCALE: NTS ISOMETRIC VIEW

TIE-DOWN DETAILS, 8 - 10 (*For Rooftop Applications to Steel Curb)

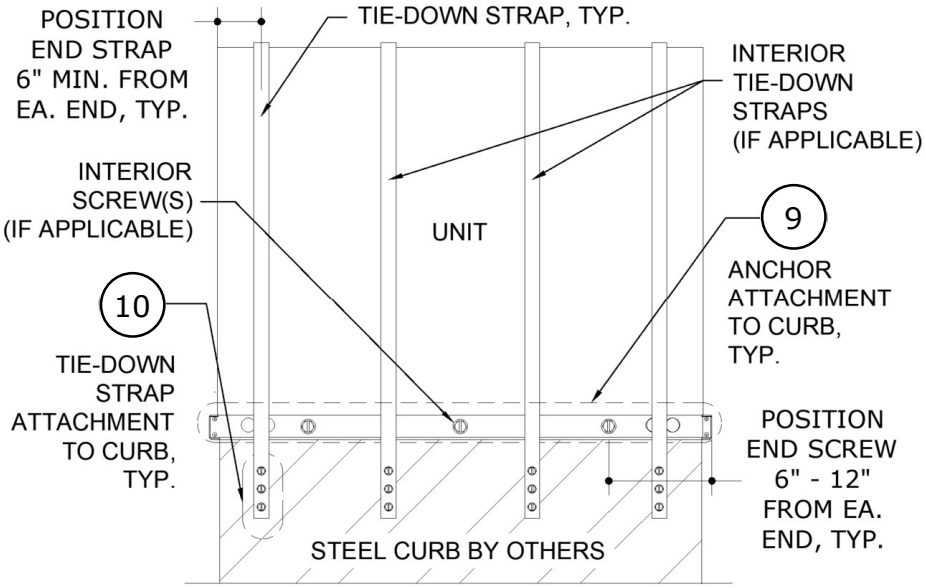

9 SAMPLE TIE-DOWN LAYOUT TO CURB, TYP.
SCALE: NTS PLAN VIEW

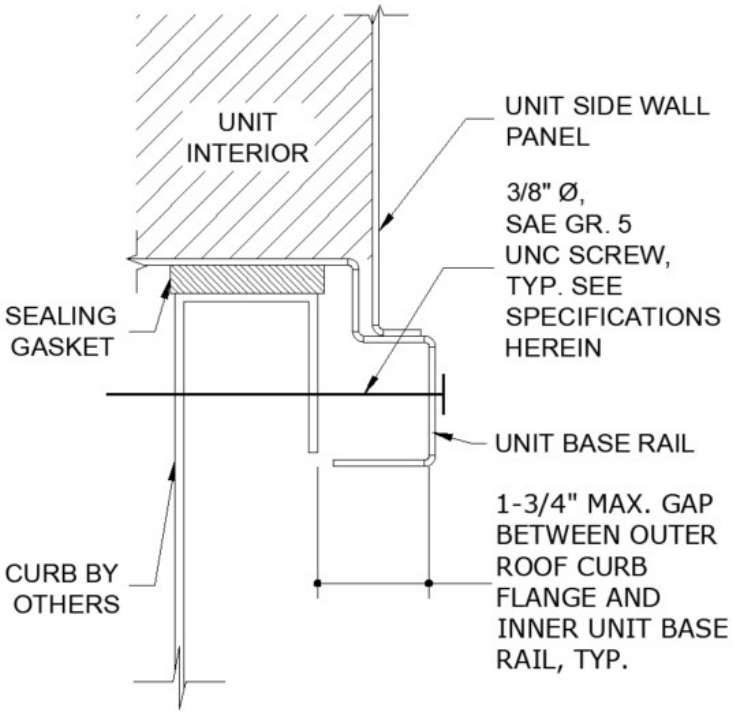

9 UNIT ATTACHMENT TO CURB
SCALE: NTS TOP VIEW

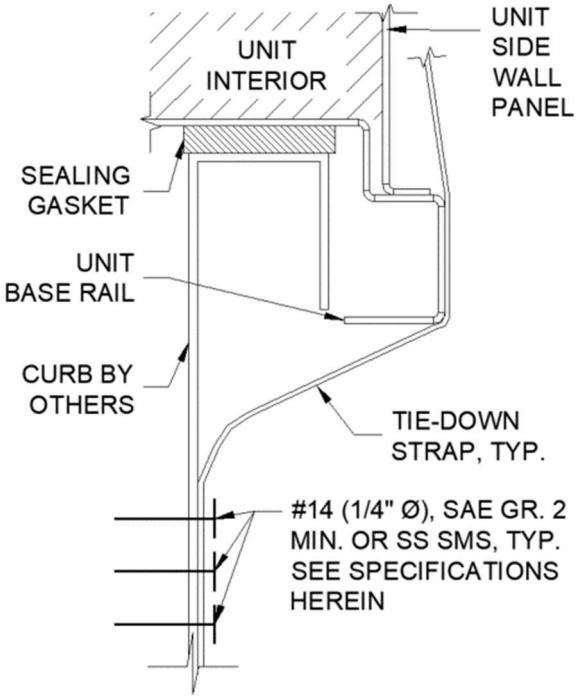

10 TIE-DOWN STRAP ATTACHMENT TO CURB, TYP.
SCALE: NTS TOP VIEW

TIE-DOWN DETAILS, 8 - 10 NOTES

*NOTE: Details 8 - 10 may also apply for at-grade applications to steel curbs up to ± 54 psf lateral and 0 psf uplift. **For each Detail in this section, consult Tie-Down Schedule and Notes herein for all tie-down components & specifications required.**

The units depicted in the Details on this page are for illustrative purposes only. Units may vary in appearance. Tie-down system may not be depicted in full. The sample tie-down layouts shown herein are for illustrative purposes only. Tie-down locations may vary per the specifications of the Tie-Down Schedule and Notes herein. Host curb and unit base rail shapes may vary. Tie-down specifications shown in Details 9 and 10 shall be implemented in tandem as part of the tie-down system; they are shown separately in each Detail for clarity.

STAND MOUNT TIEDOWN OPTION

If stand mount option is required, unit-to-stand attachment shall be per detail 11 below. This detail is applicable for both at-grade and rooftop applications. Stand Integrity by others.

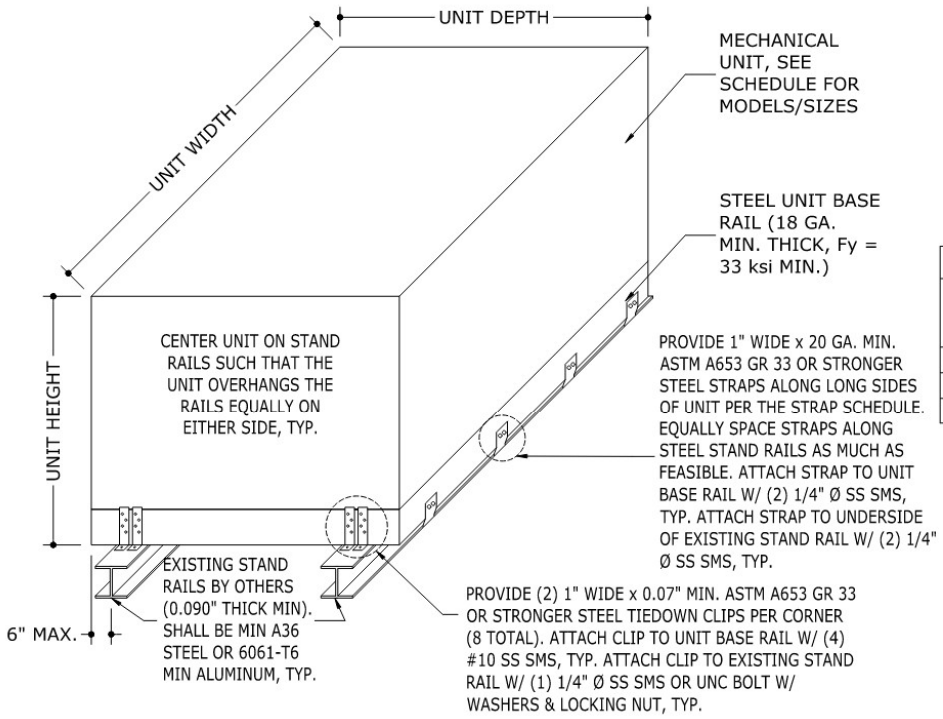

11 UNIT TO A/C STAND ATTACHMENT
SCALE: NTS

STRAP SCHEDULE	
LATERAL ASD DESIGN PRESSURE (PSF)	NO. OF STRAPS PER LONG SIDE
UP TO ±80	0
UP TO ±110	2
UP TO ±140	4

NOTES: FOR ALL STRAP FASTENERS, PROVIDE 3X FASTENER DIAMETER MIN. SPACING & 1.5X FASTENER DIAMETER MIN. EDGE DISTANCE TO ANY MEMBER IN CONTACT EDGE. STAGGER FASTENERS IF REQUIRED TO COMPLY WITH THIS REQUIREMENT.

REMAINDER OF PAGE INTENTIONALLY LEFT BLANK

PANEL INTEGRITY SUMMARY NOTES (Continued on Following Pages)

Panel integrity calculations were based on information provided by the client and manufacturer-listed specifications. Calculations are summarized for each Cabinet Group and are valid for all unit models of each Cabinet Group listed herein. Specifications from each Cabinet Group's Panel Integrity Summaries apply to all unit models with the corresponding Cabinet Group designation (see "Model Information" Section prior for Cabinet Group designations).

All exterior panels were considered in the calculations and are covered by this certification. Panels were assigned various porosities depending on the ratio of louver/aperture area to total panel area, for the purposes of calculating the acting wind force on each panel. Screw sizes, quantities on panels, and panel characteristics were considered based on client-provided information and additional conservative assumptions. Screw quantities were checked to reinforce unit panels as needed.

"Additional screws" are screws that are required to be installed ***in addition to*** the existing screws present as part of the original unit design(s) submitted to this office, unless noted otherwise (U.N.O.). It is the installing contractor's responsibility to ensure additional screws are installed on the unit as applicable. The purpose of additional screws is to ensure panel connection integrity, referred to herein as "panel integrity", is sufficiently validated, such that the panel in question can withstand a high-speed wind gust and not detach or otherwise become flying debris.

Additional screw(s) shall be #14 (1/4" nominal) minimum diameter, SAE Gr. 2 min. or SS SMS. 1000 hours of ASTM B117 with zero red rust is required for all additional screws. Position additional screw(s) as directed by the respective "Additional Screws Directive" specifications for the panel in question. Provide 1" min. spacing between neighboring screws (existing or additional). Unless noted otherwise, distribute the additional screws evenly spaced in line with the existing panel screws as much as is feasible. See diamond "◇" regions in the following Details for approximate screw locations. Validate that each additional screw joins the panel in question to the other specified member (as specified in the "Additional Screws Directive" where applicable).

REMAINDER OF PAGE INTENTIONALLY LEFT BLANK

PANEL INTEGRITY SUMMARY, CFP CABINET GROUP (Continued on Following Page)

No additional screws are required for CFP Cabinet models with wind pressures up to ± 72 psf lateral & 57 psf uplift.

For CFP Cabinet models with site-specific pressures greater than ± 72 psf lateral & 57 psf uplift, follow the directives and specifications as noted in the Panel Integrity Summary Tables below and the Panel Integrity Notes Section prior:

Up to ± 110 psf Lateral & 87 psf Uplift Wind Pressures		
Panel Designations	**Addtl. Screws Required**	**Additional Screws Directive**
Panel C	3	Install (2) addtl. screw(s) into at bottom of panel to join with the unit base. Install (1) addtl. screw(s) at top of panel to join with the roof panel.
Panel G (Blower/ Evaporator Access Panel)	4	Install (2) addtl. screw(s) into at bottom of panel to join with the unit base. Install (2) addtl. screw(s) at top of panel to join with the roof panel.
Panel L	3	Install (2) addtl. screw(s) into at bottom of panel to join with the unit base. Install (1) addtl. screw(s) at top of panel to join with the roof panel.
(10) Additional Screw Required in Total per Unit. Addtl. screws shall be #14 min. Ø, SAE Gr. 2 min. or SS SMS. See notes below for further specifications.		

Up to ± 140 psf Lateral & 111 psf Uplift Wind Pressures		
Panel Designations	**Addtl. Screws Required**	**Additional Screws Directive**
Panel C	5	Install (2) addtl. screw(s) into at bottom of panel to join with the unit base. Install (3) addtl. screw(s) at top of panel to join with the roof panel.
Panel E	1	Install (1) addtl. screw(s) into at bottom of panel to join with the unit base.
Panel G (Blower/ Evaporator Access Panel)	8	Install (4) addtl. screw(s) into at bottom of panel to join with the unit base. Install (4) addtl. screw(s) at top of panel to join with the roof panel.
Panel H	1	Install (1) addtl. screw(s) into at bottom of panel to join with the unit base.
Panel I	2	Install (1) addtl. screw(s) into at bottom of panel to join with the unit base. Install (1) addtl. screw(s) at top of panel to join with the roof panel.
Panel L	5	Install (2) addtl. screw(s) into at bottom of panel to join with the unit base. Install (3) addtl. screw(s) at top of panel to join with the roof panel.
(22) Additional Screw Required in Total per Unit. Addtl. screws shall be #14 min. Ø, SAE Gr. 2 min. or SS SMS. See notes below for further specifications.		

SEE NEXT PAGE FOR SAMPLE APPROXIMATE SCREW LOCATIONS

PANEL INTEGRITY SUMMARY, CFP CABINET GROUP (Continued from Previous Page)

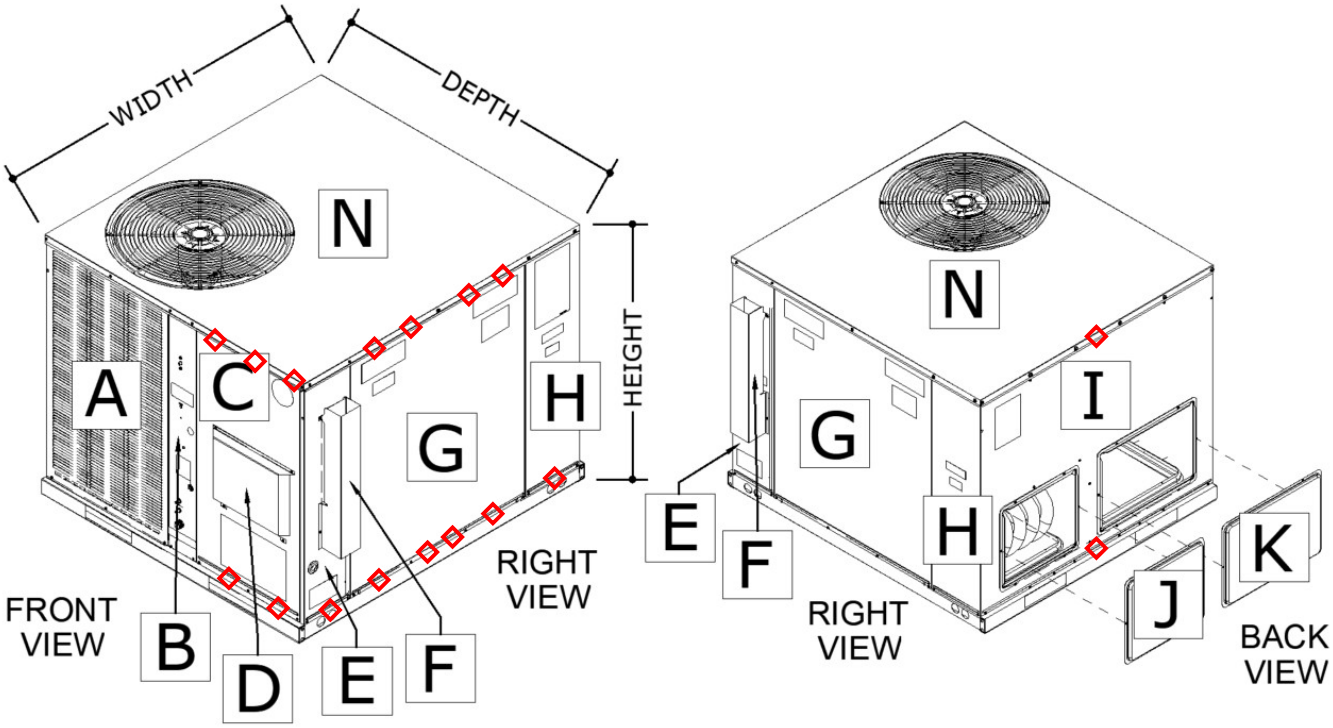

12 SAMPLE CFP ADDITIONAL SCREW LOCATIONS, TYP.
SCALE: NTS MULTIPLE VIEWS

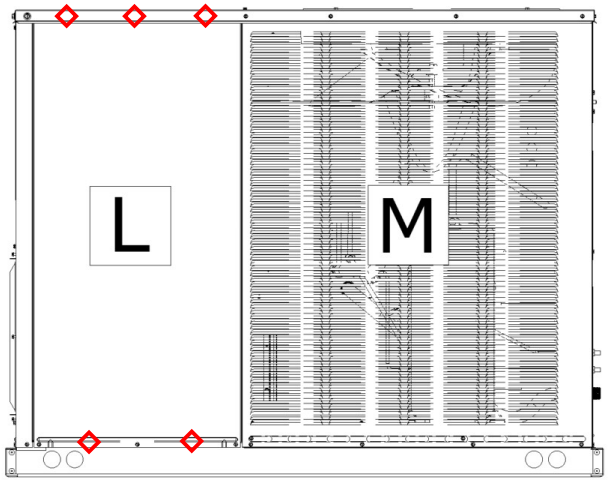

13 SAMPLE CFP ADDITIONAL SCREW LOCATIONS, TYP.
SCALE: NTS LEFT VIEW

PANEL INTEGRITY SUMMARY, NFP CABINET GROUP (Continued on Following Page)

No additional screws are required for NFP Cabinet models with wind pressures up to ± 68 psf lateral & 54 psf uplift.

For NFP Cabinet models with site-specific pressures greater than ± 68 psf lateral & 54 psf uplift, follow the directives and specifications as noted in the Panel Integrity Summary Tables below and the Panel Integrity Notes Section prior:

Up to ± 110 psf Lateral & 87 psf Uplift Wind Pressures		
Panel Designations	**Addtl. Screws Required**	**Additional Screws Directive**
Panel Q	3	Install (1) addtl. screw(s) at bottom of panel to join with the unit base. Install (2) addtl. screw(s) at top of panel to join with the roof panel.
Panel S	4	Install (2) addtl. screw(s) at bottom of panel to join with the unit base. Install (2) addtl. screw(s) at top of panel to join with the roof panel.
Panel U	1	Install (1) addtl. screw(s) at bottom of panel to join with the unit base.
Panel W	1	Install (1) addtl. screw(s) at top of panel to join with the roof panel.
(9) Additional Screw Required in Total per Unit. Addtl. screws shall be #14 min. Ø, SAE Gr. 2 min. or SS SMS. See notes below for further specifications.		

Up to ± 140 psf Lateral & 111 psf Uplift Wind Pressures		
Panel Designations	**Addtl. Screws Required**	**Additional Screws Directive**
Panel P	1	Install (1) addtl. screw(s) at top of panel to join with the roof panel.
Panel Q	5	Install (3) addtl. screw(s) at bottom of panel to join with the unit base. Install (2) addtl. screw(s) at top of panel to join with the roof panel.
Panel S	6	Install (3) addtl. screw(s) at bottom of panel to join with the unit base. Install (3) addtl. screw(s) at top of panel to join with the roof panel.
Panel U	3	Install (2) addtl. screw(s) at bottom of panel to join with the unit base. Install (1) addtl. screw(s) at top of panel to join with the roof panel.
Panel W	4	Install (2) addtl. screw(s) at bottom of panel to join with the unit base. Install (2) addtl. screw(s) at top of panel to join with the roof panel.
Panel Y	1	Install (1) addtl. screw(s) at bottom of panel to join with the unit base.
(20) Additional Screw Required in Total per Unit. Addtl. screws shall be #14 min. Ø, SAE Gr. 2 min. or SS SMS. See notes below for further specifications.		

SEE NEXT PAGE FOR SAMPLE APPROXIMATE SCREW LOCATIONS

PANEL INTEGRITY SUMMARY, NFP CABINET GROUP (Continued from Previous Page)

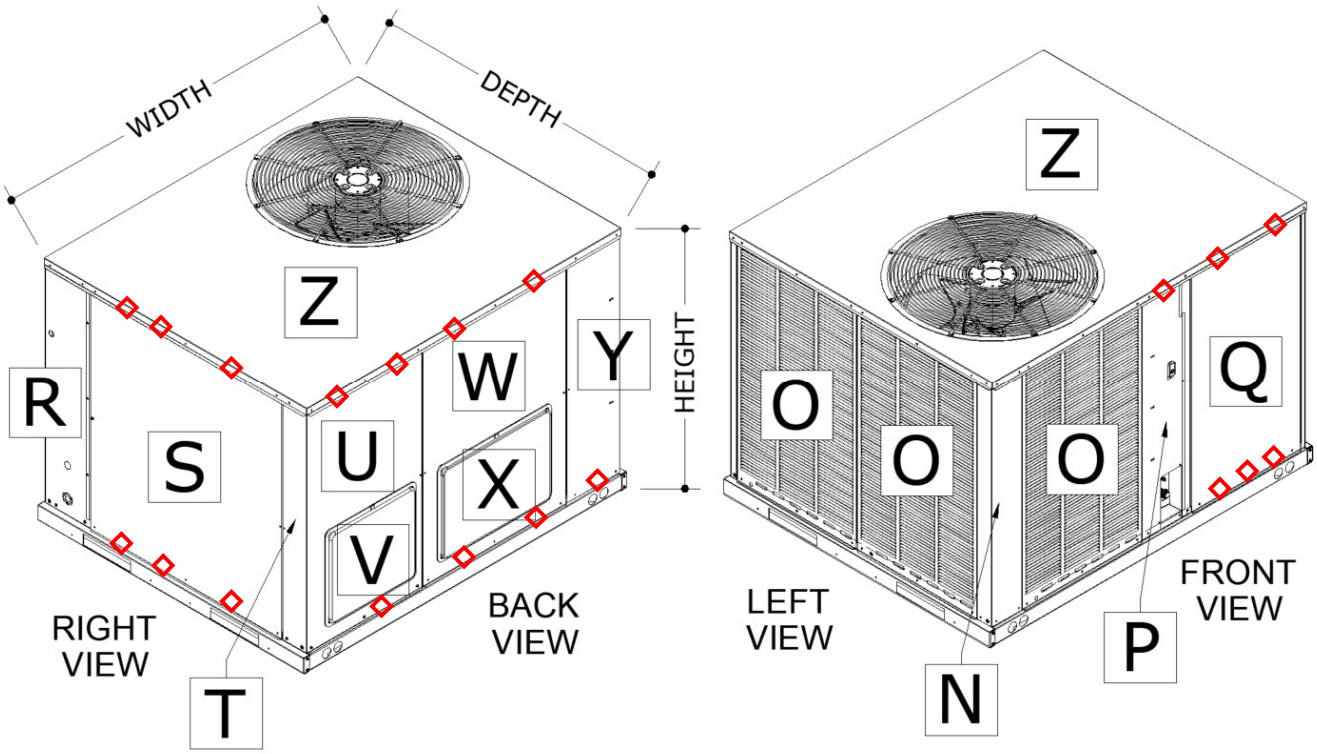

14 SAMPLE NFP ADDITIONAL SCREW LOCATIONS, TYP.

SCALE: NTS MULTIPLE VIEWS

REMAINDER OF PAGE INTENTIONALLY LEFT BLANK

TERMINOLOGY

The following abbreviations may appear in this report: “Addtl.” for “additional”, “AHJ” for “Authority Having Jurisdiction”, “alum” for “aluminum”, “ASCE” for “American Society of Civil Engineers”, “ASD” for “Allowable Stress Design”, “ASTM” for “American Society for Testing and Materials”, “EA.” for “each”, “E.D.” for edge distance”, “EDDS” for “extra deep drawing steel”, “e.g.” for “*exempli gratia*” or “for example”, “equiv.” for “equivalent”, “FBC” for “Florida Building Code”, “FEA” for “Finite Element Analysis”, “FLCA” for “Florida Certificate of Authorization”, “FS” for “Florida Statutes”, “Fu” for “ultimate tensile strength” or “ultimate tensile stress”, “Fy” for “yield strength” or “yield stress” “GA” for “gauge”, “GR." or “Gr.” for “grade”, “HVAC” for “heating, ventilation, and air conditioning”, “HVHZ” for “High-Velocity Hurricane Zone”, “in” for “inch”, “lb” for “pound (force)”, “max.” for “maximum”, “min.” for “minimum”, “mm” for “millimeter”, “NTS” for “not to scale”, “O.C. ” for “on center”, “OD” for “outer diameter”, “pcf” for “pounds (force) per cubic foot”, “PE” for “Professional Engineer”, “qty” for “quantity”, “SAE” for “Society of Automotive Engineering”, “SMS” for “sheet metal screws”, “SS” for “stainless steel”, “TER” for “Technical Evaluation Report”, “typ.” for “typical”, “ult” for “ultimate loads”, “U.N.O.” for “unless noted otherwise”, “UTS” for “ultimate tensile strength” or “ultimate tensile stress”, “WLL” for “working load limit”, “w/o” for “without”, “YS” for “yield strength” or “yield stress”, “#” for “number”, “&” for “and”, and “Ø” for “diameter”. Please visit ecalc.io/glossary for additional abbreviation clarifications.

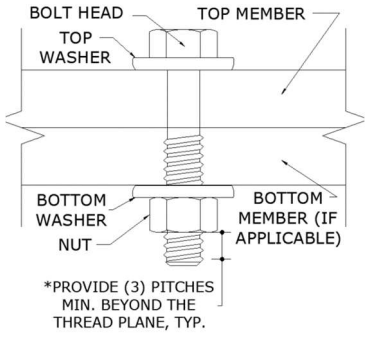

SAMPLE THRU-BOLT

SCALE: NTS SECTION VIEW

The term “Thru-Bolt” or through bolt, if used herein, refers to a bolt passing through the member(s) in contact and is fastened by a nut at the end opposite the screw head. Nut shall be equivalent to or exceed the strength of the bolt U.N.O. Nut shall be sized to accommodate the same nominal diameter as the bolt U.N.O. See diagram above-right for a sample thru-bolt configuration. For instances herein which list material specifications as *“[material type] or stronger”:* U.N.O. herein, the term “stronger” refers to a material with a UTS value equal to or greater than the UTS value of the stated material type. Consult appropriate literature for established material UTS values. Equivalent steel gauge thicknesses as used in this evaluation, U.N.O., are as follows: 22 GA (.030”), 20 GA (.036”), 18 GA (.048”), 16 GA (.060”), 14 GA (.075”), 12 GA (.098”).

LIMITATIONS & CONDITIONS OF USE, CONTINUED

Use of this product shall be in strict accordance with this product evaluation as noted herein. The supporting host structure shall be designed to resist all superimposed loads as determined by others on a site-specific basis as may be required by the authority having jurisdiction. Host structure conditions which are not accounted for in this product’s respective anchor schedule shall be designed for on a site-specific basis by a registered Professional Engineer. No evaluation is offered for the host supporting structure by use of this document. Adjustment factors noted herein and the applicable building codes must be considered, where applicable. Product components shall be of the material(s) specified in the manufacturer-provided product specifications. **For permanent outdoor installations, all exposed anchors, fasteners, connectors, and metal plates shall be corrosion resistant. Corrosion resistance may be provided by inherent material composition or, where permitted by code, by an approved protective coating or galvanization. Where applicable near a saltwater coastline, such components shall comply with FBC Section 1711, including applicable requirements for exposed, protected, or enclosed conditions. Materials, coatings, and finishes shall be compatible with connected materials, and protective coatings shall be continuous over exposed surfaces. Fasteners used with aluminum members shall also comply with Section J.3.7.2 of the Aluminum Design Manual, “Specification for Aluminum Structures.” Substitution of components from alternate manufacturers, or with different materials, coatings, or finishes, shall not be assumed equivalent and may require additional engineering review or site-specific analysis.** All fasteners and anchors shall be installed in accordance with the applicable provisions specified herein in addition to the anchor/fastener manufacturers’ published installation instructions. *Fasteners must penetrate (3) pitches minimum beyond the thread plane of the connecting members in contact. For thru-bolt connections, provide (3) pitches minimum beyond end of nut. For screw connections, provide (3) pitches minimum beyond the bottom member. See Sample Thru-Bolt Detail herein.

All of the wind-resisting exterior panels (with accompanying retrofits) individually meet or exceed their capacity to resist the design wind loads as stated in the calculations as required by the codes and standards stated herein. Due to the indeterminate nature of these units, distortion, deflection, and material deformation cannot be accurately evaluated, but with the diaphragm action of external components and internal stiffeners, the base unit (with accompanying retrofits stated herein as applicable) has the capacity to withstand the design wind loads without detaching from the unit and becoming flying debris.

Survivability: This performance evaluation is valid for a newly installed unit and do not include certification of the product beyond a design event or if impacted by any debris. Inspections shall be implemented annually by the end user and after every named storm. All fasteners and cabinet components are to be verified, and all damaged, loose, corroded and/or broken fasteners and cabinet components shall be replaced to ensure structural integrity against hurricane wind forces. Contact this office for any reevaluation needs or as designated by the Authority Having Jurisdiction.

Durability: Components or component assemblies shall not deteriorate, crack, fail, or lose functionality due to galvanic corrosion or weathering. All supporting components which are permanently installed shall be protected against corrosion, contamination, and other such damage at all times. Each component or component assembly shall be supported and oriented in its intended installation position. All exposed plastic components shall be certified to resist sunlight exposure as specified by ASTM B117, or ASTM G155 in Broward or Miami Dade counties.

Extent of Certification: Certification pertains to the overall structural integrity of the unit components listed within the evaluation as required by code, subject to the limitations and criteria stated herein. Operability during or after a design event is not included in this certification. Water infiltration is outside the bounds of this certification. No other certifications are intended other than as described herein. This evaluation alone does not offer any evaluation for large missile impact debris or cyclic wind requirements unless specifically stated herein.

Proj. #	Remarks	By	Checked	Date	Proj. #	Remarks	By	Checked	Date
24-76223	Initial Issue	MARH	EPR	07/11/24	26-101535	2026 FBC Update	MRT	EPR	08/04/26
24-76223	Modify model numbers	MARH	EPR	25/11/24					

APPENDIX A: DESIGN WIND PRESSURE GUIDE

Max. Ult. Wind Speed (V_{ult})	Max. MRH (Roof Height)	Exposure Category	Required Design Wind Pressures (ASD)	
			Lateral Pressure	Uplift Pressure
140 mph	At-Grade (0 ft)	C	± 26 psf	0* psf
		D	± 31 psf	0* psf
	100 ft	C	± 63 psf	50 psf
		D	± 71 psf	56 psf
	200 ft	C	± 72 psf	57 psf
		D	± 80 psf	63 psf
175 mph	At-Grade (0 ft)	C	± 40 psf	0* psf
		D	± 49 psf	0* psf
	100 ft	C	± 98 psf	77 psf
		D	± 111 psf	87 psf
	200 ft	C	± 113 psf	89 psf
		D	± 124 psf	98 psf
186 mph	At-Grade (0 ft)	C	± 46 psf	0* psf
		D	± 54 psf	0* psf
	100 ft	C	± 111 psf	87 psf
		D	± 125 psf	99 psf
	200 ft	C	± 127 psf	100 psf
		D	± 140 psf	111 psf

~~100 psf~~ Note: Any table values with the format shown left, if present, indicate design wind pressures and site conditions that are **not approved for use** by this evaluation. Seek additional engineering or contact this firm for design solutions.

DIRECTIVE: This design pressure guide is for reference only and shall be approved for use by the Authority Having Jurisdiction (AHJ). If the design pressures listed in this guide are not used, required design pressures shall be calculated separately. For site-specific scenarios classified as Exposure Category B, the required design pressures stated for Exposure Category C in the above guide shall be used or design pressures shall be calculated separately. For heights and parameters beyond the parameters listed in this guide, visit our Online Calculator via the website link (https://ecalc.io/forces) or QR Code below, or obtain calculations separately by others.

The required ASD design pressures listed in this guide were calculated per the table's listed corresponding site conditions. The project design professional or permitting contractor shall verify that the site-specific conditions are equal to or less than the approved design parameters listed in the guide. Per the note below table: any values shown as "~~XX psf~~", indicate wind pressures and corresponding site conditions that are **not valid for use** with this evaluation (exceeds the max. rated pressures).

*Note: Per the codes and standards referenced herein, uplift is not required for mechanical equipment at-grade. If uplift at-grade is required by the AHJ, contact this firm for a site-specific evaluation.

At-Grade (0 ft MRH) Required Design Pressures:

- ASCE 7 "Design Wind Loads: Other Structures"
- Structure Shape = Square, flat terrain
- Height of structure (unit + stand or curb, if used) = 6 ft max.
- Width of unit = 1 ft min., Depth of unit = 11 in min.

Rooftop (>15 ft MRH) Required Design Pressures:

- ASCE 7 "Design Wind Loads: Other Structures: Rooftop Structures and Equipment for Buildings"
- Structure Shape = Square, flat terrain
- z = up to 7 ft, where z = height of stand or curb + ½ unit height
- Lateral GC_f = 1.90; Uplift GC_f = 1.50

VISIT ECALC.IO/FORCES

FOR DESIGN AID CALCULATORS AND RESOURCES RELATED TO THIS EVALUATION & GUIDES HEREIN, OR SCAN THE QR CODE RIGHT >

UNIT REACTIONS FROM WIND GUIDE

DIRECTIVE: This guide is intended for use by a design professional. Design parameters shall abide all specifications and limitations stated in this evaluation. Design professional shall consider all forces, including seismic and snow loads, per the governing building code. Unit reactions obtained from this guide shall be verified by a registered Professional Engineer. Reactions are applicable for unit-to-host connections only. Sample calculations are provided below.

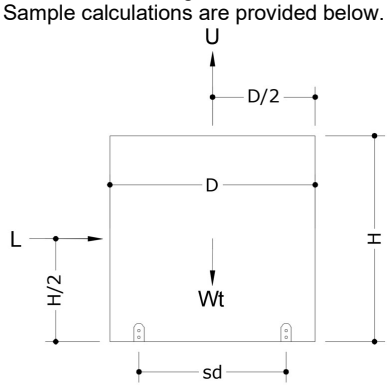

Design Parameters:

- Lateral Wind Pressure, P_lat
- Unit Height, H
- Unit Width, W
- Support Spacing across Depth, sd
- Uplift Wind Pressure, P_up
- Unit Depth, D
- Unit Weight, Wt
- Support Spacing across Width, sw

Unit Reaction Equations:

Long Side (Width x Height):

- Sliding Force, L = P_lat x W x H
- Uplift Force, U = P_up x W x D
- Total Tension per Long Side =
(L x H/2 + U x sd/2 – Wt x 0.6 x sd/2) / sd

Short Side (Depth x Height):

- Sliding Force, L = P_lat x D x H
- Uplift Force, U = P_up x W x D
- Total Tension per Short Side =
(L x H/2 + U x sw/2 – Wt x 0.6 x sw/2) / sw

Example: A (48" W x 36" D x 42" H), 250 lb net weight unit at wind pressures of 120 psf lateral and 95 psf uplift, on a 24" wide roof stand, shall have the following unit reactions:

Long Side (Width x Height):

1. Sliding Force, L = P_lat x W x H
   = (120 psf) x (48 in) x (42 in) x (1 in^2 / 144 ft^2) = **1680 lb**
2. Uplift Force, U = P_up x W x D
   = (95 psf) x (48 in) x (36 in) x (1 in^2 / 144 ft^2) **= 1140 lb**
3. Total Tension per Long Side =
   = (L x H/2 + U x sd/2 – Wt x 0.6 x sd/2) / sd
   = ((1680 lb x 42/2 in) + (1140 lb x 24/2 in) – (250 lb x 0.6 x 24/2 in)) / 24 in **= 1965 lb**

Short Side (Depth x Height):

1. Sliding Force, L = P_lat x D x H
   = (120 psf) x (36 in) x (42 in) x (1 in^2 / 144 ft^2) **= 1260 lb**
2. Uplift Force, U = P_up x W x D
   = (95 psf) x (48 in) x (36 in) x (1 in^2 / 144 ft^2) **= 1140 lb**
3. Total Tension per Short Side =
   = (L x H/2 + U x sw/2 – Wt x 0.6 x sw/2) / sw
   = ((1260 lb x 42/2 in) + (1140 lb x 48/2 in) – (250 lb x 0.6 x 48/2 in)) / 48 in **= 1046 lb**

IN ALL CONDITIONS IT IS THE RESPONSIBILITY OF THE PERMIT HOLDER TO ENSURE THE HOST STRUCTURE IS CAPABLE OF WITHSTANDING THE RATED GRAVITY, LATERAL, AND UPLIFT FORCES BY SITE-SPECIFIC DESIGN. NO WARRANTY OF ANY KIND, EXPRESSED OR IMPLIED, IS OFFERED BY ENGINEERING EXPRESS AS TO THE INTEGRITY OF THE HOST STRUCTURE TO CARRY DESIGN FORCE LOADS INCURRED BY THIS UNIT.