ENGINEERING EXPRESS®

ENGINEERINGEXPRESS.COM | (954) 354-0660
POSTAL ADDRESS:
2234 NORTH FEDERAL HWY #7664
BOCA RATON, FL 33431

Performance Evaluation

Florida Statewide Product Approval (FSA) # FL 46879.7
Engineering Express Project # 25-89047
THIS DOCUMENT CONTAINS (13) PAGES.

(WITH HURRICANE BRACING KIT)

EVALUATION SUBJECT: **KD230-300 ALUMINUM ENCLOSURES** FL # 46879.7

REPORT HOLDER:
DISCOVERY ENERGY, LLC.
200 TWIN OAKS ROAD
KOHLER, WI 53044, USA

ALL CERTIFICATIONS: STATIC WIND, MISSILE IMPACT (LEVEL E), CYCLIC WIND, & ANCHORAGE

(SEE ENCLOSURE DEPICTIONS HEREIN)

SCOPE OF EVALUATION (compliance with the following codes):

THIS IS A STRUCTURAL PERFORMANCE EVALUATION ONLY.
NO ELECTRICAL OR TEMPERATURE PERFORMANCE RATINGS OR CERTIFICATIONS ARE OFFERED OR IMPLIED HEREIN.
UNDER NO CIRCUMSTANCE DOES THIS PERFORMANCE EVALUATION GUARANTEE, IMPLY, OR STATE PERFORMANCE OF THE UNIT IS MAINTAINED DURING OR AFTER A DESIGN EVENT.

This Performance Evaluation is being issued in accordance with the requirements of the **Florida Building Code Eighth Edition (2023)** per ASCE 7, FBC Building Ch. 16, FBC Building Sections 104.11, 453.25.5 & 1522.2, FBC Existing Building Sections 707.1 & 707.2, FBC Mechanical 301.15, FBC Residential M1202.1 & M1301.1, and FS 471.025. The product noted in this performance evaluation has been tested and/or evaluated as summarized herein.

SUBSTANTIATING DATA:

• Product Evaluation Documents
Substantiating documentation has been submitted to provide this performance evaluation and is summarized in the sections below.
Test Reports: i4190.01-109-18-r0, i4981.02-109-18-r0, i4981.03-109-18-r1, i4981.04-109-18-r0, i7639.01-109-18-r1, & i8180.01-109-18-r0, all tests by Intertek.

• Structural Engineering Calculations
Structural engineering calculations have been prepared which evaluate the product based on:

Rational analysis to qualify the following design criteria:
- Max. rated allowable (ASD) lateral & uplift wind pressures
- Max. allowable sliding forces, uplift forces, & overturning moments (see Unit Rxns. Guide on last page)
- Tie-down configuration and anchor capacity for included unit, tank, and I-beam anchoring as specified herein (tank integrity and host integrity by others)
- Unit integrity via FEA on unit framing/housing & connections.

2. Comparative analysis (per FBC Building § 1709.5.1) to qualify:
- Max. Missile Impact Rating per TAS 201 – Level "E"
- Max. Cyclic Wind Pressures per TAS 203 & FBC Table 1625.4, as shown in the "Structural Performance" section on this page.

Calculation summary is included and appears herein.

LIMITATIONS & CONDITIONS OF USE:
Use of the product(s) listed herein shall be in strict accordance with this product evaluation as noted herein and manufacturer-provided model specifications. Installation shall conform to the minimum standards stated in the referenced building code(s) in addition to the specifications and limitations stated herein. See herein for complete limitations & conditions of use.

OPTIONS:
This evaluation is valid for the models described herein. This evaluation includes standard product only. Contact Rehlko for Engineering Special (ES) orders. The critical unit designs have been determined and used in this evaluation. Enclosure and tank designs shall follow this evaluation's limitations and the documentation supplied to Engineering Express. Any structural changes outside of the design as described herein would void this certification.

STRUCTURAL PERFORMANCE:
Models referenced herein are subject to the following design limitations:

Maximum-Rated ASD Static Wind Pressures*:
± 61 psf Lateral, 61 psf Uplift

Maximum pressure rating determined based on the design parameters of: Vult = 200 mph, Exposure D, flat terrain, at-grade.

- Required design wind pressures shall be determined according to the guide provided in the Appendix (see last page of this document) or on a site-specific basis in accordance with ASCE 7 and applicable sections of the building code(s) being referenced in accordance with ASD methodology.
- Required design wind pressures shall be less than or equal to the maximum pressures listed herein.
- *Maximum-Rated ASD Static Wind Pressures indicate the maximum pressures that all units listed herein are approved for. Valid for at-grade applications only. See limitations herein.
- Valid for use inside and outside the High-Velocity Hurricane Zone (HVHZ).
- Site-specific wind analysis may produce alternate limitations provided that the maximum-rated wind pressures stated herein are not exceeded.

Maximum Allowable (ASD) Cyclic Wind Pressures	Maximum Missile Impact Rating:
Wall Panels/Doors/Louvers: ± 39 psf Roof Panels: ± 60 psf	Missile Level "E"

VISIT ECALC.IO/REHLKO
FOR MORE INFORMATION AND DEVIATIONS TO THIS EVALUATION OR SCAN THE QR CODE TO THE RIGHT >

Engineer Signature & Seal:

RICHARD NEET LICENSE No. P.E. 86488 STATE OF FLORIDA PROFESSIONAL ENGINEER

Digitally signed by Richard Neet
Date: 2025.10.10 17:06:42 -04'00'

October 10, 2025

Richard Neet, P.E.
ENGINEERING EXPRESS®
FL PE #86488 FLCA #9885

*PRINTED COPIES OF THIS DOCUMENT ARE NOT CONSIDERED SIGNED & SEALED. SIGNATURE MUST BE VERIFIED ON ANY ELECTRONIC COPIES.
***FOR FLORIDA STATEWIDE PRODUCT APPROVALS (FSAs) REGISTERED & APPROVED WITH THE STATE OF FLORIDA:** ORIGINAL, SEALED COPIES OF APPROVED FLORIDA PRODUCT APPROVALS ARE NOT REQUIRED FOR PERMIT. SEE ECALC.IO/SEAL TO LEARN MORE.

EVALUATION SUMMARY

Engineering Express has reviewed the design requirements per the referenced building code and ASCE 7 for the structural integrity of the Rehlko aluminum enclosure with steel skid to withstand the maximum uniform static wind pressures, Missile Level "E" large missile impacts, and maximum cyclic wind pressures stated herein. The analysis forming the basis of this certification includes the unit framing and housing only and requires a permanent near-grade (non-rooftop) attachment to a concrete, metal, or wood host structure as certified/verified by others. Steel skid tie-down anchor locations shall conform to the Rehlko documentation referenced herein. Additionally, the unit shall not be installed in a location susceptible to channeling effects from upwind obstacles. It shall be the installer's responsibility to ensure that the criteria for the unit housing integrity, as listed above, is applicable for use at the location of installation and that the mounting method meets or exceeds the requirements of the local code and it is approved by the appropriate local authority prior to installation.

This certification is intended to certify the structural capacity and integrity of the structural framing members, wall and roof sheet metal panels, generator skid, and internal structural connections only for the aluminum enclosures listed herein to resist the stated maximum ASD uniform static wind pressures, Missile Level "E" large missile impacts, and maximum ASD cyclic wind pressures stated herein. Design of the generator itself, mechanical designs, energy/electrical criteria, generator slab support, accompanying anchorage components not specified herein, and all non-structural items shall be verified by others and are outside the scope of this certification. Upon analysis of the aluminum housing unit vs. the critical ASD design loads illustrated herein, this engineer has concluded that the aluminum housing enclosure provides adequate resistance to the stated maximum ASD uniform static wind pressures. Upon review of the results shown on the referenced test reports and comparative analysis to the tested enclosures referenced in said test reports, this engineer has concluded that the aluminum housing enclosure provides adequate resistance to the specified missile impact and ASD cyclic loads.

All installation work shall follow the minimum requirements of the referenced building code(s) as are applicable, in addition to any additional site-specific requirements not covered by this evaluation. Except as expressly provided herein, no additional affirmations are intended.

The enclosures' deformation after a design event is a serviceability element. Testing showed that deformations are present; however, such deformations did not cause the components to detach, dislodge, or otherwise separate from the assembly. Moreover, no critical component limit was reached due to the resultant deflection.

STRUCTURAL ENGINEERING CALCULATIONS: UNIFORM STATIC WIND LOADING (PAGE 1 OF 2)

Structural engineering calculations have been prepared which evaluate the aluminum enclosure based on rational analysis using Finite Element Analysis (FEA) to qualify the following design criteria:

1. Maximum allowable (ASD) design pressures, as evaluated below:

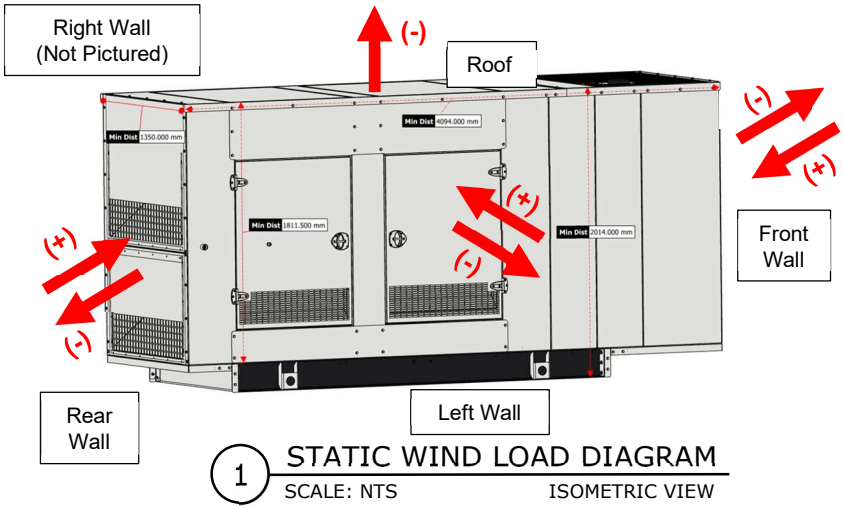

Load Case	ASD Wind Pressure, psf (x 10^{-3} MPa)	Acting On:
1	- 61 (- 2.921)	Right Wall
2	- 61 (- 2.921)	Rear Wall
3	- 61 (- 2.921)	Front Wall
4	- 61 (- 2.921)	Roof

The arrows shown in Detail 1 represent wind pressures acting on the unit. The direction of loading is shown in parentheses adjacent to the arrow. For lateral wind loading, wind pressure acts either positively, "pushing" inwards into the wall of interest, or negatively, "pulling" outwards in suction on the wall of interest. For uplift wind loading, wind pressure acts upwards, "pulling" the roof panels in suction, and are designated as negative wind loads.

STRUCTURAL ENGINEERING CALCULATIONS: UNIFORM STATIC WIND LOADING (PAGE 2 OF 2)

FEA was performed on the structural enclosure design in accordance with ASCE 7. Multiple load cases were evaluated to consider the worst-case wind loads acting on each side of the unit to provide a collective unit integrity certification. Lateral loading on the Left Wall of the enclosure was purposefully omitted, as the Left Wall of the enclosure almost identical in design to the Right Wall, and thus, can be qualified by evaluation of the Right Wall. (The Right Wall has one solid door without grating). Acting wind pressures in each load case are tabulated in the table on the previous page. Negative wind loads were considered to govern over positive wind loads (positive loading will have the beneficial resistance of the structural framing and other non-structural interior components).

2. Maximum nominal unit dimensions:

Enclosure Models	Enclosure Dimensions, in (mm)		
	Width	Depth	Height
KD230-300	162 (4094)	54 (1350)	80 (2014)

Unit dimensions listed herein are unit net/operating dimensions (as opposed to gross/packing/shipping dimensions). Unit dimensions may be abbreviated herein as "H" for "unit height", "W" for "unit width", and "D" for "unit depth". Unit dimensions are rounded up to the next inch based on the specified millimeter dimensions. For exact enclosure assembly dimensions, consult the respective drawing/files listed in the "Units Included" section herein.

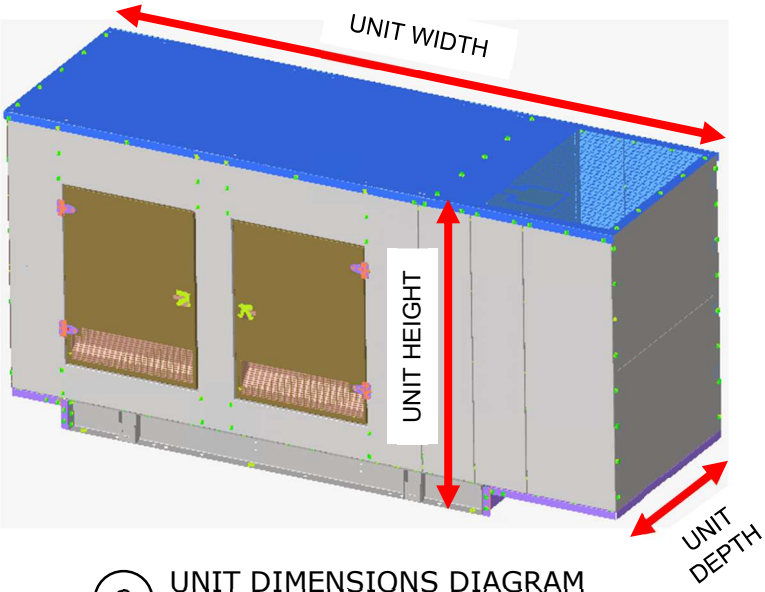

2 UNIT DIMENSIONS DIAGRAM
SCALE: NTS ISOMETRIC VIEW

3. Permissible net weight range:
   The total combined unit net weight (enclosure, skid, and genset) shall be 1,000 lb min. (454 kg min.). Tank dry weight shall be per the Fuel Tanks Included schedule table herein. Weights less than these minimum values shall be approved by this office.

4. Connection capacities:
   Connection capacities, including bolted and welded components, have been checked for applicable tension and shear by applying a unity interaction equation where applicable and have been approved by this office.

5. Material capacities:
   The capacities of the considered enclosure and skid components have been analyzed for yield and ultimate tensile stresses using Von Mises stress criteria in accordance with the current editions of the Aluminum Design Manual & AISC Steel Construction Manual. For all load cases, Von Mises stresses were below the ultimate tensile stresses of the respective materials; therefore, the enclosure and skid will provide enough structural capacity to resist the wind pressures shown. Upon thorough review of the results, it is the opinion of this engineer that the results satisfactorily indicate that the enclosure and skid provide adequate resistance to the maximum rated wind pressures stated herein.

UNIT CASING MATERIALS:

1/8" thick alum. 5052-H32 wall panels and doors, 1/8" thick alum. overhanging intake/discharge end supports, connected to 7 GA. thick interior steel frame. 7 GA thick HRPO steel for the bottom skid. Panel-panel and enclosure-skid connections secured with M8 Class 8.8 bolts (see Enclosure Files per Rehlko for specific locations). Each enclosure door is supported by (2) A2-70 SS (equiv. to 304 SS) hinges and (1) A2-70 SS latch. Contact the Report Holder for further unit construction information.

RETROFITS TO ALUMINUM ENCLOSURE FOR IMPACT & CYCLIC CERTIFICATION

The enclosures listed herein shall be retrofitted according to the Bracing Kit Drawing # 11404056747-KA1 per Rehlko - contact Rehlko for more information and the retrofit Bill of Materials. The detail shown below is for reference only and may not depict all required retrofits/specifications.

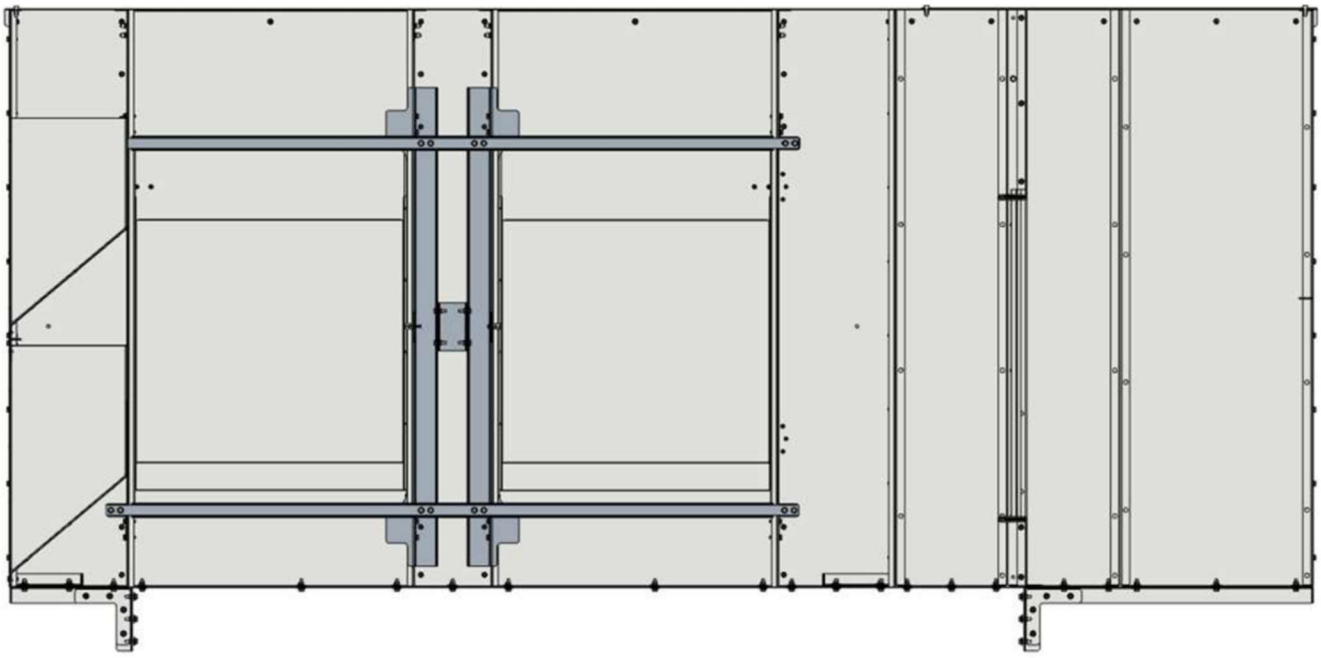

HURRICANE BRACING KIT:
DOUBLE DOOR BRACING

SCALE: NTS INTERIOR SECTIION VIEW

THE REMAINDER OF THE PAGE IS INTENTIONALLY LEFT BLANK.

FUEL TANKS INCLUDED (ANCHORAGE CERTIFICATION ONLY)

Fuel Tank		Fuel Tank Dimensions [in] (mm)			Min. Dry Weight [lb] (kg)
Description	Capacity [Gallons] Liters	Width	Depth	Height	
24Hr. Standard	470 (1779)	161.4 (4100)	53.1 (1350)	24.0 (610)	2936 (1332)
24Hr. State	470 (1779)	202.0 (5131)	53.1 (1350)	18.0 (457)	2965 (1345)
48Hr. Standard	940 (3558)	201.4 (5116)	53.1 (1350)	34.0 (864)	4070 (1846)
48Hr. State	940 (3558)	202.0 (5131)	53.1 (1350)	33.0 (838)	3910 (1774)
96Hr State* *includes top-mounted I-beams	1950 (7382)	250.0 (6350)	74.8 (1900)	36.0 (914)	7086 (3214)

The fuel tanks listed above have not been evaluated for static wind loading. The integrity of the tank itself is by others. Only the integrity of the designed anchorage connections is certified by this evaluation. See the following sections for anchorage specifications.

*Note: 96Hr. State Fuel tank finished good assemblies include (3) top-mounted I-beams, between the enclosure bottom skid and top of the tank. (See diagram below; I-beam height is not included in the fuel tank height listed above; I-beam height shall be 12" maximum).
The I-beams have not been evaluated for static wind loading. The integrity of the I-beams themselves is by others. Only the integrity of the designed anchorage connections is certified by this evaluation. See the following sections for anchorage specifications.

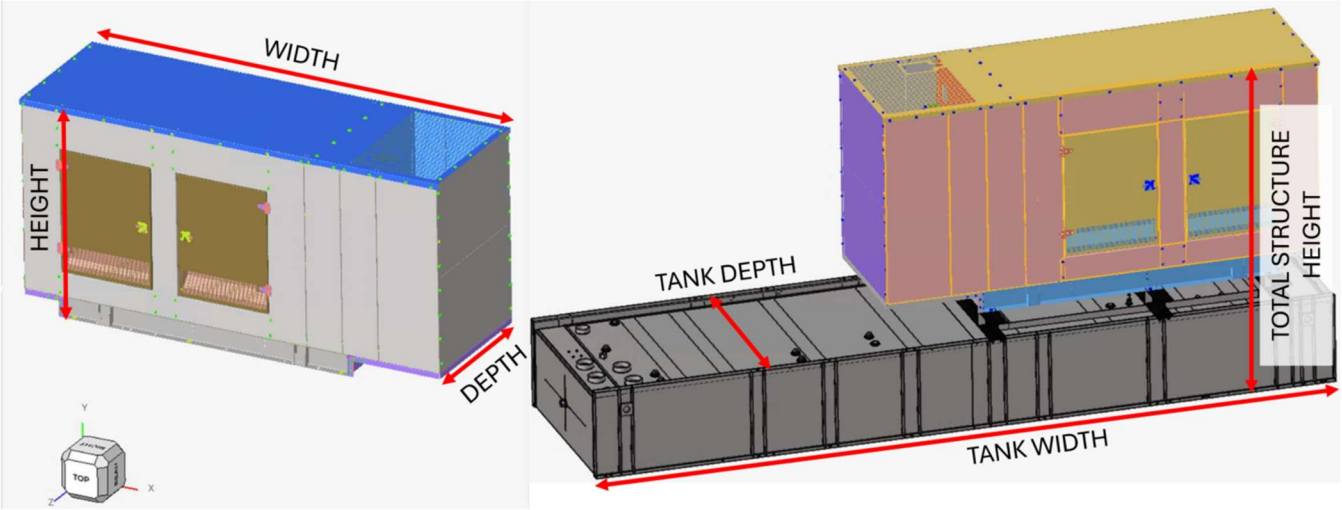

3 UNIT & FUEL TANK DIAGRAMS
SCALE: NTS ISOMETRIC VIEWS

Note: Unit and Fuel Tank Dimensions vary; see Tables herein. See previous page for unit (enclosure) dimensions. Total structure height is considered in this evaluation as the enclosure height + tank height + I-beam height (12" max).

SEE NEXT PAGE FOR ANCHORING SPECIFICATIONS

ANCHORAGE DIRECTIVE (PAGE 1 OF 3): ENCLOSURE TO CONCRETE HOST (NO FUEL TANK)

Anchor Specifications					
Directive "A": # of Anchors to Concrete	**Anchor Brand, Name, & Type**	**Ø [in] (mm)**	**Embed. [in] (mm)**	**Min. Edge Dist. [in] (mm)**	**Min. Conc. Thick. [in] (mm)**
(6)	HILTI Kwik Bolt TZ2 SS304 or SS316	3/4 (19)	4-1/2 (115)	6 (152)	6-3/4 (172)

Mounting directive specifications are listed below:

A. For scenarios in which no fuel tank is used: The unit skid shall mount directly to the concrete using the anchor quantity specified in the Anchor Directive table. For each long side: position the anchors at the prefabricated mounting holes, 8" min. spacing, typ. Refer to the respective enclosure ADV drawing per Rehlko for mounting hole locations (see Rehlko for more information). Skid anchoring flange shall be Fy = 36 ksi min. & Fu = 60 ksi min. steel.

Read anchor specifications from the Anchorage Directive tables from left to right, which state: brand, name/type of anchor, nominal diameter, embedment, minimum edge distance to any edge of the concrete, minimum concrete thickness, and the total number of anchors, respectively. See sample Anchor Illustration below. Refer to Rehlko's associated documentation and the "Wind Installation Requirements" section herein for additional installation instructions and directives.

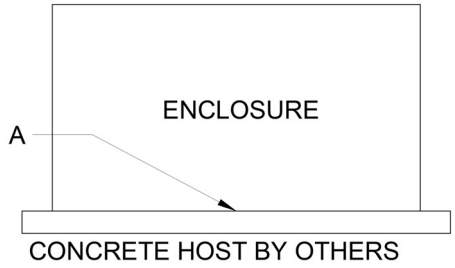

ANCHORAGE DIRECTIVE "A": ENCLOSURE ONLY (NO TANK)

SCALE: NTS ELEVATION VIEW

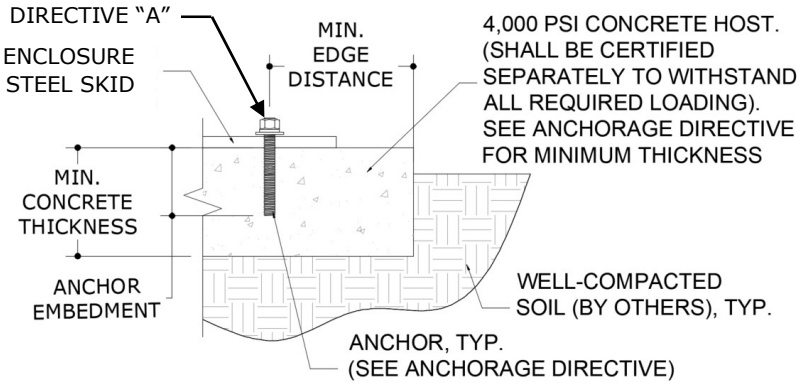

ANCHOR ILLUSTRATION

SCALE: NTS SECTION VIEW

ANCHORAGE DIRECTIVE (PAGE 2 OF 3): ENCLOSURE WITH FUEL TANK (NO TOP-MOUNTED I-BEAMS)

Fuel Tank		Directive "B": # of Thru-Bolts for Skid-to-Tank Connection	Anchor Specifications					
Description	Capacity [Gallons] Liters		Directive "C": # of Anchors to Concrete	Anchor Brand, Name, & Type	Ø [in] (mm)	Embed. [in] (mm)	Min. Edge Dist. [in] (mm)	Min. Conc. Thick. [in] (mm)
24Hr. Standard	470 (1779)	(6)	(12)	HILTI Kwik Bolt TZ2 SS304 or SS316	3/4 (19)	4-1/2 (115)	6 (152)	6-3/4 (172)
24Hr. State	470 (1779)	(6)	(12)					
48Hr. Standard	940 (3558)	(6)	(14)					
48Hr. State	940 (3558)	(6)	(14)					

Mounting directive specifications are listed below:

B. For scenarios in which the fuel tank is used without top-mounted I-Beams: The unit skid shall mount directly to the fuel tank with the specified number of thru-bolts. Thru-bolts shall be M20 UNC GR. 8.8 thru-bolts with 1.5" min. nominal OD washers (37 mm OD washers acceptable) top and bottom, typ. Provide 1.5" min. edge distance from any edge of both members in contact (skid flange and tank flange). Tank top anchoring flange shall be 3/16" min. thick, and both members in contact (i.e. bottom skid and top tank anchoring flange) shall be Fy = 36 ksi min. & Fu = 60 ksi min. steel. Refer to the associated Rehlko documentation for thru-bolt locations.

C. The fuel tank shall be anchored to the concrete using the anchor quantity specified in the Anchor Directive table. For each long side: position the anchors at the prefabricated mounting holes, 8" min. spacing, typ. Refer to the respective fuel tank drawing per Rehlko for mounting hole locations (see Rehlko for more information). Tank bottom anchoring flange shall be 3/16" min. thick and Fy = 36 ksi min. & Fu = 60 ksi min. steel.

Read anchor specifications from the Anchorage Directive tables from left to right, which state: brand, name/type of anchor, nominal diameter, embedment, minimum edge distance to any edge of the concrete, minimum concrete thickness, and the total number of anchors, respectively. See sample Anchor Illustration below. Refer to Rehlko's associated documentation and the "Wind Installation Requirements" section herein for additional installation instructions and directives.

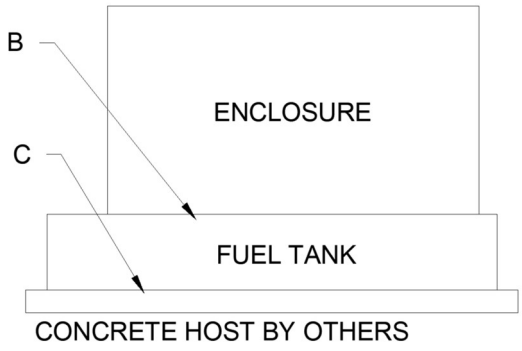

ANCHORAGE DIRECTIVES "B" & "C": ENCLOSURE W/ TANK (NO I-BEAMS)

SCALE: NTS ELEVATION VIEW

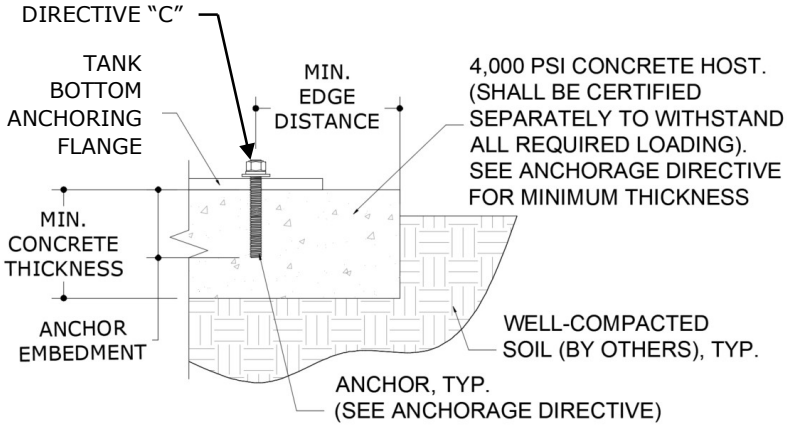

ANCHOR ILLUSTRATION

SCALE: NTS SECTION VIEW

ANCHORAGE DIRECTIVE (PAGE 3 OF 3): ENCLOSURE WITH FUEL TANK & TOP-MOUNTED I-BEAMS

Fuel Tank		Top I-Beam Directive: # of Thru-Bolts for:		Anchor Specifications					
Description	Capacity [Gallons] Liters	D: Skid to I-Beams	E: I-Beams to Tank	Directive "F": # of Anchors to Concrete	Anchor Brand, Name, & Type	Ø [in] (mm)	Embed. [in] (mm)	Min. Edge Dist. [in] (mm)	Min. Conc. Thick. [in] (mm)
96Hr State* *includes top-mounted I-beams	1950 (7382)	(6)	(12)	(20)	HILTI Kwik Bolt TZ2 SS304 or SS316	3/4 (19)	4-1/2 (115)	6 (152)	6-3/4 (172)

For scenarios in which the fuel tank is used with top I-Beams as an intermediary between the unit skid and tank: refer to the associated Rehlko fuel tank documentation for top I-beam positioning within each fuel tank configuration. Skid flange, tank flange, and I-beam flanges shall all be Fy = 36 ksi min. & Fu = 60 ksi min. steel. Tank flange and I-beam flanges shall be 3/16" min. thick.
Mounting directive specifications are listed below:

D. For each top I-beam connection to the above skid, employ (2) M20 UNC GR. 8.8 steel thru-bolts with 1.5" min. nominal OD washers (37 mm OD washers acceptable) top and bottom, (1) thru-bolt per side, typ. Provide 1.5" min. edge distance between the thru-bolt and any edge of the members in contact (skid flange and I-beam flange). Refer to the associated Rehlko top I-beam configuration documentation for thru-bolt locations.

E. For each top I-beam connection to the below tank, employ (4) M20 UNC GR. 8.8 steel thru-bolts with 1.5" min. nominal OD washers (37 mm OD washers acceptable) top and bottom, (2) thru-bolts per side, typ. Provide 1.5" min. edge distance between the thru-bolt and any edge of the members in contact (I-beam flange and tank flange). Refer to the associated Rehlko top I-beam configuration documentation for thru-bolt locations.

F. The fuel tank shall be anchored to the concrete using the anchor quantity specified in the Anchorage Directive table. For each long side: position the anchors at the prefabricated mounting holes, 8" min. spacing, typ. Refer to the respective fuel tank drawing per Rehlko for mounting hole locations (see Rehlko for more information). Tank bottom anchoring flange shall be 3/16" min. thick and Fy = 36 ksi min. & Fu = 60 ksi min. steel.

Read anchor specifications from the Anchorage Directive tables from left to right, which state: brand, name/type of anchor, nominal diameter, embedment, minimum edge distance to any edge of the concrete, minimum concrete thickness, and the total number of anchors, respectively. See sample Anchor Illustration below.

Refer to Rehlko's associated documentation and the "Wind Installation Requirements" section herein for additional installation instructions and directives.

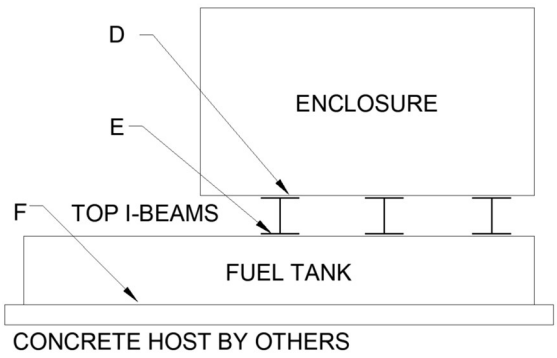

ANCHORAGE DIRECTIVES "D" – "F": ENCLOSURE W/ TANK & TOP I-BEAMS

SCALE: NTS ELEVATION VIEW

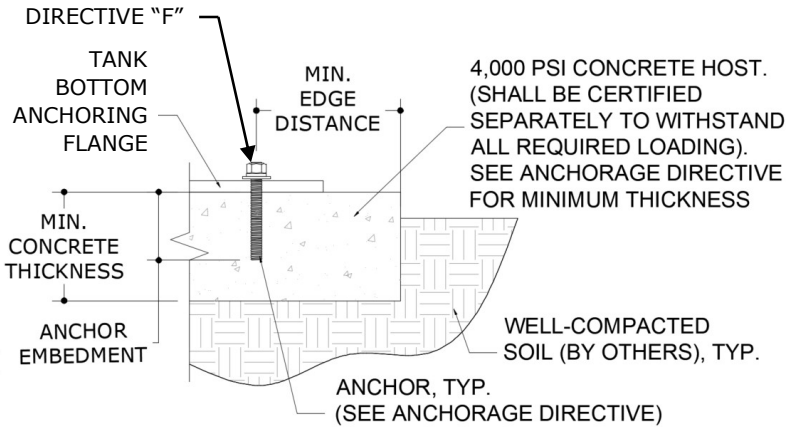

ANCHOR ILLUSTRATION

SCALE: NTS SECTION VIEW

WIND INSTALLATION REQUIREMENTS (PAGE 1 OF 2)

The product(s) listed above shall be installed in strict compliance with this product evaluation & manufacturer-provided specifications. The product components shall be of the material specified in the manufacturer-provided product specifications. All screws, bolts, and rivets must be installed in accordance with the applicable provisions & anchor manufacturer's published installation instructions.

The following are requirements for wind-rated installation:

1. The design of post-installed anchors in concrete used for the component anchorage has been evaluated by this engineer for wind applications in accordance with ASCE 7 as referenced herein.
2. Anchors must be installed in minimum 4000 psi compressive strength normal-weight concrete. Concrete aggregate must comply with ASTM C33. Installation in structural lightweight concrete is not permitted unless otherwise approved by the Structural Engineer of Record
3. Anchors must be installed to the torque specification as recommended by the anchor manufacturer to obtain full capacity.
4. Anchors must be installed in the locations specified in the respective Rehlko documentation in correlation with signed and sealed engineering herein. The more stringent requirement from either document shall apply in cases of uncertainty.
5. Anchor plates from Rehlko must be installed at each anchor location between anchor head and equipment for tension load distribution.
6. Concrete floor slab and concrete housekeeping pads must be designed, and rebar reinforced, for wind applications in accordance with ACI 318 and ASCE 7 as referenced herein
7. Unless noted otherwise herein, all housekeeping pad thicknesses must be designed in accordance with pre-qualification test report or a minimum of 1.5x the anchor embedment depth, whichever is largest.
8. All housekeeping pads must be doweled or cast into the building structural floor slab and designed for wind application per appropriate code requirements for the subject jurisdiction and as approved by the Structural Engineer of Record.
9. Floor-mounted equipment (with or without housekeeping pad) must be installed to a rebar reinforced structural concrete floor that is designed for wind applications and approved by the engineer of record to resist the added wind loads from components being anchored to the floor.
10. When installing to a floor, rebar interference must be considered.
11. Attaching equipment to any floor other than those constructed of structural concrete and designed to accept the wind loads from said equipment is not permitted by this specification and beyond the scope of this certification.
12. Wall-mounted and rooftop installations are not permitted by this evaluation and are beyond the scope of this certification.
13. Installation upon curbs shall be coordinated with the curb manufacturer and the Structural Engineer of Record.
14. Anchor locations, size, type, and load requirements shall be as specified on the certified installation specification. Mounting requirements details such as brand, type, embedment depth, edge spacing, anchor spacing, concrete strength, and special inspection must be outlined and approved by the project Structural Engineer of Record to withstand the wind anchor loads as defined on the certified installation specification. The installing contractor is responsible for the proper installation of all anchors and mounting hardware, observing the mounting requirement details specified herein or outlined by the Engineer of Record. Contact Rehlko if a detailed Wind Installation Calculation Package is required.
15. Electrical wiring, piping, ductwork, and other connections to the equipment are the responsibility of the installing contractor. It is necessary that these remain intact and functional, and do not inhibit the functionality of the generator set after a wind event.
16. Concrete pad requirements specified herein are minimum values to satisfy only the anchor bolt requirements. The pad must be designed by the project structural Engineer of Record.

WIND INSTALLATION REQUIREMENTS (PAGE 2 OF 2)

17. "Thru-Bolt" where used herein: refers to mounting thru-bolts specified in the Anchorage Directives. Thru-bolt shall be Class 8.8 min. with 1.5" min. nominal OD (37 mm OD acceptable) washers and ID sized for the bolt shank diameter at the top and bottom of the connection (under the bolt head and above the locking nut), and Class 8.8 min. locking nut at the underside of the connection, typ. See the thru-bolt diagram on the second-to-last page of this report.

18. For all fasteners specified herein: provide 3x diameter minimum spacing and 1.5x diameter minimum edge distance for all steel-to-steel and steel-to-aluminum connections, typ. Provide 2.5x diameter minimum spacing and 1.5x diameter minimum edge distance for all aluminum-to-aluminum connections.

19. Refer to fastener manufacturer's published data sheets and recommendations for fastener installation instructions. Fasteners shall be cadmium-plated or otherwise corrosion-resistant material and shall comply with "Specifications for Aluminum Structures" Section J.3.7.2 by the Aluminum Association Inc., and any applicable federal, state, and/or local codes.

20. Alternate/equivalent anchors may be used in place of the listed anchors herein so long as all of the below conditions are satisfied and are subject to the approval of the Authority Having Jurisdiction:

    a. The equivalent anchor is demonstrated to have allowable (ASD) tension and shear capacities equal to or greater than the listed anchor's allowable tension and shear capacities as verified by a Design Professional.

    b. All necessary reductions in capacity for edge distance, spacing, and other requirements as noted by the anchor manufacturer are considered in determining the equivalent anchor's tension and shear capacities.

    c. The alternate anchor is of equal or greater diameter than the listed anchor and is provided with the same minimum edge distance, spacing, and any other specifications as are required for the listed anchor; AND

    d. Anchor equivalents shall follow all requirements specified in this report in addition to the governing code(s) and allowable stress design (ASD) methodology.

    Contact Engineering Express to add additional anchoring options to this report, or to certify an anchor option for special site-specific conditions needed for a particular site installation.

21. The contractor is responsible for insulating all members from dissimilar materials to prevent electrolysis.

22. Interior mechanisms and/or electrical circuitry are outside the scope of this performance evaluation. Electrical ground, when required, to be designed & installed by others. All mechanical specifications (clear space, tonnage, etc.) shall be as per manufacturer recommendations and are the express responsibility of the contractor.

23. The products and/or systems detailed herein are generic and do not provide information for a specific site. For site conditions different from the conditions listed herein, a licensed engineer or registered architect shall provide site-specific documents for use in conjunction with this evaluation report. Contact Engineering Express for site scenarios outside the bounds of this evaluation.

24. Engineering Express shall be notified and given an opportunity to reevaluate our work upon discovery of any inaccurate information prior to modification of existing field conditions and fabrication and installation of materials.

25. Alterations, additions, or other markings to this document are not permitted and invalidate this certification. Dimensions are shown to illustrate design forces and other design criteria. They may vary slightly but must remain within the limitations specified herein. Work shall be field-verified by others.

26. Engineer seal affixed hereto validates the structural design as shown only. Use of this specification by contractor, et. al. indemnifies and saves harmless this engineer for all costs and damages including legal fees and appellate fees resulting from material fabrication, system erection, and construction practices beyond that which is called for by local, state, and federal codes and from deviations of this plan.

TERMINOLOGY

The following abbreviations may appear in this report: “Addtl.” for “additional”, “AHJ” for “Authority Having Jurisdiction”, “alum” for “aluminum”, “ASCE” for “American Society of Civil Engineers”, “ASD” for “Allowable Stress Design”, “ASTM” for “American Society for Testing and Materials”, “EA.” for “each”, “E.D.” for edge distance”, “EDDS” for “extra deep drawing steel”, “e.g.” for “*exempli gratia*” or “for example”, “equiv.” for “equivalent”, “FBC” for “Florida Building Code”, “FEA” for “Finite Element Analysis”, “FLCA” for “Florida Certificate of Authorization”, “FS” for “Florida Statutes”, “Fu” for “ultimate tensile strength” or “ultimate tensile stress”, “Fy” for “yield strength” or “yield stress” “GA” for “gauge”, “GR." or “Gr.” for “grade”, “HVAC” for “heating, ventilation, and air conditioning”, “HVHZ” for “High-Velocity Hurricane Zone”, “i.e. ” for “*id est*” or “in other words”, “in” for “inch”, “lb” for “pound (force)”, “max.” for “maximum”, “min.” for “minimum”, “mm” for “millimeter”, “NTS” for “not to scale”, “O.C. ” for “on center”, “OD” for “outer diameter”, “pcf” for “pounds (force) per cubic foot”, “PE” for “Professional Engineer”, “qty” for “quantity”, “SAE” for “Society of Automotive Engineering”, “SMS” for “sheet metal screws”, “SS” for “stainless steel”, “TER” for “Technical Evaluation Report”, “typ.” for “typical”, “ult” for “ultimate loads”, “U.N.O.” for “unless noted otherwise”, “UTS” for “ultimate tensile strength” or “ultimate tensile stress”, “WLL” for “working load limit”, “w/o” for “without”, “YS” for “yield strength” or “yield stress”, “#” for “number”, “&” for “and”, and “Ø” for “diameter”. Please visit ecalc.io/glossary for additional abbreviation clarifications.

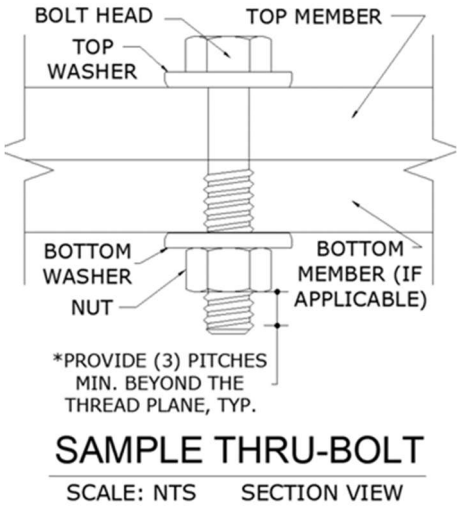

Note: The term “Thru-Bolt” or through bolt, if used herein, refers to a bolt passing through the member(s) in contact and is fastened by a nut at the end opposite the screw head. Nut shall be equivalent to or exceed the strength of the bolt U.N.O. Nut shall be sized to accommodate the same nominal diameter as the bolt U.N.O. See diagram above-right for a sample thru-bolt configuration.

Note: For instances herein which list material specifications as *“[material type] or stronger”:*
U.N.O. herein, the term “stronger” refers to a material with a UTS value equal to or greater than the UTS value of the stated material type. Consult appropriate literature for established material UTS values.

Note: Equivalent steel gauge thicknesses as used in this evaluation, U.N.O., are as follows:
22 GA (.030”), 20 GA (.036”), 18 GA (.048”), 16 GA (.060”), 14 GA (.075”), 12 GA (.098”).

THE REMAINDER OF THE PAGE IS INTENTIONALLY LEFT BLANK.

LIMITATIONS & CONDITIONS OF USE, CONTINUED

Use of this product shall be in strict accordance with this product evaluation as noted herein. Adjustment factors noted herein and the applicable building codes must be considered, where applicable. All supporting components which are permanently installed shall be protected against corrosion, contamination, and other such damage at all times.

Labeling: Enclosure housing must bear the official insignia of Rehlko, with the model name referenced herein, for the applicability and validity of this evaluation.

Host Structure: The supporting host structure shall be designed to resist all superimposed loads as determined by others on a site-specific basis as may be required by the Authority Having Jurisdiction. Host structure conditions that are not accounted for in this product's respective anchor schedule shall be designed for on a site-specific basis by a registered Professional Engineer. No evaluation is offered for the host supporting structure by use of this document.

Anchors & Fasteners: All fasteners and anchors shall be installed in accordance with the applicable provisions specified herein in addition to the anchor/fastener manufacturers' published installation instructions. *Fasteners must penetrate (3) pitches minimum beyond the thread plane of the connecting members in contact. For thru-bolt connections, provide (3) pitches minimum beyond end of nut. For screw connections, provide (3) pitches minimum beyond the bottom member. See Sample Thru-Bolt Detail herein.

Production Drawings: The following drawings shall be accessible if required for a full permit application to be submitted to the Authority Having Jurisdiction in conjunction with this evaluation:

- Electrical schematic(s)
- Final assembly drawings and parts lists sufficient to detail primary components, operator controls, and their locations
- Complete set of mechanical drawings for all machined parts
- Complete part specifications (including manufacturer's model numbers, size, ratings, etc.) for all purchased parts
- Specification sheets for all parts/components
- Drawings showing all construction details
- Product label drawing(s) showing all required marking information. The label drawing shall show the proposed label location on the equipment and artwork showing the manufacturer's name, address, model and serial numbers, equipment ratings, warning markings.

Drawing and Change Control: The manufacturer shall establish a system of product configuration control that shall allow no unauthorized changes to the product. Changes to critical documents, identified in this Product Evaluation, must be reported to, and authorized by, this office prior to implementation for production.

Survivability: Evaluation reports are valid for a newly installed unit and do not include certification of the product beyond a design event or if impacted by any debris. Inspections shall be implemented annually by the end user and after every named storm. All fasteners and cabinet components are to be verified, and all damaged, loose, corroded and/or broken fasteners and cabinet components shall be replaced to ensure structural integrity against hurricane wind forces. Contact this office for any reevaluation needs or as designated by the Authority Having Jurisdiction.

Durability: Components or component assemblies shall not deteriorate, crack, fail, or lose functionality due to galvanic corrosion or weathering. All supporting components which are permanently installed shall be protected against corrosion, contamination, and other such damage at all times. Each component or component assembly shall be supported and oriented in its intended installation position. All exposed plastic components shall be certified to resist sunlight exposure as specified by ASTM B117, or ASTM G155 in Broward or Miami-Dade counties.

Extent of Certification: As described herein, this certification pertains to the structural integrity of the unit components listed herein, subject to the limitations and criteria stated herein. Operability during or after a design event is not included in this certification. Water infiltration is outside the bounds of this certification. No other certifications are intended other than as described herein. We do not guarantee non-structural performance during or after a design event due to other factors that could affect the operation of the unit in question without our site-specific consent.

Proj. #	Remarks	By	Checked	Date	Proj. #	Remarks	By	Checked	Date
25-89047	Initial Issue (Master Proj. 25-88013)	EPR	RWN	10/09/25					

APPENDIX A: DESIGN WIND PRESSURE GUIDE

Max. Ult. Wind Speed (V_{ult})	Max. MRH (Roof Height)	Exposure Category	Required Design Wind Pressures (ASD)	
			Lateral Pressure	Uplift Pressure
140 mph	At-Grade (0 ft)	C	± 25 psf	0* psf
		D	± 30 psf	0* psf
175 mph	At-Grade (0 ft)	C	± 39 psf	0* psf
		D	± 47 psf	0* psf
186 mph	At-Grade (0 ft)	C	± 44 psf	0* psf
		D	± 53 psf	0* psf
200 mph	At-Grade (0 ft)	C	± 51 psf	0* psf
		D	± 61 psf	0* psf

~~100 psf~~

Note: Any table values with the format shown left, if present, indicate design wind pressures and site conditions that are **not approved for use** by this evaluation. Seek additional engineering or contact this firm for design solutions.

DIRECTIVE: This design pressure guide is for reference only and shall be approved for use by the Authority Having Jurisdiction (AHJ). If the design pressures listed in this guide are not used, required design pressures shall be calculated separately. For site-specific scenarios classified as Exposure Category B, the required design pressures stated for Exposure Category C in the above guide shall be used or design pressures shall be calculated separately. For heights and parameters beyond the parameters listed in this guide, visit our Online Calculator via the website link (https://ecalc.io/forces) or QR Code below, or obtain calculations separately by others.

The required ASD design pressures listed in this guide were calculated per the table's listed corresponding site conditions. The project design professional or permitting contractor shall verify that the site-specific conditions are equal to or less than the approved design parameters listed in the guide. Per the note below table: any values shown as "~~XX psf~~", indicate wind pressures and corresponding site conditions that are **not valid for use** with this evaluation (exceeds the max. rated pressures).

At-Grade (0 ft MRH) Required Design Pressures:

- ASCE 7 "Design Wind Loads: Other Structures"
- Structure Shape = Square, flat terrain
- Height of structure (unit + curb/stand/slab/pad) = 9 ft 2 in max.
- Width of unit = 3 ft min., Depth of unit = 3 ft min.

VISIT ECALC.IO/FORCES

FOR DESIGN AID CALCULATORS AND RESOURCES RELATED TO THIS EVALUATION & GUIDES HEREIN, OR SCAN THE QR CODE RIGHT >

UNIT REACTIONS FROM WIND GUIDE

DIRECTIVE: This guide is intended for use by a design professional. Design parameters shall abide all specifications and limitations stated in this evaluation. Design professional shall consider all forces, including seismic and snow loads, per the governing building code. Unit reactions obtained from this guide shall be verified by a registered Professional Engineer. Reactions are applicable for unit-to-host connections only. Sample calculations are provided below.

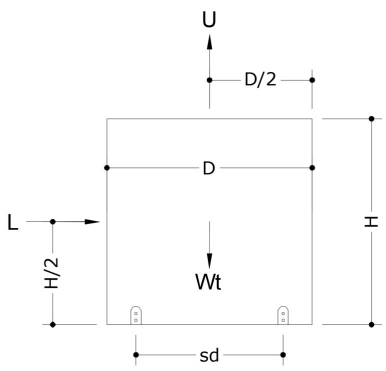

Design Parameters:

- Lateral Wind Pressure, P_lat
- Unit Height, H
- Unit Width, W
- Support Spacing across Depth, sd
- Uplift Wind Pressure, P_up
- Unit Depth, D
- Unit Weight, Wt
- Support Spacing across Width, sw

Unit Reaction Equations:

Long Side (Width x Height):

- Sliding Force, L = P_lat x W x H
- Uplift Force, U = P_up x W x D
- Total Tension per Long Side =
(L x H/2 + U x sd/2 – Wt x 0.6 x sd/2) / sd

Short Side (Depth x Height):

- Sliding Force, L = P_lat x D x H
- Uplift Force, U = P_up x W x D
- Total Tension per Short Side =
(L x H/2 + U x sw/2 – Wt x 0.6 x sw/2) / sw

Example: A (48" W x 36" D x 42" H), 250 lb net weight unit at wind pressures of 120 psf lateral and 95 psf uplift, on a 24" wide roof stand, shall have the following unit reactions:

Long Side (Width x Height):

1. Sliding Force, L = P_lat x W x H
   = (120 psf) x (48 in) x (42 in) x (1 in^2 / 144 ft^2) = **1680 lb**
2. Uplift Force, U = P_up x W x D
   = (95 psf) x (48 in) x (36 in) x (1 in^2 / 144 ft^2) **= 1140 lb**
3. Total Tension per Long Side =
   = (L x H/2 + U x sd/2 – Wt x 0.6 x sd/2) / sd
   = ((1680 lb x 42/2 in) + (1140 lb x 24/2 in) –
   (250 lb x 0.6 x 24/2 in)) / 24 in **= 1965 lb**

Short Side (Depth x Height):

1. Sliding Force, L = P_lat x D x H
   = (120 psf) x (36 in) x (42 in) x (1 in^2 / 144 ft^2) **= 1260 lb**
2. Uplift Force, U = P_up x W x D
   = (95 psf) x (48 in) x (36 in) x (1 in^2 / 144 ft^2) **= 1140 lb**
3. Total Tension per Short Side =
   = (L x H/2 + U x sw/2 – Wt x 0.6 x sw/2) / sw
   = ((1260 lb x 42/2 in) + (1140 lb x 48/2 in) –
   (250 lb x 0.6 x 48/2 in)) / 48 in **= 1046 lb**

IN ALL CONDITIONS IT IS THE RESPONSIBILITY OF THE PERMIT HOLDER TO ENSURE THE HOST STRUCTURE IS CAPABLE OF WITHSTANDING THE RATED GRAVITY, LATERAL, AND UPLIFT FORCES BY SITE-SPECIFIC DESIGN. NO WARRANTY OF ANY KIND, EXPRESSED OR IMPLIED, IS OFFERED BY ENGINEERING EXPRESS AS TO THE INTEGRITY OF THE HOST STRUCTURE TO CARRY DESIGN FORCE LOADS INCURRED BY THIS UNIT.