MIAMI-DADE COUNTY
PRODUCT CONTROL SECTION
11805 SW 26 Street, Room 208
Miami, Florida 33175-2474
T (786) 315-2590 F (786) 315-2599
www.miamidade.gov/economy

DEPARTMENT OF REGULATORY AND ECONOMIC RESOURCES (RER)
BOARD AND CODE ADMINISTRATION DIVISION

NOTICE OF ACCEPTANCE (NOA)

Nu-Vue Industries, Inc.
1055 E. 29 Street
Hialeah, Florida 33013

SCOPE: This NOA is being issued under the applicable rules and regulations governing the use of construction materials. The documentation submitted has been reviewed and accepted by Miami-Dade County RER-Product Control Section to be used in Miami Dade County and other areas where allowed by the Authority Having Jurisdiction (AHJ).

This NOA shall not be valid after the expiration date stated below. The Miami-Dade County Product Control Section (In Miami Dade County) and/or the AHJ (in areas other than Miami Dade County) reserve the right to have this product or material tested for quality assurance purposes. If this product or material fails to perform in the accepted manner, the manufacturer will incur the expense of such testing and the AHJ may immediately revoke, modify, or suspend the use of such product or material within their jurisdiction. RER reserves the right to revoke this acceptance if it is determined by Miami-Dade County Product Control Section that this product or material fails to meet the requirements of the applicable building code.

This product is approved as described herein and has been designed to comply with the Florida Building Code, including the High Velocity Hurricane Zone.

DESCRIPTION: Series NVJH, NVTP/H, NVSO and NVHC Steel Wood Connectors

APPROVAL DOCUMENT: Drawing No. **JA-2029.2-23**, titled "SERIES NVJH, NVTP/H, NVSO AND NVHC STEEL WOOD CONNECTORS", sheets 1 through 4 of 4, dated 01/11/2024, prepared by Javad Ahmad PE, Inc., signed and sealed by Javad Ahmad, P.E. on 02/06/2024, bearing the Miami-Dade County Product Control revision stamp with the Notice of Acceptance number and expiration date by the Miami-Dade County Product Control Section.

MISSILE IMPACT RATING: None

LABELING: A permanent mark with the manufacturer's name, acronym or logo is to be located on each unit. A permanent label with the manufacturer's name or logo, city, state, model/series, and the statement reading 'Miami-Dade County Product Control Approved' is to be located on each packaging carton.

RENEWAL of this NOA shall be considered after a renewal application has been filed and there has been no change in the applicable building code negatively affecting the performance of this product.

TERMINATION of this NOA will occur after the expiration date or if there has been a revision or change in the materials, use, and/or manufacture of the product or process. Misuse of this NOA as an endorsement of any product, for sales, advertising or any other purposes shall automatically terminate this NOA. Failure to comply with any section of this NOA shall be cause for termination and removal of NOA.

ADVERTISEMENT: The NOA number preceded by the words Miami-Dade County, Florida, and followed by the expiration date may be displayed in advertising literature. If any portion of the NOA is displayed, then it shall be done in its entirety.

INSPECTION: A copy of this entire NOA shall be provided to the user by the manufacturer or its distributors and shall be available for inspection at the job site at the request of the Building Official.

This NOA **revises and renews NOA # 23-0314.04** and consists of this page 1 and evidence pages E-1, E-2, and E-3, as well as approval document mentioned above.

The submitted documentation was reviewed by **Sifang Zhao, P.E.**

MIAMI-DADE COUNTY APPROVED

S.Z.

04/11/2024

NOTICE OF ACCEPTANCE: EVIDENCE SUBMITTED

1. EVIDENCE SUBMITTED UNDER PREVIOUS NOAs

A. DRAWINGS

1. Drawing No. **NU-3**, titled "NVJH Joist Supports, NVTP & NVTPH Plate Anchors, NVSO 236 Joist Hanger, NVHC 43 & NVHC 43/2 Hurricane Clip", sheets 1 through 3 of 3, dated 06/25/2020, prepared by Nu-Vue Industries, Inc., signed and sealed by Vipin N. Tolat, P.E. ***"Submitted under NOA # 20-0610.01"***

B. TESTS *"Submitted under NOA # 03-0730.03"*

Test reports on wood connectors per ASTM D1761 by Product Testing, Inc., signed and sealed by C. R. Caudel, P.E.

	Report No.	Wood Connector	Direction	Date
1.	PT # 03-4303	NVTP4	Upward	04/21/03
2.	PT # 03-4343	NVTP4H	Upward	05/05/03
3.	PT # 03-4344	NVTP4	Upward	05/01/03
4.	PT # 03-4345	NVTP4H	Upward	05/02/03
5.	PT # 03-4349	NVSO236	Up & Down	05/19/03
6.	PT # 03-4357	NVSO236	Up & Down	05/20/03
7.	PT # 03-4358	NVJH24	Up & Down	05/30/03
8.	PT # 03-4385	NVJH26	Up & Down	05/30/03
9.	PT # 03-4386	NVSO236	Up & Down	05/13/03
10.	PT # 03-4387	NVJH28	Up & Down	05/30/03

C. CALCULATIONS *"Submitted under NOA # 05-0516.01"*

1. Report of Design Capacities, dated 07/13/2005, sheets 1 through 5 of 5, prepared, signed and sealed by Vipin N. Tolat, P.E.

2. Report of Design Capacities, dated 07/22/2003, sheets 1 through 13 of 13, prepared, signed and sealed by Vipin N. Tolat, P.E. ***"Submitted under NOA # 03-0730.03"***

3. Verification calculations for compliance with the ASTM D7147-05 and ASTM D7147-11, prepared by Vipin N. Tolat, P.E. dated 05/17/2020, signed and sealed by Vipin N. Tolat, P.E. ***"Submitted under NOA # 20-0610.01"***

D. QUALITY ASSURANCE

1. Miami-Dade Department of Regulatory and Economic Resources (RER)

E. MATERIAL CERTIFICATIONS

1. None.

Sifang Zhao, P.E.
Product Control Examiner
NOA No. 24-0213.09
Expiration Date: July 30, 2030
Approval Date: April 11, 2024

NOTICE OF ACCEPTANCE: EVIDENCE SUBMITTED

F. STATEMENTS

1. Statement letter of code conformance to 2010 and 5th (2014) edition of the FBC, issued by Vipin N. Tolat, P.E., dated 04/29/2015, signed and sealed by Vipin N. Tolat, P.E.

2. Statement letter of code conformance, no financial interest and no change of product, dated 08/21/2008, issued, signed and sealed by Vipin N. Tolat, P.E. ***"Submitted under NOA # 08-0828.02"***

3. Statement letter of code conformance to the 5th Edition (2014) and 6th Edition (2017) FBC and of no financial interest, issued by Vipin N. Tolat, P.E., dated 07/25/2017, signed and sealed by Vipin N. Tolat, P.E. ***"Submitted under NOA # 17-0802.08"***

4. Statement letter of code conformance to the 6th Edition (2017) and the 7th Edition (2020) FBC and of no financial interest, issued by Vipin N. Tolat, P.E., dated 06/25/2020, signed and sealed by Vipin N. Tolat, P.E. ***"Submitted under NOA # 20-0610.01"***

Sifang Zhao, P.E.
Product Control Examiner
NOA No. 24-0213.09
Expiration Date: July 30, 2030
Approval Date: April 11, 2024

NOTICE OF ACCEPTANCE: EVIDENCE SUBMITTED

2. EVIDENCE SUBMITTED NOA#23-0314.04 and newer

A. DRAWINGS

1. Drawing No. **JA-1958.2-22**, titled "NOA No. 20-0610.01 Revision", sheets 1 through 4 of 4, dated 02/28/2023, prepared by Javad Ahmad PE, Inc., signed and sealed by Javad Ahmad, P.E. on 04/11/2023. ***"Submitted under NOA # 23-0314.04"***

2. Drawing No. **JA-2029.2-23**, titled "SERIES NVJH, NVTP/H, NVSO AND NVHC STEEL WOOD CONNECTORS", sheets 1 through 4 of 4, dated 01/11/2024, prepared by Javad Ahmad PE, Inc., signed and sealed by Javad Ahmad, P.E. on 02/06/2024. ***"Submitted under NOA # 24-0213.09"***

B. TESTS

1. None.

C. CALCULATIONS

1. Allowable loads calculations, prepared by Javad Ahmad PE, Inc., dated 04/11/2023, signed and sealed by Javad Ahmad, P.E. ***"Submitted under NOA # 23-0314.04"***

2. Allowable loads calculations, prepared by Javad Ahmad PE, Inc., dated 01/23/2024, signed and sealed by Javad Ahmad, P.E. ***"Submitted under NOA #24-0213.09"***

D. QUALITY ASSURANCE

1. Miami-Dade Department of Regulatory and Economic Resources (RER).

E. MATERIAL CERTIFICATIONS

1. None.

F. STATEMENT

1. Statement letter of code conformance to the 7th Edition (2020) of the FBC and of no financial interest, issued by Javad Ahmad PE, Inc., dated 03/01/2023, signed and sealed by Javad Ahmad, P.E. ***"Submitted under NOA #23-0314.04"***

2. Statement letter of code conformance to the 8th Edition (2023) of the FBC and of no financial interest, issued by Javad Ahmad PE, Inc., dated 01/23/2024, signed and sealed by Javad Ahmad, P.E. ***"Submitted under NOA #24-0213.09"***

Sifang Zhao, P.E.
Product Control Examiner
NOA No. 24-0213.09
Expiration Date: July 30, 2030
Approval Date: April 11, 2024

NU-VUE INDUSTRIES, INC.

1055 EAST 29TH HIALEAH, FL 33013, TEL. 305-694-0397

NVJH JOIST SUPPORTS

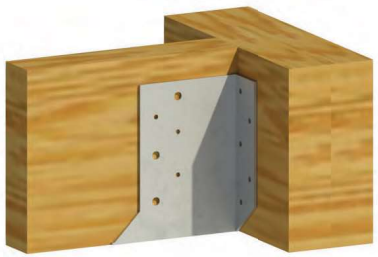

NVTP & NVTPH TOP PLATE ANCHORS

NVSO 236 FACE MOUNT JOIST HANGER

NVHC 43 & 43/2 HURRICANE CLIPS

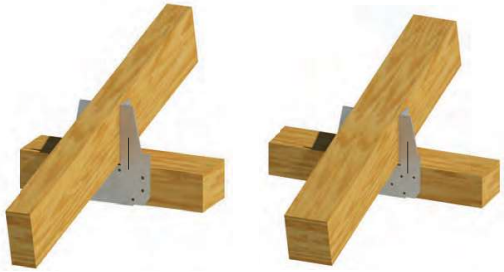

GENERAL NOTES:

1. ALLOWABLE LOADS AND ALL FASTENERS ARE BASED ON NATIONAL DESIGN SPECIFICATIONS (NDS) FOR WOOD CONSTRUCTION 2018.
2. DESIGN LOADS ARE BASED ON SOUTHERN YELLOW PINE WOOD SPECIES WITH A SPECIFIC GRAVITY OF 0.55. ALLOWABLE LOADS FOR OTHER SPECIES OR CONDITIONS MUST BE ADJUSTED ACCORDING TO NDS 2018.
3. THIS CATALOG REFLECTS DESIGN CHANGES AND DESIGN ADJUSTMENTS TO SOME NU-VUE PRODUCTS. THE TABLES AND NOTES IN THIS CATALOG SUPERCEDE ALL PREVIOUS DOCUMENTS. NU-VUE RESERVES THE RIGHT TO CHANGE DESIGN SPECIFICATIONS WITHOUT NOTICE AND IS NOT LIABLE FOR SUCH CHANGES.
4. DESIGN LOADS DO NOT INCLUDE 33% INCREASE FOR STEEL AND CONCRETE.
5. ALLOWABLE UPLIFT LOADS HAVE BEEN ADJUSTED FOR LOAD DURATION FACTOR CD OF 1.6. APPLICABLE TO WIND AND EARTHQUAKE LOAD PER NDS 2018.
6. DESIGN CONFORMS TO 2023 EDITION OF FLORIDA BUILDING CODE AND NDS 2018.
7. COMBINED LOAD OF UPLIFT, L1 AND L2 SHALL SATISFY THE FOLLOWING EQUATION.

$$\frac{\text{ACTUAL UPLIFT}}{\text{ALLOWABLE UPLIFT}} + \frac{\text{ACTUAL L1}}{\text{ALLOWABLE L1}} + \frac{\text{ACTUAL L2}}{\text{ALLOWABLE L2}} <= 1.0$$

8. ALL TESTS HAVE BEEN CONDUCTED IN ACCORDANCE WITH ASTM D-1761.
9. THE DESIGN LOADS LISTED ARE BASED ON THE LEAST VALUE OF THE FOLLOWING:
   1. THE LOWEST ULTIMATE LOAD DIVIDED BY THREE.
   2. THE LOWEST LOAD PRODUCING 1/8 " DEFLECTION.
   3. CALCULATIONS BASED ON NDS,AISI AND OTHER APPLICABLE CODES.

REFERENCES:

1. AISC 360-16
2. AISI S100-16
3. FBC 2023
4. ACI 318-19

MATERIAL

1. *WOOD*
   WOOD MEMBERS MUST BE S.P. NO. 1, SPECIFIC GRAVITY 0.55 OR AN APPROVED MEMBER WITH AN EQUIVALENT GRADE. DESIGN LOADS FOR OTHER SPECIES SHALL BE ADJUSTED PER NDS 2018. WOOD MEMBERS SHALL HAVE A MOISTURE CONTENT NOT EXCEEDING 19 PERCENT (16 PERCENT FOR STRUCTURAL ENGINEERED LUMBER). WOOD MEMBERS MUST BE USED UNDER CONTINUOUSLY DRY CONDITIONS AND WHERE SUSTAINED TEMPERATURES ARE LIMITED TO 100° F.
2. *PRESERVATIVE AND FIRE RETARDANT WOOD*
   CONNECTORS OR FASTENERS USED IN CONTACT WITH PRESERVATIVE-TREATED AND FIRE-RETARDANT-TREATED WOOD SHALL BE IN ACCORDANCE WITH SECTION 2304.10.5.
3. *NAIL*
   NAILS SHALL MEET THE REQUIREMENTS IN TABLE AND THE REQUIREMENTS SPECIFIED IN ASTM F 1667.
4. *GFCMU MASONRY*
   MATERIAL AND QUALITY OF MASONRY CONSTRUCTION MUST COMPLY WITH THE APPLICABLE SECTIONS OF FBC 2023. MINIMUM CONCRETE OR GROUT COMPRESSIVE STRENGTH SHALL BE 1500 PSI. CONCRETE MASONRY SHALL COMPLY WITH ASTM C90
5. *CONCRETE*
   MINIMUM CONCRETE COMPRESSIVE STRENGTH SHALL BE 2500 PSI.
6. *STEEL*
   CONNECTOR STEEL SHALL CONFORM TO ASTM A653 SS GRADE 33, MIN. YIELD 33 KSI, MIN. TENSILE STRENGTH 45 KSI AND MIN. GALVANIZED COATING OF G 60 PER ASTM A653.

PRODUCT REVISED
as complying with the Florida Building Code
NOA-No. 24-0213.09
Expiration Date 07/30/2030
By
Miami-Dade Product Control

JAVAD AHMAD PE, inc
8800 NW 23rd St, Miami FL
33172
Ph: (305) 424-8001
support@ja-pe.com
CONSULTING • STRUCTURAL DESIGN • FACADES • BUILDING ENVELOPE • SYSTEM DESIGN • PRODUCT APPROVALS

SERIES NVJH, NVTP/H, NVSO AND NVHC
STEEL WOOD CONNECTORS

NU-VUE INDUSTRIES, INC
1055 East 29th Street
Hialeah, FL. 33013

drawing no.	JA-2029.2-23	drawn by:	BVS
date:	01/11/2024	check by:	SJ

REVISION

No.	DATE	BY	DESCRIPTION

Digitally signed by Javad Ahmad
Date: 2024.02.06 12:13:33 -05'00'

1	1 OF 4

NVJH JOIST SUPPORTS

TABLE 1
JOIST SUPPORTS

18G NVJH JOIST SUPPORTS										ALLOWABLE LOADS (lbs.)		
PRODUCT CODE	DIMENSIONS (in.)			JOIST SIZE	DOUBLE HEADER SIZE	SINGLE HEADER SIZE	FASTENERS			GRAVITY LOADS (100% LOADS)		UPLIFT LOADS (160% LOADS)
	W	H	BS				DOUBLE HEADER	SINGLE HEADER	JOISTS	DOUBLE HEADER	SINGLE HEADER	SINGLE & DOUBLE HEADERS
NVJH24	1-5/8	3-5/8	3	2x4 2x6	2 - 2x4 2 - 2x6	2x4 2x6	6 - 10d	6 - 10d x 1-1/2"	4 - 10d x 1-1/2"	744	744	-
NVJH26	1-5/8	5	3	2x6 2x8	2 - 2x6 2 - 2x8	2x6 2x8	10 - 10d	10 - 10d x 1-1/2"	6 - 10d x 1-1/2"	1240	1240	821
NVJH28	1-5/8	6-3/4	3	2x8 2x10 2x12	2 - 2x8 2 - 2x10 2 - 2x12	2x8 2x10 2x12	14 - 10d	14 - 10d x 1-1/2"	7 - 10d x 1-1/2"	1736	1736	1079

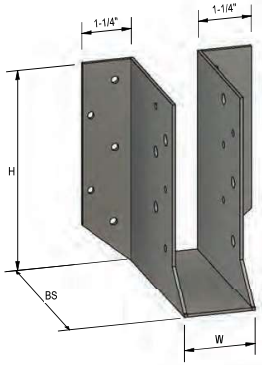

NVJH 26 AS SHOWN
NVJH 24 & 28 SIMILAR BUT
WITH DIFFERENT HOLES

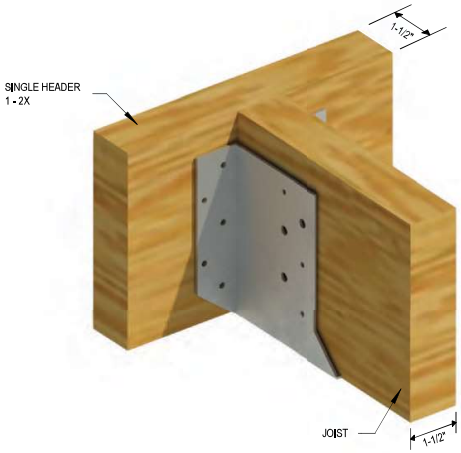

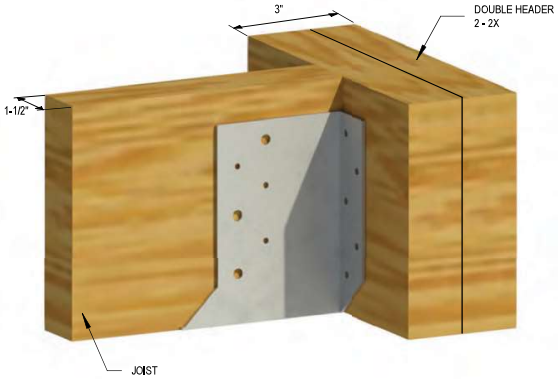

NOTES:

1. SEE GENERAL NOTES, SHEET 1.

PRODUCT REVISED
as complying with the Florida Building Code
NOA–No. 24-0213.09
Expiration Date 07/30/2030
By
Miami–Dade Product Control

JAVAD AHMAD PE, inc
8800 NW 23rd St, Miami FL
33172
Ph: (305) 424-8001
support@ja-pe.com
CONSULTING • STRUCTURAL DESIGN • FACADES • BUILDING ENVELOPE • SYSTEM DESIGN • PRODUCT APPROVALS

SERIES NVJH, NVTP/H, NVSO AND NVHC
STEEL WOOD CONNECTORS

NU-VUE INDUSTRIES, INC
1055 East 29th Street
Hialeah, FL. 33013

drawing no.	JA-2029.2-23	drawn by:	BVS
date:	01/11/2024	check by:	SJ

REVISION

No.	DATE	BY	DESCRIPTION

Digitally signed by Javad Ahmad
Date: 2024.02.06 12:14:07 -05'00'

NVTP/NVTPH & NVSO 236

TABLE 2
TOP PLATE ANCHORS NVTP & NVTPH

SIZE	PRODUCT COCE	GAUGE	DIMENSIONS (in.)	
			A	B
2x4 / 4x4	NVTP4	20	3-5/8"	8"
2x6 / 4x6	NVTP6	20	5-5/8"	8"
2x8 / 4x8	NVTP8	20	7-3/8"	8"
2x4 / 4x4	NVTP4H	18	3-5/8"	8"
2x6 / 4x6	NVTP6H	18	5-5/8"	8"
2x8 / 4x8	NVTP8H	18	7-3/8"	8"

PRODUCT CODE	*TOTAL NUMBER OF FASTENERS 10d x 1-1/2" MAX. UPLIFT CAPACITY (lbs.)			
	6	8	10	12
NVTP 4,6,8	828	1087	1346	1605
NVTP 4H, 6H, 8H	938	1207	1476	1745

TABLE 3
NVSO 236, 16 GAUGE, HEAVY DUTY
FACE MOUNT JOIST HANGER

JOIST SIZE	HEADER SIZE	FASTENERS		ALLOWABLE LOADS (lbs.)	
		HEADER	JOIST	GRAVITY 100%	UPLIFT 160%
2x6 - 8	2 - 2x8 2 - 2x10 2 - 2x12	14-10d	6-10d	1688	1064
		14-16d	6-16d	1800	1228
		4 - 3/8" x 3" LAG SCREWS	6-16d	856	1168

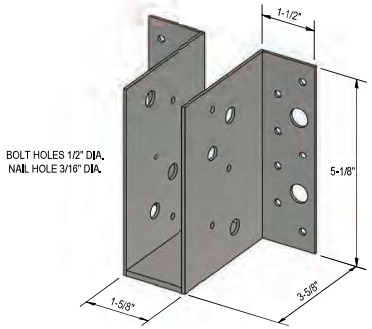

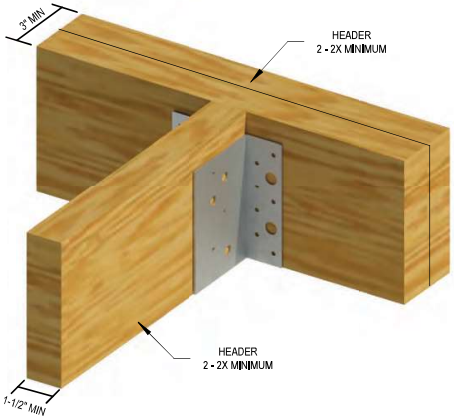

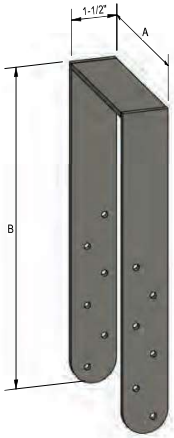

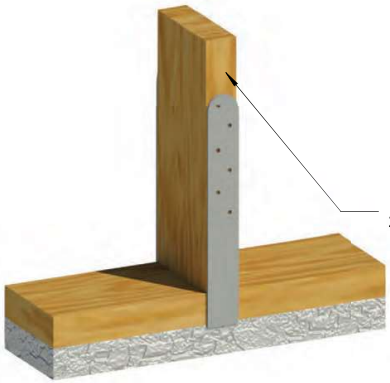

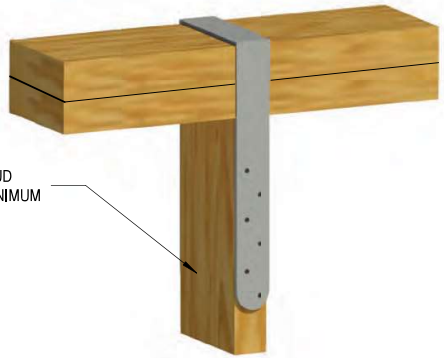

NOTES:

1. SEE GENERAL NOTES ON SHEET 1
2. *ONE HALF OF ALL SPECIFIED FASTENERS SHALL BE USED ON EACH SIDE OF STUD TO ACHIEVE TABULATED VALUES.

PRODUCT REVISED
as complying with the Florida Building Code
NOA–No. 24-0213.09
Expiration Date 07/30/2030
By
Miami–Dade Product Control

JAVAD AHMAD PE, inc
8800 NW 23rd St, Miami FL
33172
Ph: (305) 424-8001
support@ja-pe.com
CONSULTING • STRUCTURAL DESIGN • FACADES • BUILDING ENVELOPE • SYSTEM DESIGN • PRODUCT APPROVALS

SERIES NVJH, NVTP/H, NVSO AND NVHC
STEEL WOOD CONNECTORS

NU-VUE INDUSTRIES, INC
1055 East 29th Street
Hialeah, FL. 33013

drawing no.	JA-2029,2-23
date:	01/11/2024
drawn by:	BVS
check by:	SJ

REVISION

No.	DATE	BY	DESCRIPTION

Digitally signed by Javad Ahmad
Date: 2024.02.06 12:14:23 -05'00'

18G NVHC 43 & 43/2 HURRICANE CLIP

TABLE 4
18 GAUGE NVHC 43 & NVHC 43/2 HURRICANE CLIP

PRODUCT CODE	DESCRIPTION	FASTENERS		DESIGN LOADS (lbs.)		
		HEADER	JOIST	UPLIFT	L1	L2
NVHC 43	HURRICANE CLIP - WIDE	9-10d	9-10d	687*	407	308
NVHC 43 / 2	HURRICANE CLIP - WIDE x 2	10-10d	10-10d	917	547	432

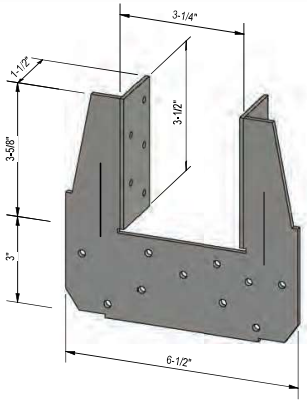

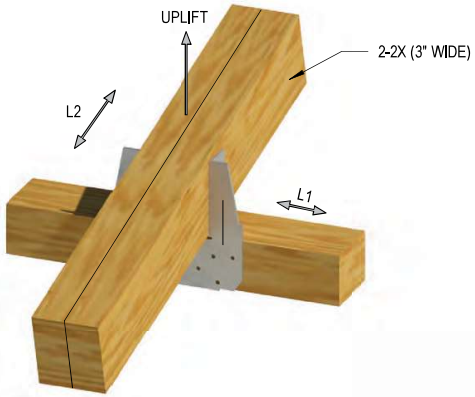

NVHC 43/2

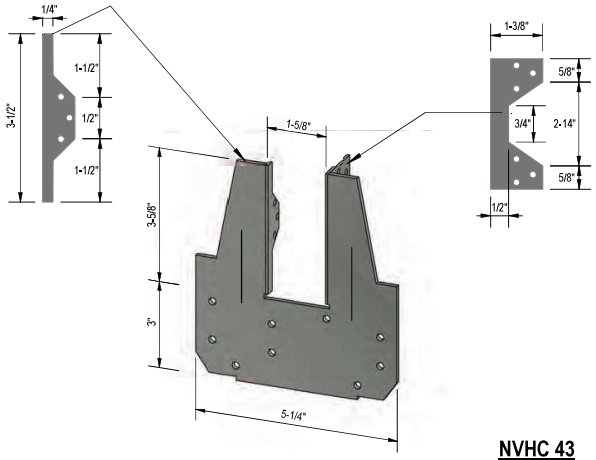

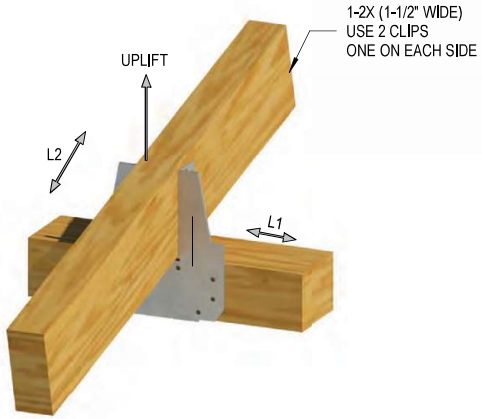

NVHC 43

NOTES:

1. SEE GENERAL NOTES ON SHEET 1
2. * FOR UPLIFT, USE TWO CLIPS, ONE ON EACH SIDE TO COMPLY WITH SECTION 2321.7 OF THE FBC

PRODUCT REVISED
as complying with the Florida Building Code
NOA–No. 24-0213.09
Expiration Date 07/30/2030
By
Miami–Dade Product Control

JAVAD AHMAD PE, inc
8800 NW 23rd St, Miami FL
33172
Ph: (305) 424-8001
support@ja-pe.com
CONSULTING • STRUCTURAL DESIGN • FACADES • BUILDING ENVELOPE • SYSTEM DESIGN • PRODUCT APPROVALS

SERIES NVJH, NVTP/H, NVSO AND NVHC STEEL WOOD CONNECTORS

NU-VUE INDUSTRIES, INC
1055 East 29th Street
Hialeah, FL. 33013

drawing no. JA-2029,2-23
date: 01/11/2024
drawn by: BVS
check by: SJ

No.	DATE	BY	DESCRIPTION

REVISION

Digitally signed by Javad Ahmad
#70592
2024.02.06 12:14:56 -05'00'