ALUPROF
MB-SR50N STOREFRONT SYSTEM

FL# 46591

SHEET INDEX	
101	COVER PAGE
102	TYPICAL ELEVATIONS
103	GLAZING DETAIL & LOADING CHART
104	JAMB AND MULLION PROFILE
105	MULLION LOAD CAPACITY CHART
106	MULLION LOAD CAPACITY CHART
107	TRANSOM LOAD CAPACITY CHART
108	SECTIONAL DETAILS
109	SECTIONAL DETAILS
110	SECTIONAL DETAILS
111	ANCHORAGE DETAILS
112	F-BRACKET DETAIL
113	F-BRACKET DETAIL
114	F-BRACKET DETAIL
115	F-BRACKET DETAIL
116	F-BRACKET DETAIL
117	F-BRACKET DETAIL
118	ACTIVE BRACKET DETAIL
119	CORNER BRACKET DETAIL
120	CORNER BRACKET DETAIL
121	ALTERNATIVE F-BRACKET DETAIL
122	ALTERNATIVE T-BRACKET DETAIL
123	F-BRACKET ANCHORAGE DETAILS
124	T-BRACKET ANCHORAGE DETAILS
125	PARTS LIST
126	PARTS LIST
127	PARTS LIST
128	BILL OF MATERIALS
129	BILL OF MATERIALS
130	FRAME ASSEMBLY DETAILS

NOTE:
THIS PRODUCT CAN BE COMBINED WITH OTHER FBC APPROVED ALUPROF SA'S PRODUCTS. PLEASE REFER TO ALUPROF SA'S FBC APPROVED DOOR SYSTEMS TO DETERMINE THE APPROVED SIZES AND PRESSURES. WHEN MULLED COMBINATIONS ARE USED, THE LOWER DESIGN PRESSURE FROM EACH PRODUCT WILL APPLY TO THE ENTIRE SYSTEM. FINAL APPROVAL OF ALL DESIGNS SHALL BE GRANTED BY THE GOVERNING MUNICIPALITY.

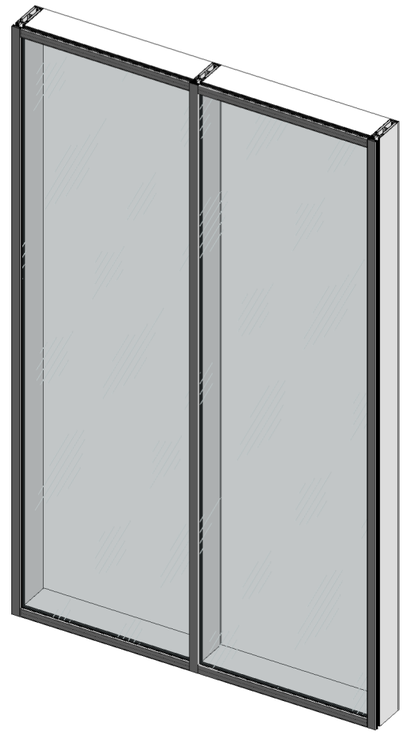

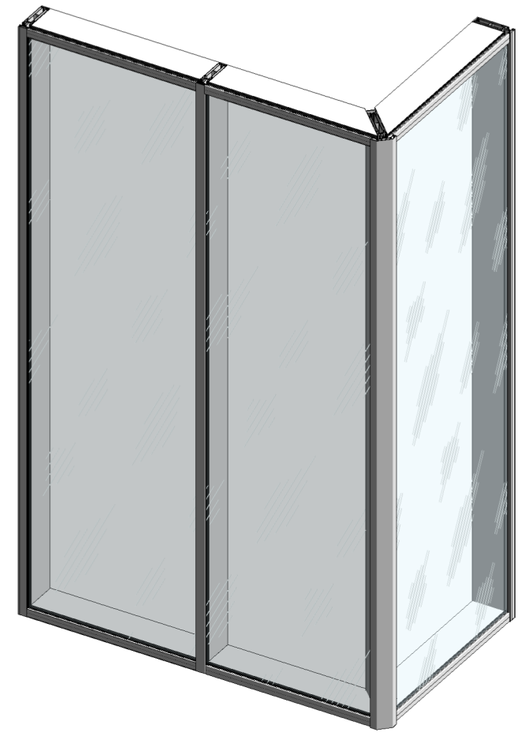

MB-SR50N STOREFRONT SYSTEM

GENERAL NOTES

1. THIS SYSTEM DESCRIBED HEREIN HAS BEEN DESIGNED AND TESTED IN ACCORDANCE WITH THE FLORIDA BUILDING CODE EIGHTH EDITION (2023), FOR USE WITHIN AND OUTSIDE THE HIGH VELOCITY HURRICANE ZONE (HVHZ) PER TAS 201/202/203 AND ASTM E283 & E331.
2. GLASS CAPACITIES FOUND IN THE CHARTS HEREIN THIS CERTIFICATION ARE BASED ON ASTM E1300-16 (3 SEC. GUSTS).
3. DESIGN PRESSURES NOTED HERE IN ARE BASED ON MAXIMUM TESTED PRESSURES DIVIDED BY A 1.5 SAFETY FACTOR.
4. PRESSURES PROVIDED IN THE CERTIFICATION ARE BASED ON THE ALLOWABLE STRESS DESIGN METHOD (ASD).
5. THIS PRODUCT HAS BEEN TESTED IN ACCORDANCE WITH THE STANDARDS IN NOTE 1 OF THE GENERAL NOTES AND IS LARGE MISSILE IMPACT RESISTANT AND DOES NOT REQUIRE IMPACT RESISTANT SHUTTERS.
6. NO 33-1/3% INCREASE IN ALLOWABLE STRESS HAS BEEN USED IN THE DESIGN OF THIS SYSTEM. WIND LOAD DURATION FACTOR Cd=1.6 HAS BEEN USED FOR WOOD ANCHOR DESIGN.
7. THE ARCHITECT/ENGINEER OF RECORD FOR THE PROJECT SUPERSTRUCTURE WITH WHICH THIS DESIGN IS USED SHALL BE RESPONSIBLE FOR THE INTEGRITY OF ALL SUPPORTING SURFACES TO THIS DESIGN WHICH SHALL BE COORDINATED BY THE PERMITTING CONTRACTOR. WOOD BUCKS (BY OTHERS) SHALL BE ANCHORED PROPERLY TO TRANSFER LOADS TO THE EXISTING STRUCTURE.
8. THE SYSTEM DETAILED HEREIN IS GENERIC AND DOES NOT PROVIDE INFORMATION FOR A SPECIFIC SITE. FOR SITE CONDITIONS DIFFERENT FROM THE CONDITIONS DETAILED HEREIN, A LICENSED ENGINEER OR REGISTERED ARCHITECT SHALL PREPARE SITE SPECIFIC DOCUMENTS FOR USE IN CONJUNCTION WITH THIS DOCUMENT.
9. THE CONTRACTOR IS RESPONSIBLE FOR INSULATING ALL MEMBERS FROM DISSIMILAR MATERIALS TO PREVENT ELECTROLYSIS (EXAMPLE: STEEL WITH ALUMINUM).
10. FASTENERS DESCRIBED IN THIS CERTIFICATION ARE PERMITTED TO BE SUBSTITUTE PROVIDED THE STRENGTH OF THE ALTERNATIVE ANCHOR IS EQUAL TO OR GREATER THAN THE ORIGINALLY SPECIFIED ANCHOR. FINAL APPROVAL OF SUBSTITUTED ANCHORS SHALL BE BY OTHERS.
11. FASTENERS SHALL BE CADMIUM PLATED OR OTHERWISE CORROSION-RESISTANT MATERIAL AND SHALL COMPLY WITH "SPECIFICATIONS FOR ALUMINUM STRUCTURES" SECTION J.3 OF THE CURRENT CODE BY THE ALUMINUM ASSOCIATION, INC., & ANY APPLICABLE FEDERAL, STATE, AND/OR LOCAL CODES.
12. ENGINEER'S SEAL AFFIXED HERE VALIDATES THE STRUCTURAL DESIGN AS SHOWN ONLY. THE USE OF THIS SPECIFICATION BY THE CONTRACTOR, ET AL., INDEMNIFIES AND SAVES HARMLESS THIS ENGINEER FROM ALL COSTS AND DAMAGES, INCLUDING LEGAL FEES AND APPELLATE FEES, RESULTING FROM MATERIAL FABRICATION, SYSTEM ERECTION, AND CONSTRUCTION PRACTICES BEYOND THAT WHICH IS CALLED FOR BY LOCAL, STATE, AND FEDERAL CODES, AND FROM DEVIATIONS OF THIS PLAN.
13. THIS PRODUCT IS APPROVED FOR FORCED ENTRY RESISTANCE AS PER ASTM F588-07.
14. EXCEPT AS EXPRESSLY PROVIDED HEREIN, NO ADDITIONAL CERTIFICATIONS OR AFFIRMATIONS ARE INTENDED.
15. ALTERATIONS, ADDITIONS, OR OTHER MARKINGS TO THIS DOCUMENT ARE NOT PERMITTED AND INVALIDATE THIS CERTIFICATION.
16. SAFEGUARDS MUST BE OBSERVED (NOT IN THIS CERTIFICATION).
17. PRODUCT SHALL BE PERMANENTLY LABELED WITH A MINIMUM OF ONE LABEL PER SYSTEM CONTAINING THE FOLLOWING:
    ALUPROF SA
    UL. WARSZAWSKA 153, 43-300 BIELSKO-BIAŁA, POLAND
    TAS 201/202/203
    APPROVED BY FLORIDA BUILDING COMMISSION
    FLORIDA PRODUCT APPROVAL NUMBER FL# 46591

THIS SYSTEM IS APPROVED FOR INSTALLATION WHERE WATER INFILTRATION RESISTANCE IS REQUIRED.

THIS SYSTEM IS RATED FOR LARGE & SMALL MISSILE IMPACT.

DESIGN PRESSURES:

FOR GLAZING : SEE SHEET 103
FOR MULLIONS : SEE SHEET 105-107
FOR BRACKETS : SEE SHEET 123-124

NOTES:

ALLOWABLE PRESSURE CAPACITY OF THE SYSTEM IS MINIMUM OF THE DESIGN PRESSURE FOR GLASS, DESIGN PRESSURE FOR MULLION AND DESIGN PRESSURE FOR THE BRACKET.

ADDITIONAL DETAILS:

FOR SPECIAL SITE CONDITION, CONTACT ALUPROF SA

JAVAD AHMAD PE, inc
7875 NW 12 Street, Suite 102
Doral, FL 33126
Ph: (305) 424-8001
support@ja-pe.com
CONSULTING • STRUCTURAL DESIGN • FACADES • BUILDING ENVELOPE • SYSTEM DESIGN • PRODUCT APPROVALS

PROJECT :
MB-SR50N STOREFRONT SYSTEM

CLIENT :
ALUPROF SA

UL.WARSZAWSKA 153, 43-300
BIELSKO-BIALA, POLAND

REVISION

No.	DATE	BY	DESCRIPTION

date:	12-20-2024
scale:	N/A
drawn by:	MK
check by:	BS
Drawing no.	JA-1985-24

Eng: JAVAD AHMAD, PE
CIVIL FLA. PE # 70592 - C.A.N.34254

JAVAD AHMAD LICENSE No 70592 STATE OF FLORIDA PROFESSIONAL ENGINEER

12-20-2024

TYPICAL ELEVATIONS

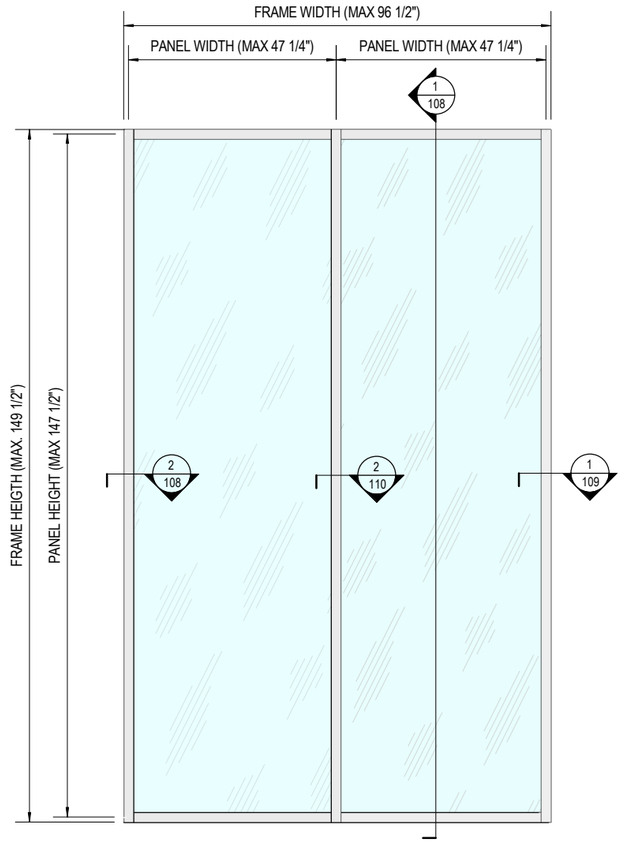

1 / 102 **TYPICAL ELEVATION 1**
N.T.S.

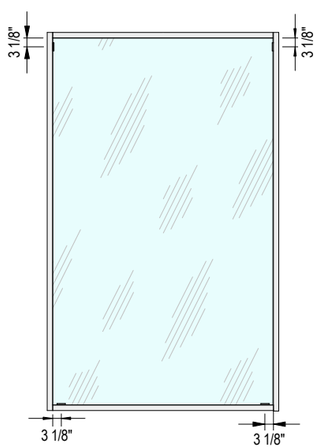

SETTING BLOCKS LAYOUT

NOTE:

- THIS PRODUCT CAN BE COMBINED WITH ANY OTHER FBC APPROVED GLAZING SYSTEM.
- WHEN COMBINATION OF TWO OR MORE SYSTEMS ARE USED, THE LOWER DESIGN PRESSURE FROM EACH SYSTEM WILL APPLY TO THE ENTIRE SYSTEM.
- FINAL APPROVAL OF ALL DESIGNS SHALL BE GRANTED.

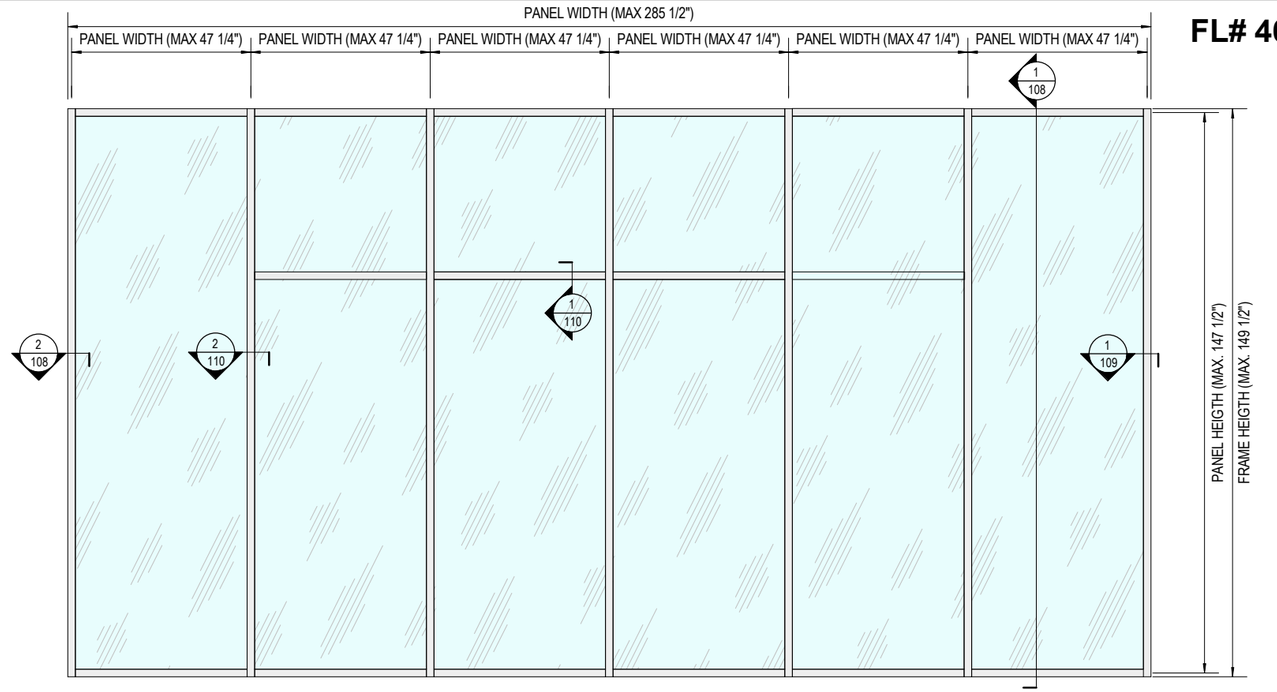

2 / 102 **TYPICAL ELEVATION 2**
N.T.S.

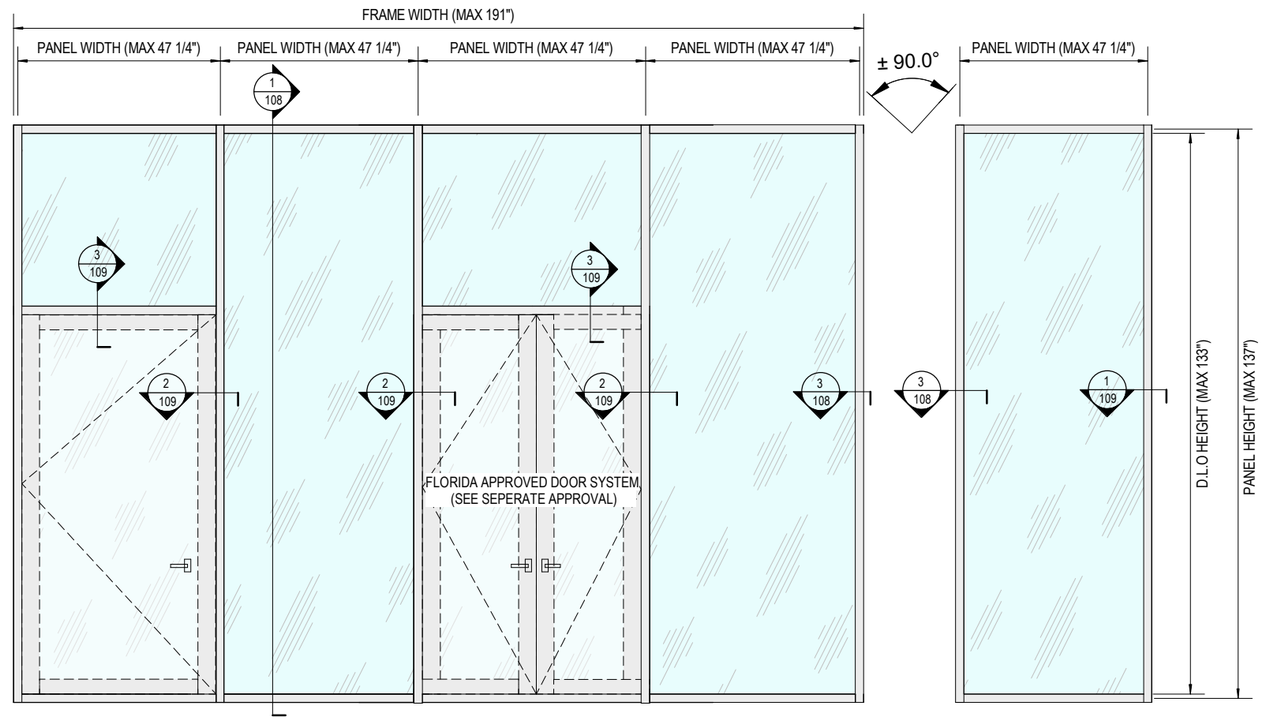

3 / 102 **TYPICAL ELEVATION CORNER SYSTEM**
N.T.S.

FL# 46591

JAVAD AHMAD PE, inc
7875 NW 12 Street, Suite 102
Doral, FL 33126
Ph: (305) 424-8001
support@ja-pe.com
CONSULTING • STRUCTURAL DESIGN • FACADES • BUILDING ENVELOPE • SYSTEM DESIGN • PRODUCT APPROVALS

PROJECT :

MB-SR50N STOREFRONT SYSTEM

CLIENT :

ALUPROF SA

UL.WARSZAWSKA 153, 43-300
BIELSKO-BIALA, POLAND

REVISION

No.	DATE	BY	DESCRIPTION

date:	12-20-2024
scale:	N/A
drawn by:	MK
check by:	BS
Drawing no.	JA-1985-24

Eng: JAVAD AHMAD, PE
CIVIL FLA. PE # 70592 - C.A.N.34254

JAVAD AHMAD LICENSE No 70592 STATE OF FLORIDA PROFESSIONAL ENGINEER

12-20-2024

GLAZING DETAIL & LOADING CHART

FL# 46591

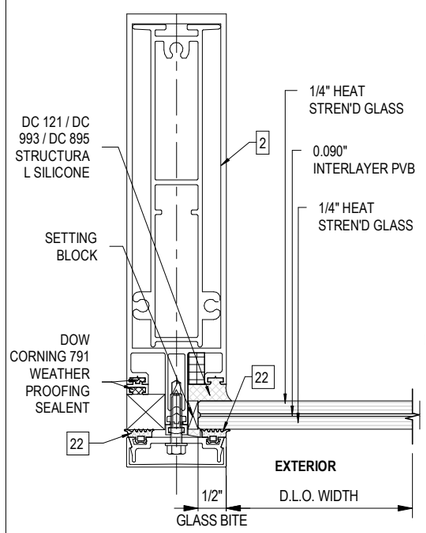

GLASS TYPE "1"

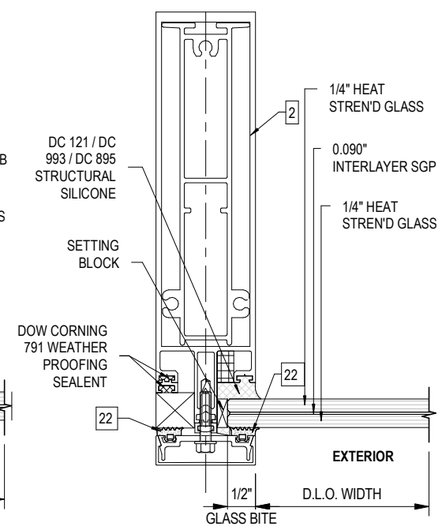

GLASS TYPE "2"

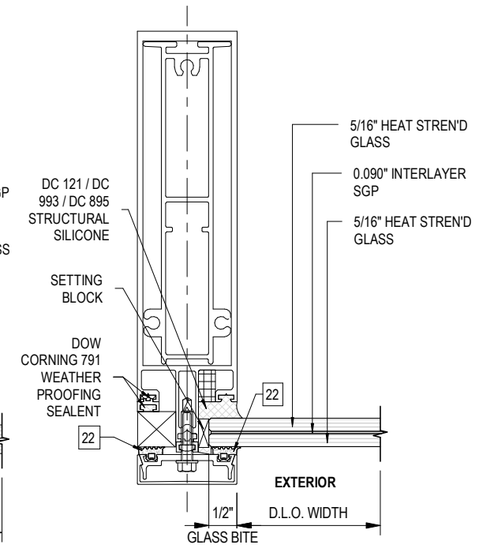

GLASS TYPE "3"

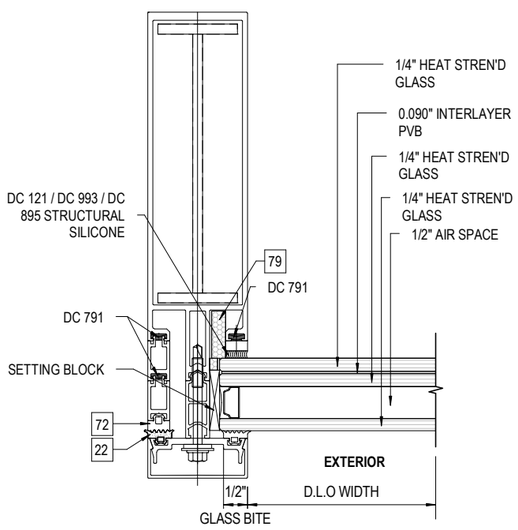

GLASS TYPE "4"

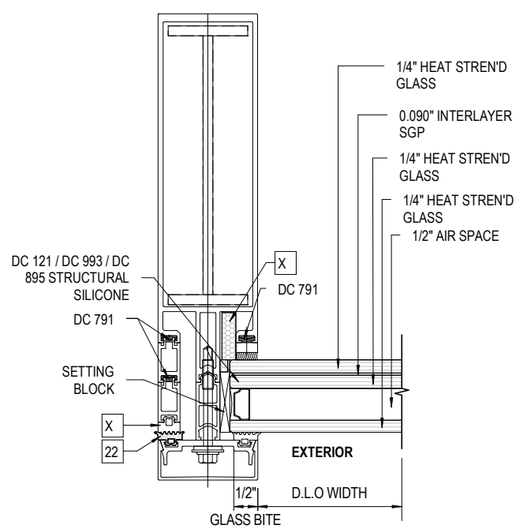

GLASS TYPE "5"

ALLOWABLE DESIGN LOAD CAPACITY - PSF						
D.L.O. WIDTH (IN.)	D.L.O. LENGTH (IN.)	GLASS TYPE				
		GL - 1	GL - 2	GL - 3	GL - 4	GL - 5
21	96	+/- 60	+/- 90	+/- 110	+/- 60	+/- 90
	104	+/- 60	+/- 90	+/- 110	+/- 60	+/- 90
	110	+/- 60	+/- 90	+/- 110	+/- 60	+/- 90
	116	+/- 60	+/- 90	+/- 110	+/- 60	+/- 90
	122	+/- 60	+/- 90	+/- 110	+/- 60	+/- 90
	128	+/- 60	+/- 90	+/- 110	+/- 60	+/- 90
	133	+/- 60	+/- 90	+/- 110	+/- 60	+/- 90
	145-3/4	+/- 60	+/- 90	+/- 110	+/- 60	+/- 90
27	96	+/- 60	+/- 90	+/- 110	+/- 60	+/- 90
	104	+/- 60	+/- 90	+/- 110	+/- 60	+/- 90
	110	+/- 60	+/- 90	+/- 110	+/- 60	+/- 90
	116	+/- 60	+/- 90	+/- 110	+/- 60	+/- 90
	122	+/- 60	+/- 90	+/- 110	+/- 60	+/- 90
	128	+/- 60	+/- 90	+/- 110	+/- 60	+/- 90
	133	+/- 60	+/- 90	+/- 110	+/- 60	+/- 90
	145-3/4	+/- 60	+/- 90	+/- 110	+/- 60	+/- 90
33	96	+/- 60	+/- 90	+/- 110	+/- 60	+/- 90
	104	+/- 60	+/- 90	+/- 110	+/- 60	+/- 90
	110	+/- 60	+/- 90	+/- 110	+/- 60	+/- 90
	116	+/- 60	+/- 90	+/- 110	+/- 60	+/- 90
	122	+/- 60	+/- 90	+/- 110	+/- 60	+/- 90
	128	+/- 60	+/- 90	+/- 110	+/- 60	+/- 90
	133	+/- 60	+/- 90	+/- 110	+/- 60	+/- 90
	145-3/4	+/- 60	+/- 90	+/- 110	+/- 60	+/- 90
39	96	+/- 60	+/- 90	+/- 110	+/- 60	+/- 90
	104	+/- 60	+/- 90	+/- 110	+/- 60	+/- 90
	110	+/- 60	+/- 90	+/- 110	+/- 60	+/- 90
	116	+/- 60	+/- 90	+/- 110	+/- 60	+/- 90
	122	+/- 60	+/- 90	+/- 110	+/- 60	+/- 90
	128	+/- 60	+/- 90	+/- 110	+/- 60	+/- 90
	133	+/- 60	+/- 90	+/- 110	+/- 60	+/- 90
	145-3/4	-	+/- 78	–	+/- 60	+/- 90
45-1/4	96	+/- 60	+/- 90	+/- 110	+/- 60	+/- 90
	104	+/- 60	+/- 90	+/- 110	+/- 60	+/- 90
	110	+/- 60	+/- 90	+/- 110	+/- 60	+/- 90
	116	+/- 60	+/- 90	–	+/- 60	+/- 90
	122	+/- 60	+/- 90	–	+/- 60	+/- 90
	128	–	+/- 83	–	+/- 60	+/- 90
	133	–	+/- 70	–	+/- 60	+/- 90
	145-3/4	–	-	–	+/- 60	+/- 90

NOTE:

- ALL PRESSURES SHOWN ON THIS SHEET ARE ALLOWABLE PRESSURES.

JAVAD AHMAD PE, inc

7875 NW 12 Street, Suite 102
Doral, FL 33126
Ph: (305) 424-8001
support@ja-pe.com

CONSULTING • STRUCTURAL DESIGN • FACADES • BUILDING ENVELOPE • SYSTEM DESIGN • PRODUCT APPROVALS

PROJECT :

MB-SR50N STOREFRONT SYSTEM

CLIENT :

ALUPROF SA

UL.WARSZAWSKA 153, 43-300
BIELSKO-BIALA, POLAND

REVISION

No.	DATE	BY	DESCRIPTION

date:	12-20-2024
scale:	N/A
drawn by:	MK
check by:	BS
Drawing no.	JA-1985-24

Eng: JAVAD AHMAD, PE
CIVIL FLA. PE # 70592 - C.A.N.34254

JAVAD AHMAD LICENSE No 70592 STATE OF FLORIDA PROFESSIONAL ENGINEER

12-20-2024

JAMB AND MULLION PROFILE

FL# 46591

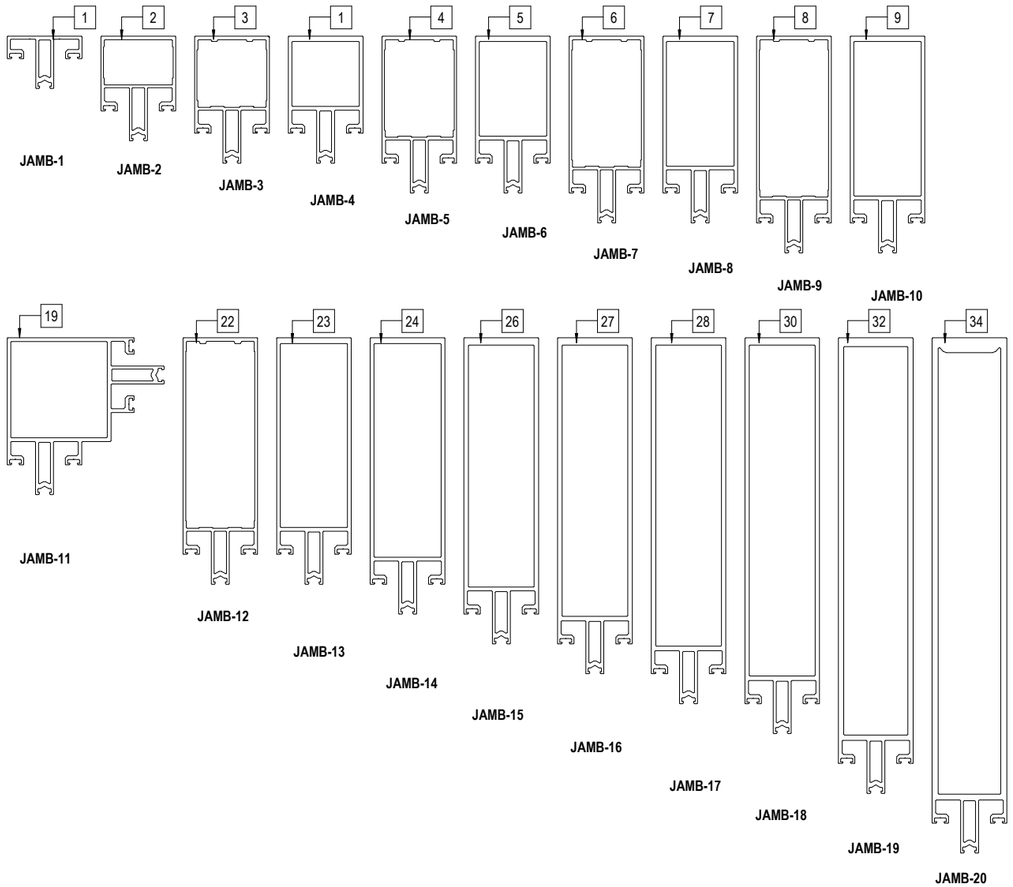

1 / 104 **JAMB PROFILE**

N.T.S.

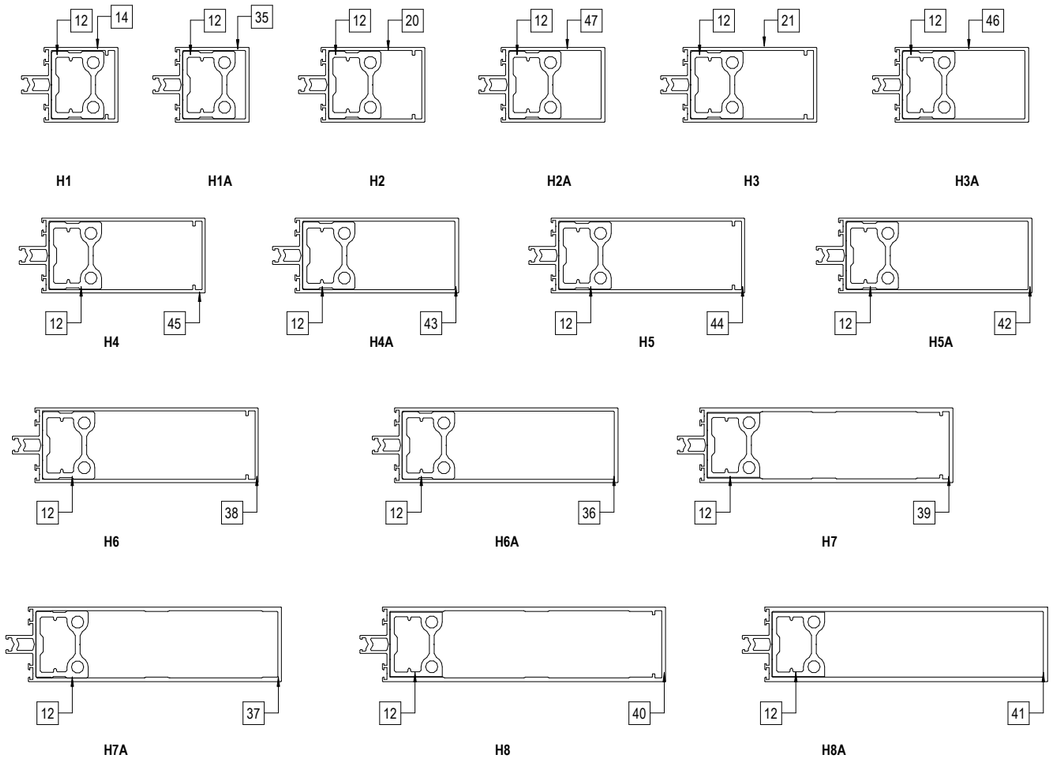

3 / 104 **TRANSOM PROFILE**

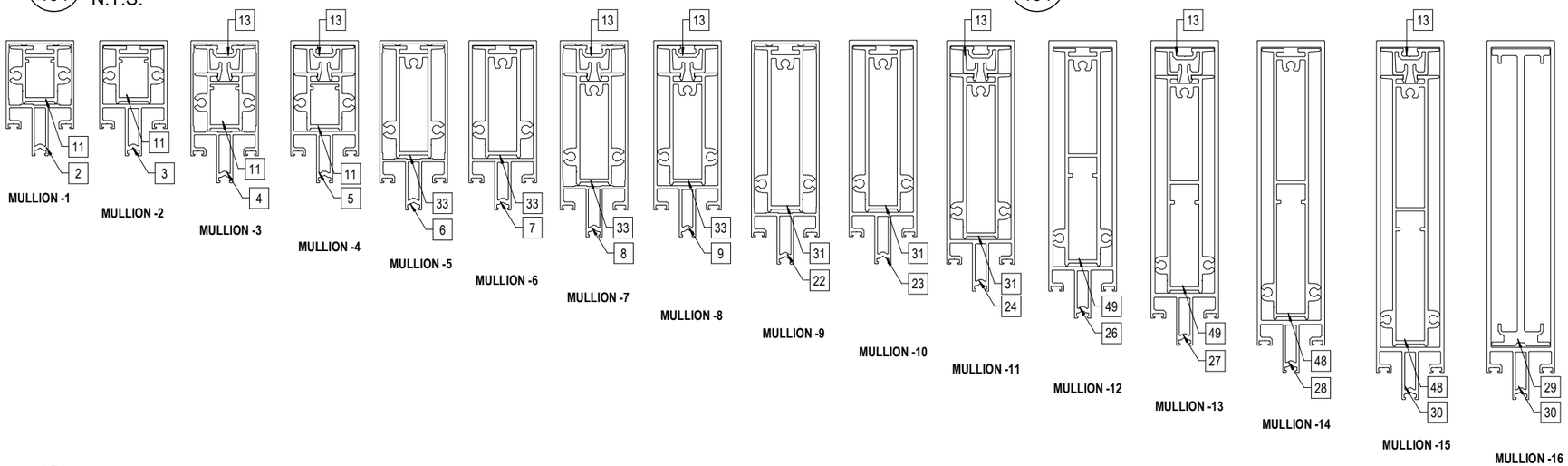

2 / 104 **MULLION PROFILE**

NOTE:

- SEE SHEET 105-107 FOR ALLOWABLE DESIGN PRESSURES

JAVAD AHMAD PE, inc

7875 NW 12 Street, Suite 102
Doral, FL 33126
Ph: (305) 424-8001
support@ja-pe.com

CONSULTING • STRUCTURAL DESIGN • FACADES • BUILDING ENVELOPE • SYSTEM DESIGN • PRODUCT APPROVALS

PROJECT :

MB-SR50N STOREFRONT SYSTEM

CLIENT :

ALUPROF SA

UL.WARSZAWSKA 153, 43-300
BIELSKO-BIALA, POLAND

REVISION

No.	DATE	BY	DESCRIPTION

date:	12-20-2024
scale:	N/A
drawn by:	MK
check by:	BS
Drawing no.	JA-1985-24

Eng: JAVAD AHMAD, PE
CIVIL FLA. PE # 70592 - C.A.N.34254

JAVAD AHMAD LICENSE No 70592 STATE OF FLORIDA PROFESSIONAL ENGINEER

12-20-2024

MULLION LOAD CAPACITY CHART

FL# 46591

ALLOWABLE DESIGN LOAD CAPACITY OF MULLIONS (PSF)										
TRIBUTARY WIDTH (IN.)	JAMB SPAN (IN.)	JAMB "J2"	JAMB "J3"	JAMB "J4"	JAMB "J5"	JAMB "J6"	JAMB "J7"	JAMB "J8"	JAMB "J9"	JAMB "J10"
21	96	+/- 25	+/- 45	+/- 54	+/- 82	+/- 98	+/- 110	+/- 110	+/- 110	+/- 110
	102	+/- 25	+/- 45	+/- 54	+/- 82	+/- 98	+/- 110	+/- 110	+/- 110	+/- 110
	108	+/- 25	+/- 45	+/- 54	+/- 82	+/- 98	+/- 110	+/- 110	+/- 110	+/- 110
	116	+/- 25	+/- 45	+/- 54	+/- 82	+/- 98	+/- 110	+/- 110	+/- 110	+/- 110
	122	+/- 25	+/- 45	+/- 54	+/- 82	+/- 98	+/- 110	+/- 110	+/- 110	+/- 110
	130	+/- 25	+/- 45	+/- 54	+/- 82	+/- 98	+/- 110	+/- 110	+/- 110	+/- 110
	138	+/- 25	+/- 45	+/- 54	+/- 82	+/- 98	+/- 110	+/- 110	+/- 110	+/- 110
	145-3/4	+/- 25	+/- 45	+/- 54	+/- 82	+/- 98	+/- 110	+/- 110	+/- 110	+/- 110
27	96	+/- 25	+/- 45	+/- 54	+/- 82	+/- 98	+/- 110	+/- 110	+/- 110	+/- 110
	102	+/- 25	+/- 45	+/- 54	+/- 82	+/- 98	+/- 110	+/- 110	+/- 110	+/- 110
	108	+/- 25	+/- 45	+/- 54	+/- 82	+/- 98	+/- 110	+/- 110	+/- 110	+/- 110
	116	+/- 25	+/- 45	+/- 54	+/- 82	+/- 98	+/- 110	+/- 110	+/- 110	+/- 110
	122	+/- 25	+/- 45	+/- 54	+/- 82	+/- 98	+/- 110	+/- 110	+/- 110	+/- 110
	130	+/- 25	+/- 45	+/- 54	+/- 82	+/- 98	+/- 110	+/- 110	+/- 110	+/- 110
	138	+/- 25	+/- 45	+/- 54	+/- 82	+/- 98	+/- 110	+/- 110	+/- 110	+/- 110
	145-3/4	+/- 25	+/- 45	+/- 54	+/- 82	+/- 98	+/- 110	+/- 110	+/- 110	+/- 110
33	96	+/- 25	+/- 45	+/- 54	+/- 82	+/- 98	+/- 110	+/- 110	+/- 110	+/- 110
	102	+/- 25	+/- 45	+/- 54	+/- 82	+/- 98	+/- 110	+/- 110	+/- 110	+/- 110
	108	+/- 25	+/- 45	+/- 54	+/- 82	+/- 98	+/- 110	+/- 110	+/- 110	+/- 110
	116	+/- 25	+/- 45	+/- 54	+/- 82	+/- 98	+/- 110	+/- 110	+/- 110	+/- 110
	122	+/- 25	+/- 45	+/- 54	+/- 82	+/- 98	+/- 110	+/- 110	+/- 110	+/- 110
	130	+/- 25	+/- 45	+/- 54	+/- 82	+/- 98	+/- 110	+/- 110	+/- 110	+/- 110
	138	-	-	-	-	-	+/- 110	+/- 110	+/- 110	+/- 110
	145-3/4	-	-	-	-	-	-	+/- 110	+/- 110	+/- 110
39	96	+/- 25	+/- 45	+/- 54	+/- 82	+/- 98	+/- 110	+/- 110	+/- 110	+/- 110
	102	+/- 25	+/- 45	+/- 54	+/- 82	+/- 98	+/- 110	+/- 110	+/- 110	+/- 110
	108	+/- 25	+/- 45	+/- 54	+/- 82	+/- 98	+/- 110	+/- 110	+/- 110	+/- 110
	116	-	-	-	-	-	+/- 110	+/- 110	+/- 110	+/- 110
	122	-	-	-	-	-	-	+/- 110	+/- 110	+/- 110
	130	-	-	-	-	-	-	-	+/- 110	+/- 110
	138	-	-	-	-	-	-	-	-	+/- 110
	145-3/4	-	-	-	-	-	-	-	-	-
45-1/4	96	+/- 25	+/- 45	+/- 54	+/- 82	+/- 98	+/- 110	+/- 110	+/- 110	+/- 110
	102	-	-	-	-	-	+/- 110	+/- 110	+/- 110	+/- 110
	108	-	-	-	-	-	-	+/- 110	+/- 110	+/- 110
	116	-	-	-	-	-	-	-	+/- 110	+/- 110
	122	-	-	-	-	-	-	-	-	+/- 110
	130	-	-	-	-	-	-	-	-	-
	138	-	-	-	-	-	-	-	-	-
	145-3/4	-	-	-	-	-	-	-	-	-

JAVAD AHMAD PE, inc

7875 NW 12 Street, Suite 102
Doral, FL 33126
Ph: (305) 424-8001
support@ja-pe.com

CONSULTING • STRUCTURAL DESIGN • FACADES • BUILDING ENVELOPE • SYSTEM DESIGN • PRODUCT APPROVALS

PROJECT :

MB-SR50N STOREFRONT SYSTEM

CLIENT :

ALUPROF SA

UL.WARSZAWSKA 153, 43-300
BIELSKO-BIALA, POLAND

REVISION

No.	DATE	BY	DESCRIPTION

date:	12-20-2024
scale:	N/A
drawn by:	MK
check by:	BS
Drawing no.	JA-1985-24

Eng: JAVAD AHMAD, PE
CIVIL FLA. PE # 70592 - C.A.N.34254

JAVAD AHMAD LICENSE No 70592 STATE OF FLORIDA PROFESSIONAL ENGINEER

12-20-2024

MULLION LOAD CAPACITY CHART

FL# 46591

ALLOWABLE DESIGN LOAD CAPACITY OF MULLIONS (PSF)											
TRIBUTARY WIDTH (IN.)	JAMB SPAN (IN.)	JAMB "J11"	JAMB "J12"	JAMB "J13"	JAMB "J14"	JAMB "J15"	JAMB "J16"	JAMB "J17"	JAMB "J18"	JAMB "J19"	JAMB "J20"
21	96	+/- 110	+/- 110	+/- 110	+/- 110	+/- 110	+/- 110	+/- 110	+/- 110	+/- 110	+/- 110
	102	+/- 110	+/- 110	+/- 110	+/- 110	+/- 110	+/- 110	+/- 110	+/- 110	+/- 110	+/- 110
	108	+/- 110	+/- 110	+/- 110	+/- 110	+/- 110	+/- 110	+/- 110	+/- 110	+/- 110	+/- 110
	116	+/- 110	+/- 110	+/- 110	+/- 110	+/- 110	+/- 110	+/- 110	+/- 110	+/- 110	+/- 110
	122	+/- 110	+/- 110	+/- 110	+/- 110	+/- 110	+/- 110	+/- 110	+/- 110	+/- 110	+/- 110
	130	+/- 110	+/- 110	+/- 110	+/- 110	+/- 110	+/- 110	+/- 110	+/- 110	+/- 110	+/- 110
	138	+/- 110	+/- 110	+/- 110	+/- 110	+/- 110	+/- 110	+/- 110	+/- 110	+/- 110	+/- 110
	145-3/4	+/- 110	+/- 110	+/- 110	+/- 110	+/- 110	+/- 110	+/- 110	+/- 110	+/- 110	+/- 110
27	96	+/- 110	+/- 110	+/- 110	+/- 110	+/- 110	+/- 110	+/- 110	+/- 110	+/- 110	+/- 110
	102	+/- 110	+/- 110	+/- 110	+/- 110	+/- 110	+/- 110	+/- 110	+/- 110	+/- 110	+/- 110
	108	+/- 110	+/- 110	+/- 110	+/- 110	+/- 110	+/- 110	+/- 110	+/- 110	+/- 110	+/- 110
	116	+/- 110	+/- 110	+/- 110	+/- 110	+/- 110	+/- 110	+/- 110	+/- 110	+/- 110	+/- 110
	122	+/- 110	+/- 110	+/- 110	+/- 110	+/- 110	+/- 110	+/- 110	+/- 110	+/- 110	+/- 110
	130	+/- 110	+/- 110	+/- 110	+/- 110	+/- 110	+/- 110	+/- 110	+/- 110	+/- 110	+/- 110
	138	+/- 110	+/- 110	+/- 110	+/- 110	+/- 110	+/- 110	+/- 110	+/- 110	+/- 110	+/- 110
	145-3/4	+/- 110	+/- 110	+/- 110	+/- 110	+/- 110	+/- 110	+/- 110	+/- 110	+/- 110	+/- 110
33	96	+/- 110	+/- 110	+/- 110	+/- 110	+/- 110	+/- 110	+/- 110	+/- 110	+/- 110	+/- 110
	102	+/- 110	+/- 110	+/- 110	+/- 110	+/- 110	+/- 110	+/- 110	+/- 110	+/- 110	+/- 110
	108	+/- 110	+/- 110	+/- 110	+/- 110	+/- 110	+/- 110	+/- 110	+/- 110	+/- 110	+/- 110
	116	+/- 110	+/- 110	+/- 110	+/- 110	+/- 110	+/- 110	+/- 110	+/- 110	+/- 110	+/- 110
	122	+/- 110	+/- 110	+/- 110	+/- 110	+/- 110	+/- 110	+/- 110	+/- 110	+/- 110	+/- 110
	130	+/- 110	+/- 110	+/- 110	+/- 110	+/- 110	+/- 110	+/- 110	+/- 110	+/- 110	+/- 110
	138	-	+/- 110	+/- 110	+/- 110	+/- 110	+/- 110	+/- 110	+/- 110	+/- 110	+/- 110
	145-3/4	-	+/- 110	+/- 110	+/- 110	+/- 110	+/- 110	+/- 110	+/- 110	+/- 110	+/- 110
39	96	+/- 110	+/- 110	+/- 110	+/- 110	+/- 110	+/- 110	+/- 110	+/- 110	+/- 110	+/- 110
	102	+/- 110	+/- 110	+/- 110	+/- 110	+/- 110	+/- 110	+/- 110	+/- 110	+/- 110	+/- 110
	108	+/- 110	+/- 110	+/- 110	+/- 110	+/- 110	+/- 110	+/- 110	+/- 110	+/- 110	+/- 110
	116	+/- 110	+/- 110	+/- 110	+/- 110	+/- 110	+/- 110	+/- 110	+/- 110	+/- 110	+/- 110
	122	-	+/- 110	+/- 110	+/- 110	+/- 110	+/- 110	+/- 110	+/- 110	+/- 110	+/- 110
	130	-	+/- 110	+/- 110	+/- 110	+/- 110	+/- 110	+/- 110	+/- 110	+/- 110	+/- 110
	138	-	+/- 110	+/- 110	+/- 110	+/- 110	+/- 110	+/- 110	+/- 110	+/- 110	+/- 110
	145-3/4	-	+/- 110	+/- 110	+/- 110	+/- 110	+/- 110	+/- 110	+/- 110	+/- 110	+/- 110
45-1/4	96	+/- 110	+/- 110	+/- 110	+/- 110	+/- 110	+/- 110	+/- 110	+/- 110	+/- 110	+/- 110
	102	-	+/- 110	+/- 110	+/- 110	+/- 110	+/- 110	+/- 110	+/- 110	+/- 110	+/- 110
	108	-	+/- 110	+/- 110	+/- 110	+/- 110	+/- 110	+/- 110	+/- 110	+/- 110	+/- 110
	116	-	+/- 110	+/- 110	+/- 110	+/- 110	+/- 110	+/- 110	+/- 110	+/- 110	+/- 110
	122	-	+/- 110	+/- 110	+/- 110	+/- 110	+/- 110	+/- 110	+/- 110	+/- 110	+/- 110
	130	-	+/- 110	+/- 110	+/- 110	+/- 110	+/- 110	+/- 110	+/- 110	+/- 110	+/- 110
	138	-	-	+/- 110	+/- 110	+/- 110	+/- 110	+/- 110	+/- 110	+/- 110	+/- 110
	145-3/4	-	-	-	+/- 110	+/- 110	+/- 110	+/- 110	+/- 110	+/- 110	+/- 110

JAVAD AHMAD PE, inc

7875 NW 12 Street, Suite 102
Doral, FL 33126
Ph: (305) 424-8001
support@ja-pe.com

CONSULTING • STRUCTURAL DESIGN • FACADES • BUILDING ENVELOPE • SYSTEM DESIGN • PRODUCT APPROVALS

PROJECT :

MB-SR50N STOREFRONT SYSTEM

CLIENT :

ALUPROF SA

UL.WARSZAWSKA 153, 43-300
BIELSKO-BIALA, POLAND

REVISION

No.	DATE	BY	DESCRIPTION

date:	12-20-2024
scale:	N/A
drawn by:	MK
check by:	BS
Drawing no.	JA-1985-24

Eng: JAVAD AHMAD, PE
CIVIL FLA. PE # 70592 - C.A.N.34254

JAVAD AHMAD LICENSE No 70592 STATE OF FLORIDA PROFESSIONAL ENGINEER

12-20-2024

TRANSOM LOAD CAPACITY CHART

FL# 46591

ALLOWABLE DESIGN LOAD CAPACITY OF HORIZONTAL MULLIONS (PSF)									
TRIBUTARY WIDTH (IN.)	MULLION SPAN (IN.)	MULLION "H1 & H1A"	MULLION "H2 & H12A"	MULLION "H3 & H3A"	MULLION "H4 & H4A"	MULLION "H5 & H5A"	MULLION "H6 & H6A"	MULLION "H7 & H7A"	MULLION "H8 & H8A"
21	38	+/- 110	+/- 110	+/- 110	+/- 110	+/- 110	+/- 110	+/- 110	+/- 110
	52	+/- 110	+/- 110	+/- 110	+/- 110	+/- 110	+/- 110	+/- 110	+/- 110
	66	+/- 110	+/- 110	+/- 110	+/- 110	+/- 110	+/- 110	+/- 110	+/- 110
	80	+/- 110	+/- 110	+/- 110	+/- 110	+/- 110	+/- 110	+/- 110	+/- 110
	94	+/- 110	+/- 110	+/- 110	+/- 110	+/- 110	+/- 110	+/- 110	+/- 110
	110	+/- 110	+/- 110	+/- 110	+/- 110	+/- 110	+/- 110	+/- 110	+/- 110
	122	+/- 110	+/- 110	+/- 110	+/- 110	+/- 110	+/- 110	+/- 110	+/- 110
	134	-	+/- 110	+/- 110	+/- 110	+/- 110	+/- 110	+/- 110	+/- 110
	145-3/4	-	+/- 110	+/- 110	+/- 110	+/- 110	+/- 110	+/- 110	+/- 110
27	38	+/- 110	+/- 110	+/- 110	+/- 110	+/- 110	+/- 110	+/- 110	+/- 110
	52	+/- 110	+/- 110	+/- 110	+/- 110	+/- 110	+/- 110	+/- 110	+/- 110
	66	+/- 110	+/- 110	+/- 110	+/- 110	+/- 110	+/- 110	+/- 110	+/- 110
	80	+/- 110	+/- 110	+/- 110	+/- 110	+/- 110	+/- 110	+/- 110	+/- 110
	94	+/- 110	+/- 110	+/- 110	+/- 110	+/- 110	+/- 110	+/- 110	+/- 110
	110	-	+/- 110	+/- 110	+/- 110	+/- 110	+/- 110	+/- 110	+/- 110
	122	-	-	+/- 110	+/- 110	+/- 110	+/- 110	+/- 110	+/- 110
	134	-	-	-	-	+/- 110	+/- 110	+/- 110	+/- 110
	145-3/4	-	-	-	-	-	-	+/- 110	+/- 110
33	38	+/- 110	+/- 110	+/- 110	+/- 110	+/- 110	+/- 110	+/- 110	+/- 110
	52	+/- 110	+/- 110	+/- 110	+/- 110	+/- 110	+/- 110	+/- 110	+/- 110
	66	+/- 110	+/- 110	+/- 110	+/- 110	+/- 110	+/- 110	+/- 110	+/- 110
	80	-	+/- 110	+/- 110	+/- 110	+/- 110	+/- 110	+/- 110	+/- 110
	94	-	+/- 110	+/- 110	+/- 110	+/- 110	+/- 110	+/- 110	+/- 110
	110	-	-	-	-	+/- 110	+/- 110	+/- 110	+/- 110
	122	-	-	-	-	-	-	+/- 110	+/- 110
	134	-	-	-	-	-	-	-	+/- 110
	145-3/4	-	-	-	-	-	-	-	-
39	38	+/- 110	+/- 110	+/- 110	+/- 110	+/- 110	+/- 110	+/- 110	+/- 110
	52	+/- 110	+/- 110	+/- 110	+/- 110	+/- 110	+/- 110	+/- 110	+/- 110
	66	+/- 110	+/- 110	+/- 110	+/- 110	+/- 110	+/- 110	+/- 110	+/- 110
	80	-	+/- 110	+/- 110	+/- 110	+/- 110	+/- 110	+/- 110	+/- 110
	94	-	-	-	-	+/- 110	+/- 110	+/- 110	+/- 110
	110	-	-	-	-	-	-	+/- 110	+/- 110
	122	-	-	-	-	-	-	-	-
	134	-	-	-	-	-	-	-	-
	145-3/4	-	-	-	-	-	-	-	-
45-1/4	38	+/- 110	+/- 110	+/- 110	+/- 110	+/- 110	+/- 110	+/- 110	+/- 110
	52	+/- 110	+/- 110	+/- 110	+/- 110	+/- 110	+/- 110	+/- 110	+/- 110
	66	-	+/- 110	+/- 110	+/- 110	+/- 110	+/- 110	+/- 110	+/- 110
	80	-	-	-	-	+/- 110	+/- 110	+/- 110	+/- 110
	94	-	-	-	-	-	-	+/- 110	+/- 110
	110	-	-	-	-	-	-	-	-
	122	-	-	-	-	-	-	-	-
	134	-	-	-	-	-	-	-	-
	145-3/4	-	-	-	-	-	-	-	-

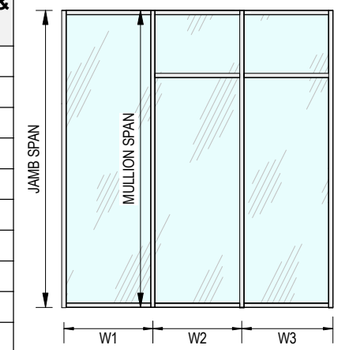

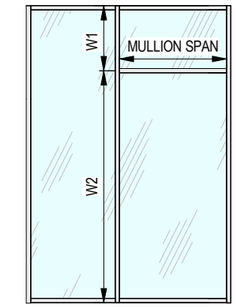

VERTICAL MULLION TRUBUTARY CALCULATION

AT FRAME JAMB
TRIBUTARY WIDTH (W) = $\frac{W1}{2}$

AT INTERMEDIATE
TRIBUTARY WIDTH (W) = $\frac{W1+W2}{2}$

HORIZONTAL MULLION TRUBUTARY CALCULATION

TRIBUTARY WIDTH (W) = $\frac{W1 + W2}{2}$

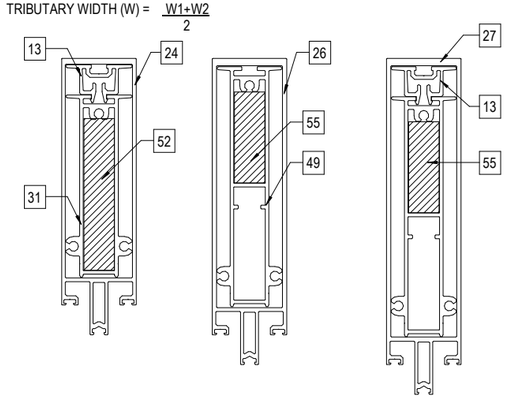

MULLIONS WITH REINFORCEMENT

* CORNER MULLION -
MAXIMUM PRESSURE IS +/-70 PSF

NOTE:

- REINFORCED MULLIONS TO BE USED AS JAMB WHERE SYSTEM UNDER SEPARATE FBC APPROVAL IS USED. THE LOWER DESIGN PRESSURE FROM EACH PRODUCT WILL APPLY TO THE ENTIRE SYSTEM.
- ALL PRESSURES SHOWN ON THIS SHEET ARE ALLOWABLE LOADS.
- ALL REINFORCEMENTS SHALL BE FULL LENGTH UPTO THE BRACKET'S EDGE.

JAVAD AHMAD PE, inc
7875 NW 12 Street, Suite 102
Doral, FL 33126
Ph: (305) 424-8001
support@ja-pe.com
CONSULTING • STRUCTURAL DESIGN • FACADES • BUILDING ENVELOPE • SYSTEM DESIGN • PRODUCT APPROVALS

PROJECT :

MB-SR50N STOREFRONT SYSTEM

CLIENT :

ALUPROF SA

UL.WARSZAWSKA 153, 43-300
BIELSKO-BIALA, POLAND

REVISION

No.	DATE	BY	DESCRIPTION

date:	12-20-2024
scale:	N/A
drawn by:	MK
check by:	BS
Drawing no.	JA-1985-24

Eng: JAVAD AHMAD, PE
CIVIL FLA. PE # 70592 - C.A.N.34254

JAVAD AHMAD LICENSE No 70592 STATE OF FLORIDA PROFESSIONAL ENGINEER

12-20-2024

SECTIONAL DETAILS

FL# 46591

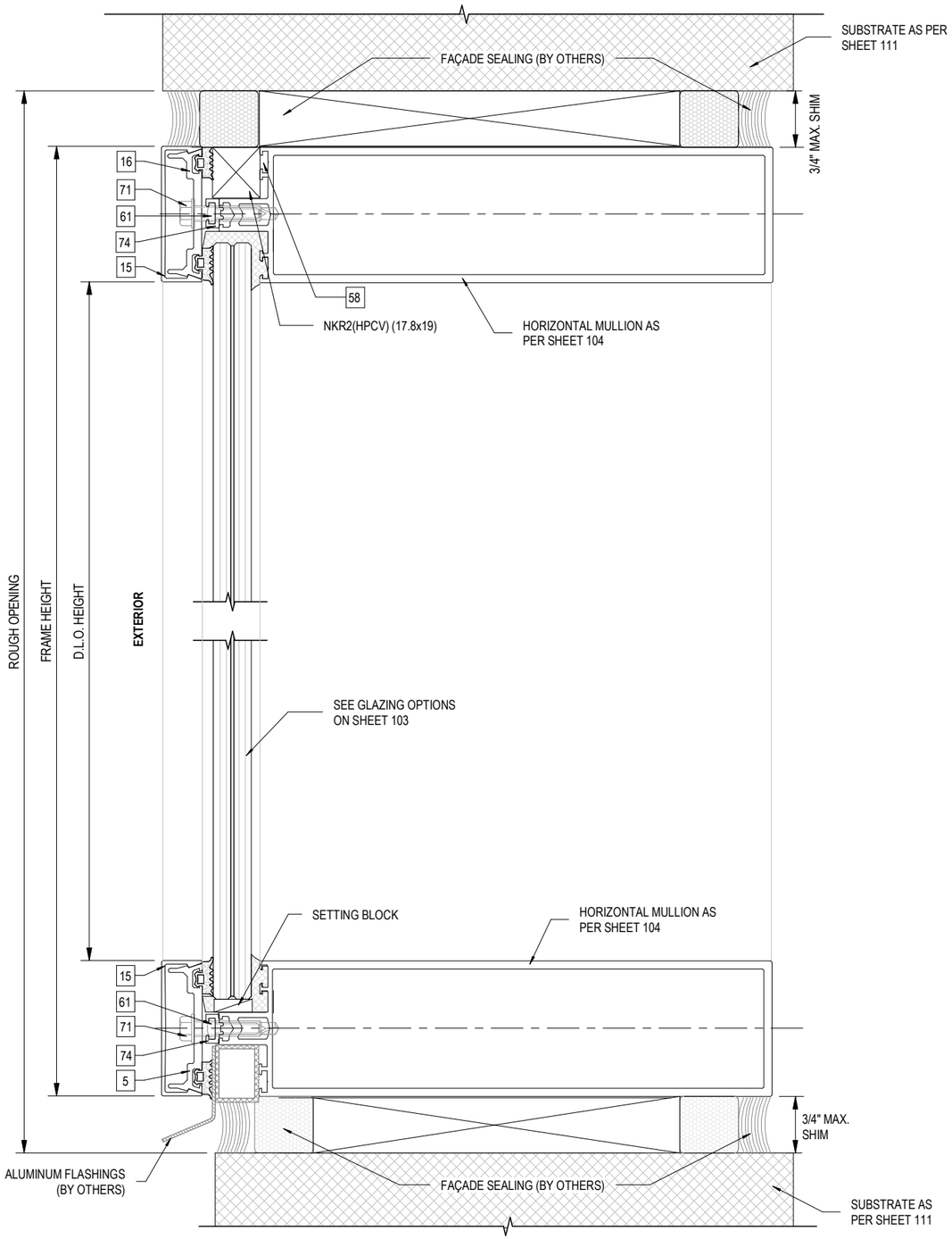

1 / 108 **HEAD AND SILL DETAIL**
N.T.S.

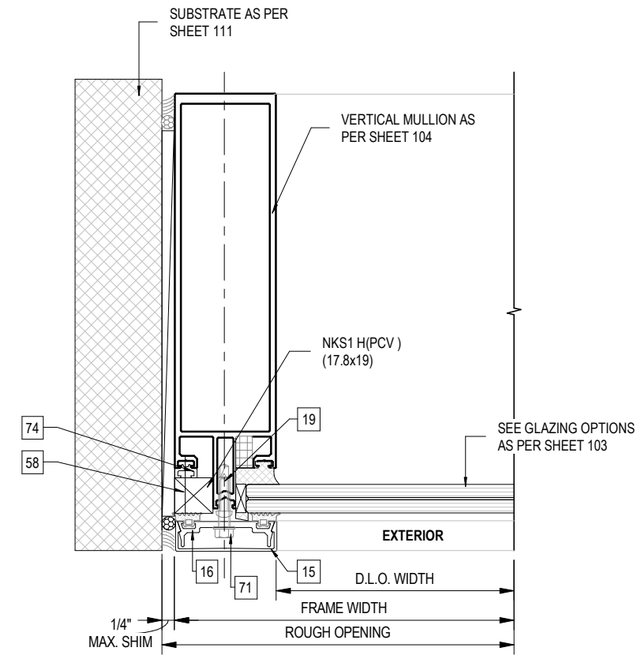

2 / 108 **JAMB DETAIL 1**
N.T.S.

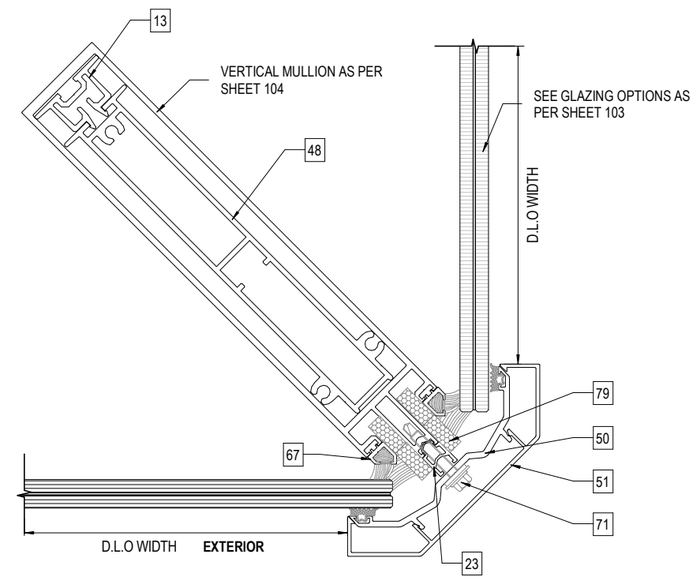

NOTE:
PLEASE SEE SHEET 119 FOR CORNER ANCHORAGE DETAILS

3 / 108 **INTERMEDIATE EXTERNAL CORNER DETAIL**
N.T.S.

JAVAD AHMAD PE, inc
7875 NW 12 Street, Suite 102
Doral, FL 33126
Ph: (305) 424-8001
support@ja-pe.com
CONSULTING • STRUCTURAL DESIGN • FACADES • BUILDING ENVELOPE • SYSTEM DESIGN • PRODUCT APPROVALS

PROJECT :
MB-SR50N STOREFRONT SYSTEM

CLIENT :
ALUPROF SA

UL.WARSZAWSKA 153, 43-300
BIELSKO-BIALA, POLAND

REVISION

No.	DATE	BY	DESCRIPTION

date:	12-20-2024
scale:	N/A
drawn by:	MK
check by:	BS
Drawing no.	JA-1985-24

Eng: JAVAD AHMAD, PE
CIVIL FLA. PE # 70592 - C.A.N.34254

JAVAD AHMAD LICENSE No 70592 STATE OF FLORIDA PROFESSIONAL ENGINEER

12-20-2024

SECTIONAL DETAILS

FL# 46591

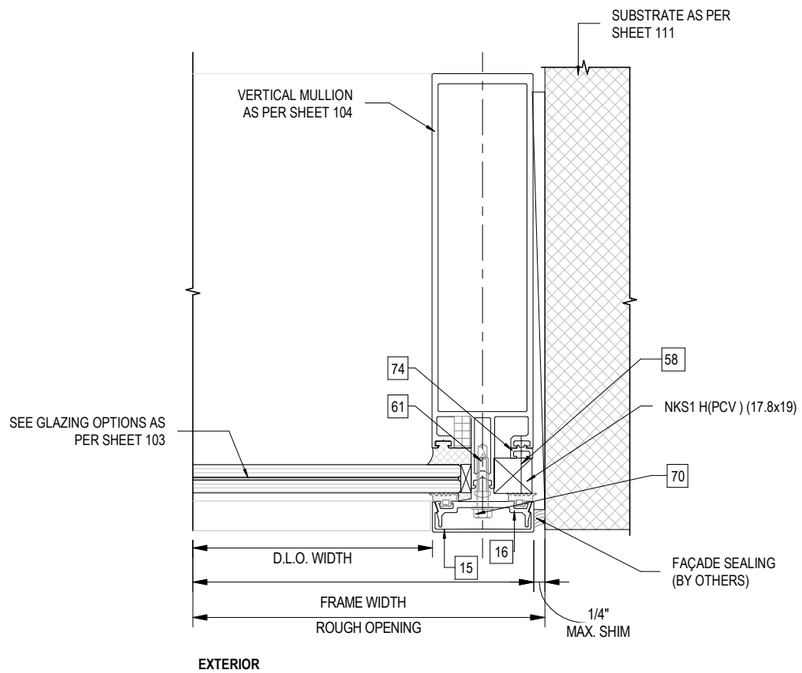

1/109 **JAMB DETAIL 2**
N.T.S.

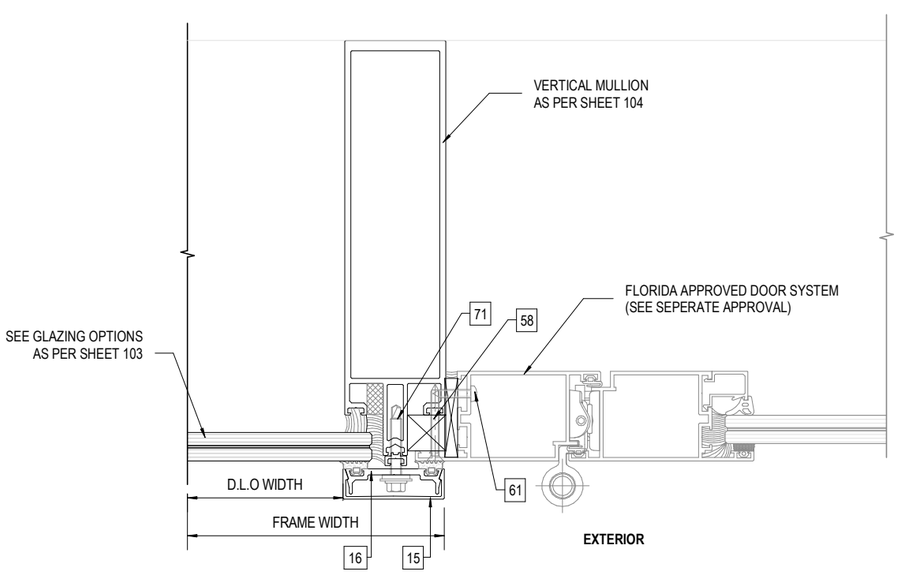

2/109 **TYPICAL FRENCH DOOR ANCHORED INTO INTERMEDIATE MULLION**
N.T.S.

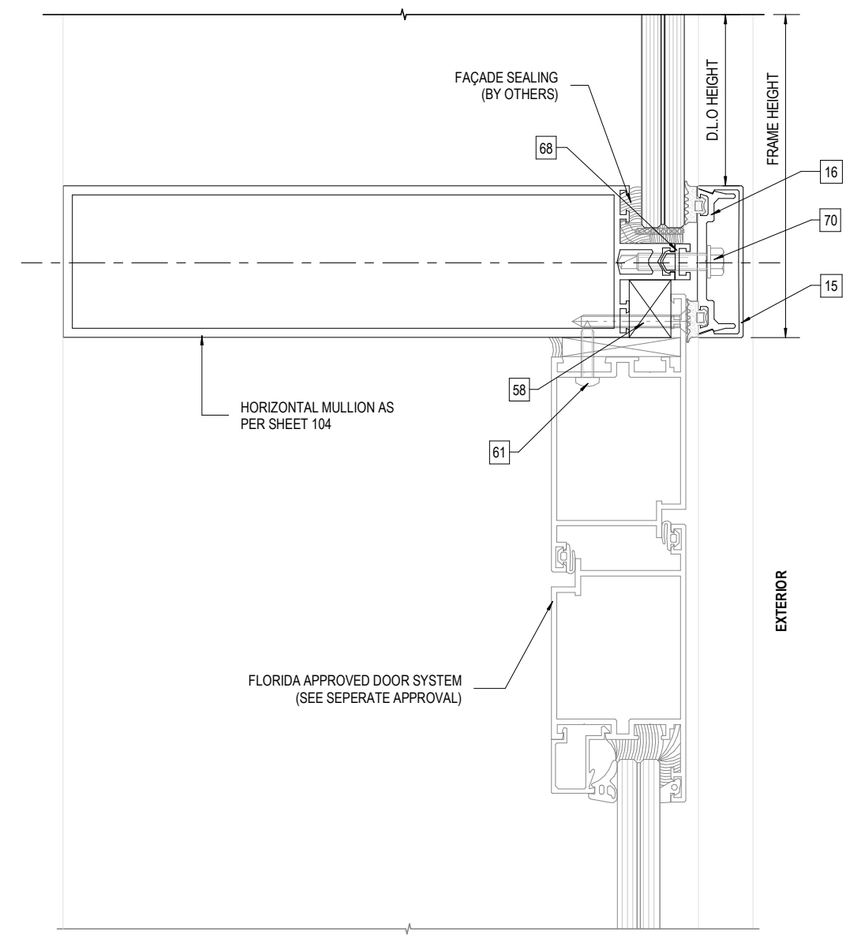

3/109 **TRANSOM OVER FRENCH DOOR**
N.T.S.

JAVAD AHMAD PE, inc
7875 NW 12 Street, Suite 102
Doral, FL 33126
Ph: (305) 424-8001
support@ja-pe.com
CONSULTING • STRUCTURAL DESIGN • FACADES • BUILDING ENVELOPE • SYSTEM DESIGN • PRODUCT APPROVALS

PROJECT :

MB-SR50N STOREFRONT SYSTEM

CLIENT :

ALUPROF SA

UL.WARSZAWSKA 153, 43-300 BIELSKO-BIALA, POLAND

REVISION

No.	DATE	BY	DESCRIPTION

date:	12-20-2024
scale:	N/A
drawn by:	MK
check by:	BS
Drawing no.	JA-1985-24

Eng: JAVAD AHMAD, PE
CIVIL FLA. PE # 70592 - C.A.N.34254

JAVAD AHMAD LICENSE No 70592 STATE OF FLORIDA PROFESSIONAL ENGINEER

12-20-2024

SECTIONAL DETAILS

FL# 46591

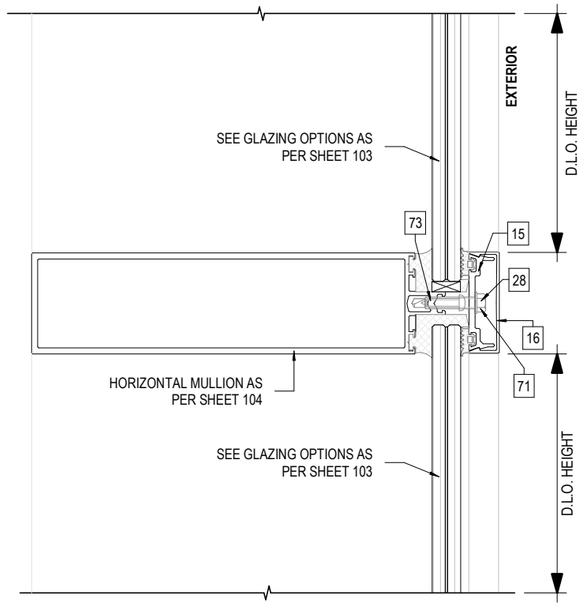

1/110 **TRANSOM DETAIL**
N.T.S.

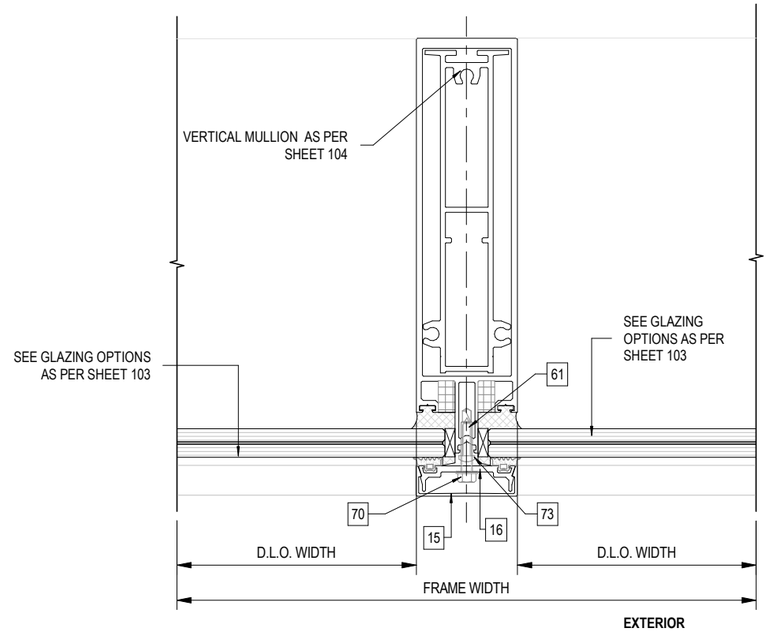

2/110 **INTERMEDIATE MULLION DETAIL**
N.T.S.

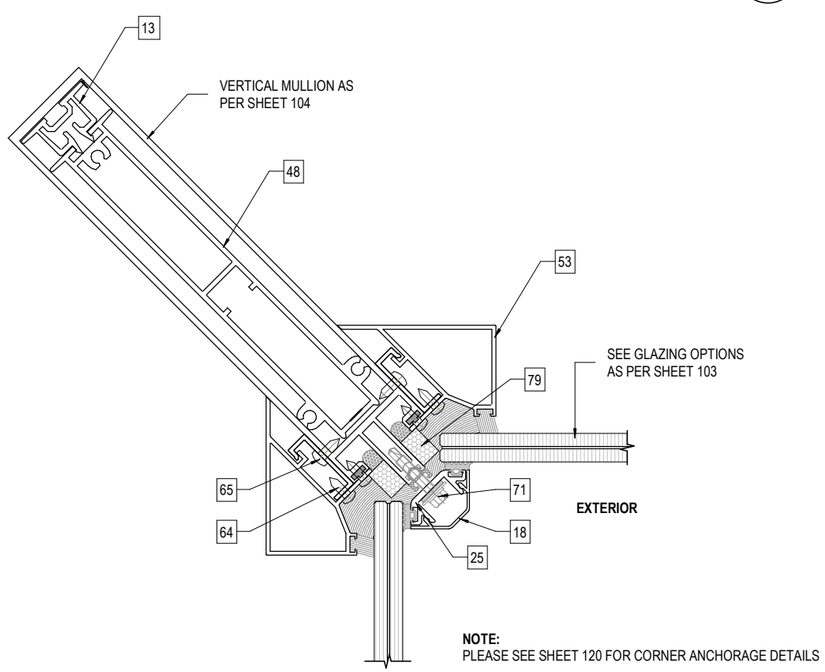

NOTE:
PLEASE SEE SHEET 120 FOR CORNER ANCHORAGE DETAILS

3/110 **INTERMEDIATE INTERNAL CORNER MULLION**
N.T.S.

JAVAD AHMAD PE, inc
7875 NW 12 Street, Suite 102
Doral, FL 33126
Ph: (305) 424-8001
support@ja-pe.com
CONSULTING • STRUCTURAL DESIGN • FACADES • BUILDING ENVELOPE • SYSTEM DESIGN • PRODUCT APPROVALS

PROJECT :
MB-SR50N STOREFRONT SYSTEM

CLIENT :
ALUPROF SA

UL.WARSZAWSKA 153, 43-300
BIELSKO-BIALA, POLAND

REVISION

No.	DATE	BY	DESCRIPTION

date:	12-20-2024
scale:	N/A
drawn by:	MK
check by:	BS
Drawing no.	JA-1985-24

Eng: JAVAD AHMAD, PE
CIVIL FLA. PE # 70592 - C.A.N.34254

JAVAD AHMAD LICENSE No 70592 STATE OF FLORIDA PROFESSIONAL ENGINEER

12-20-2024

ANCHORAGE DETAILS

FL# 46591

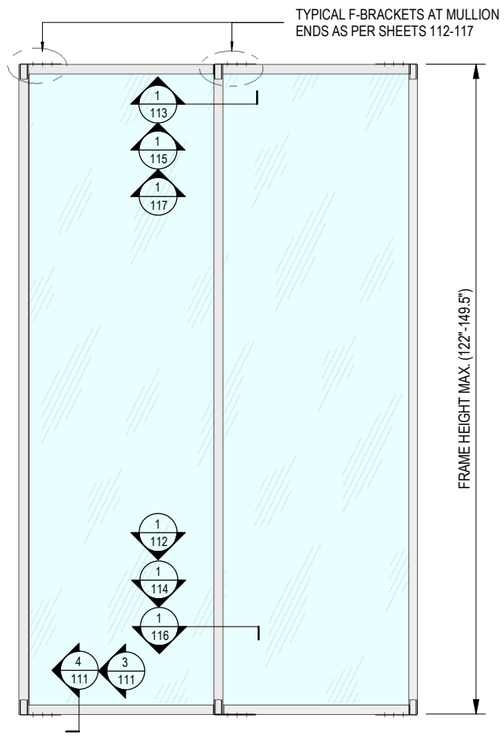

1/111 **ANCHORAGE LAYOUT-1**
N.T.S.

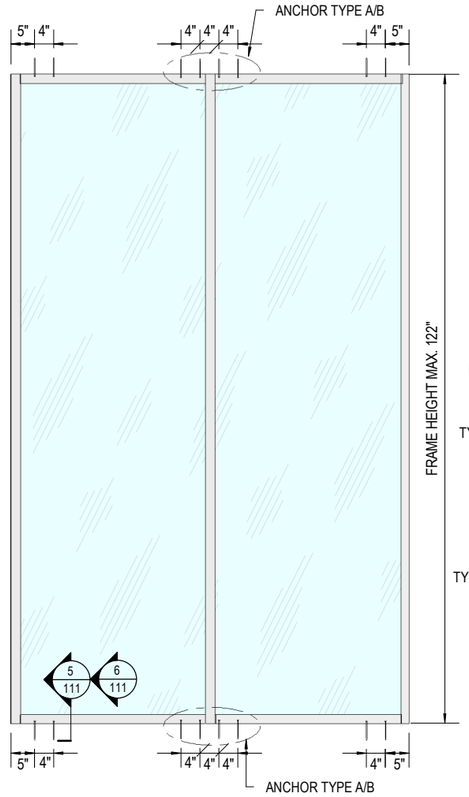

2/111 **ANCHORAGE LAYOUT-2**
N.T.S.

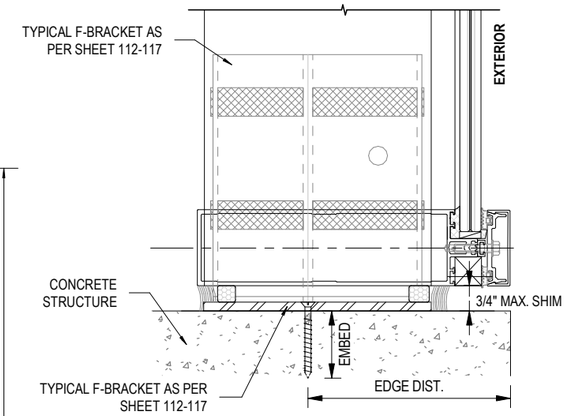

3/111 **ANCHORAGE INTO CONCRETE 1**
N.T.S.

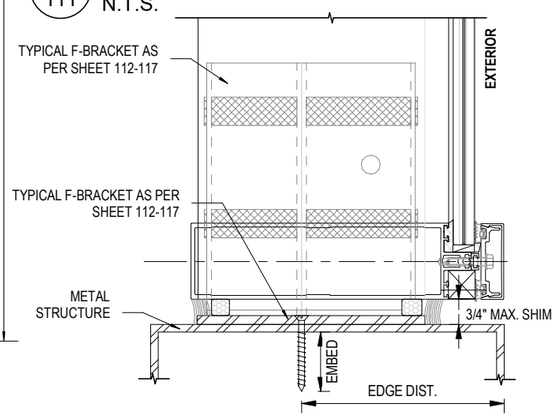

4/111 **ANCHORAGE INTO METAL 1**
N.T.S.

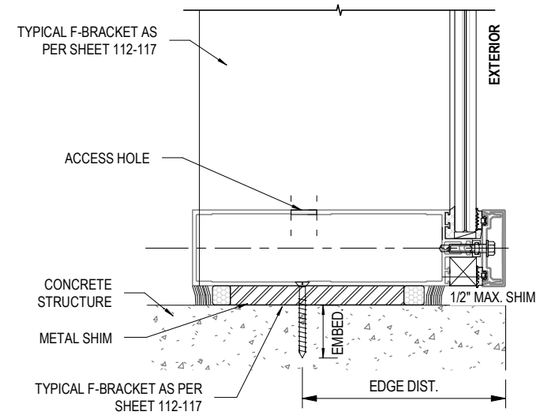

5/111 **ANCHORAGE INTO CONCRETE 2**
N.T.S.

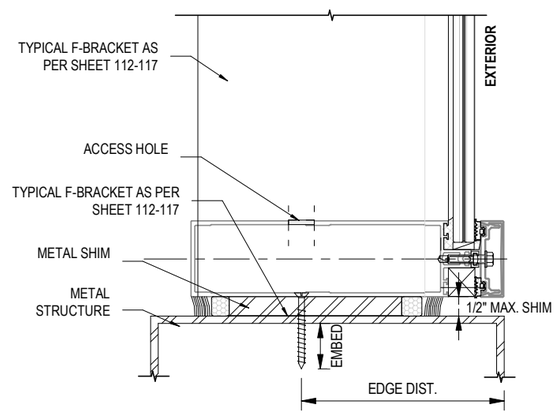

6/111 **ANCHORAGE INTO METAL 2**
N.T.S.

SUBSTRATE	TYPE	ANCHOR TYPE
CONCRETE	A	3/8" X 2-1/2" DEWALT SCREW-BOLT+ FH ANCHORS WITH MIN. 2" NOMINAL EMBEDMENT, 4" MIN. EDGE DISTANCE INTO MIN. 3000 PSI CONCRETE.
METAL STRUCTURE	B	1/4-20 SS" SCREW (GR. 5) W/ MIN. 3 THREAD PENETRATION BEYOND METAL THICKNESS INTO METAL STRUCTURE (STEEL 1/4" MIN. THK.) WITH 1" MIN. EDGE DISTANCE AND 4" MIN. SPACING.

ANCHOR / SUBSTRATE NOTES:

- CONCRETE AT HEAD, SILL OR JAMBS SHALL BE MIN. 3000 PSI
- STEEL AT HEAD, SILL OR JAMBS SHALL BE MIN. A36 GRADE, 1/8" THICK
- ALUMINUM AT HEAD SHALL BE MIN. 6063 T6, 1/8" THICK

NOTE:
THE SUPPORTING STRUCTURE SHALL BE DESIGED BY THE EOR FOR THE LOADS IMPOSED BY THIS SYSTEM. THIS APPROVAL DOES NOT COVER THE DESIGN OF SUBSTRATE.

JAVAD AHMAD PE, inc
7875 NW 12 Street, Suite 102
Doral, FL 33126
Ph: (305) 424-8001
support@ja-pe.com
CONSULTING • STRUCTURAL DESIGN • FACADES • BUILDING ENVELOPE • SYSTEM DESIGN • PRODUCT APPROVALS

PROJECT :
MB-SR50N STOREFRONT SYSTEM

CLIENT :
ALUPROF SA

UL.WARSZAWSKA 153, 43-300
BIELSKO-BIALA, POLAND

REVISION

No.	DATE	BY	DESCRIPTION

date:	12-20-2024
scale:	N/A
drawn by:	MK
check by:	BS
Drawing no.	JA-1985-24

Eng: JAVAD AHMAD, PE
CIVIL FLA. PE # 70592 - C.A.N.34254

JAVAD AHMAD LICENSE No 70592 STATE OF FLORIDA PROFESSIONAL ENGINEER

12-20-2024

F-BRACKET DETAIL

FL# 46591

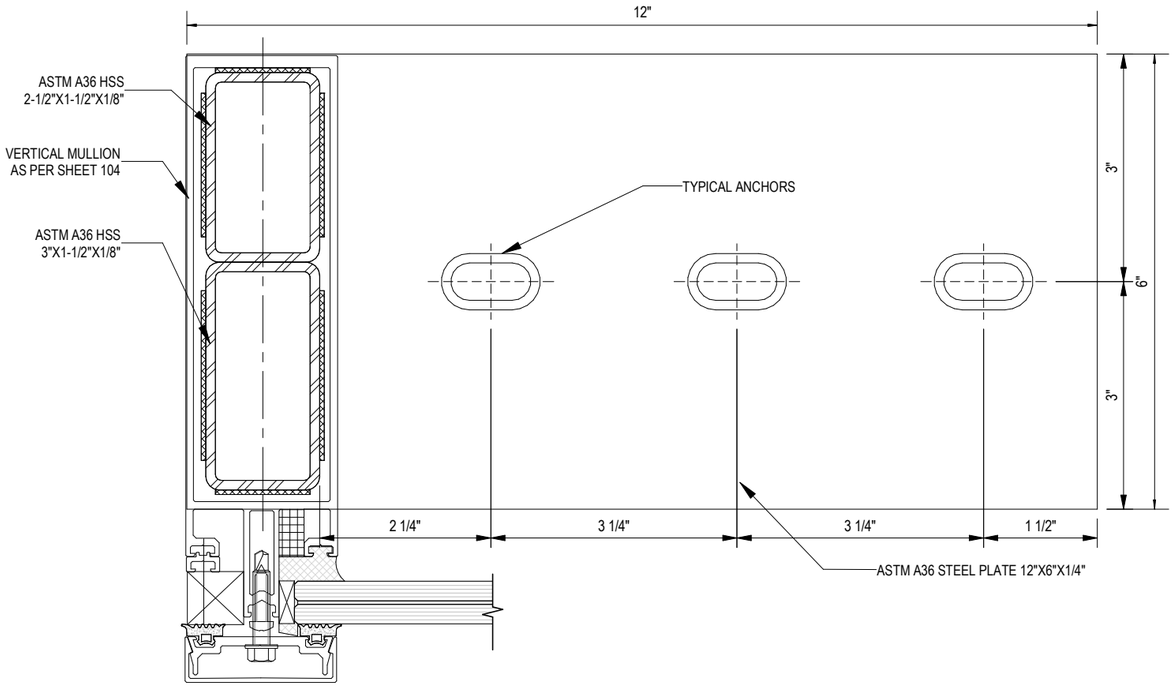

PLAN VIEW

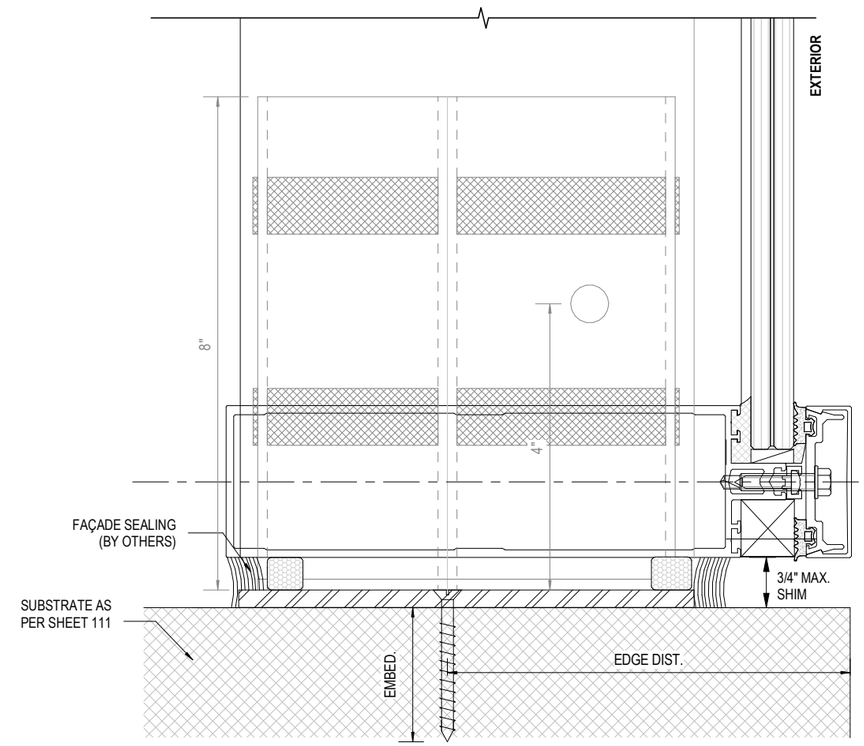

SIDE VIEW

1/112 **F-BRACKET FOR K431526X MULLION AT SILL**
N.T.S.

MATERIAL: ASTM A36 STEEL
ALLOWABLE DESIGN PRESSURE: +/-64 PSF

NOTE:
- FOR ANCHORS BEING EMBEDDED INTO P.T. SLAB, THE CONTRACTOR SHALL BE RESPONSIBLE FOR TAKING ALL THE SAFETY PRECAUTIONS TO AVOID DAMAGING TO THE EXISTING P.T. TENDONS.
- PROVIDE PVC PADDING, FOR THE MULLION TO BE SNUG FIT WITH THE BRACKETS.

SUBSTRATE	GRADE	ANCHOR TYPE
CONCRETE	3000 PSI	3/8" X 4" HILTI KH-EZ C ANCHORS WITH MIN. 3-1/4" NOMINAL EMBEDMENT, 4" MIN. EDGE DISTANCE INTO MIN. 3000 PSI CONCRETE.
		3/8" X 2-1/2" DEWALT SCREW-BOLT+ FH ANCHORS WITH MIN. 2" NOMINAL EMBEDMENT, 4" MIN. EDGE DISTANCE INTO MIN. 3000 PSI CONCRETE.
CONCRETE	6000 PSI	3/8" X 4" HILTI KH-EZ C ANCHORS WITH MIN. 3-1/4" NOMINAL EMBEDMENT, 4" MIN. EDGE DISTANCE INTO MIN. 6000 PSI CONCRETE.
		3/8" X 2-1/2" DEWALT SCREW-BOLT+ FH ANCHORS WITH MIN. 1-1/2" NOMINAL EMBEDMENT, 4" MIN. EDGE DISTANCE INTO MIN. 6000 PSI CONCRETE.
METAL STRUCTURE	STEEL MIN. A36 ALUMINUM MIN. 6063-T6	3/8" DIA. MACHINE SCREW (GR. 5) W/ MIN. 3 THREAD PENETRATION BEYOND METAL THICKNESS INTO METAL STRUCTURE (STEEL 1/4" MIN. THK.) WITH 1" MIN. EDGE DISTANCE AND 1-1/2" MIN. SPACING.

JAVAD AHMAD PE, inc
7875 NW 12 Street, Suite 102
Doral, FL 33126
Ph: (305) 424-8001
support@ja-pe.com
CONSULTING • STRUCTURAL DESIGN • FACADES • BUILDING ENVELOPE • SYSTEM DESIGN • PRODUCT APPROVALS

PROJECT :
MB-SR50N STOREFRONT SYSTEM

CLIENT :
ALUPROF SA

UL.WARSZAWSKA 153, 43-300
BIELSKO-BIALA, POLAND

REVISION

No.	DATE	BY	DESCRIPTION

date:	12-20-2024
scale:	N/A
drawn by:	MK
check by:	BS
Drawing no.	JA-1985-24

Eng: JAVAD AHMAD, PE
CIVIL FLA. PE # 70592 - C.A.N.34254

JAVAD AHMAD LICENSE No 70592 STATE OF FLORIDA PROFESSIONAL ENGINEER

12-20-2024

F-BRACKET DETAIL

FL# 46591

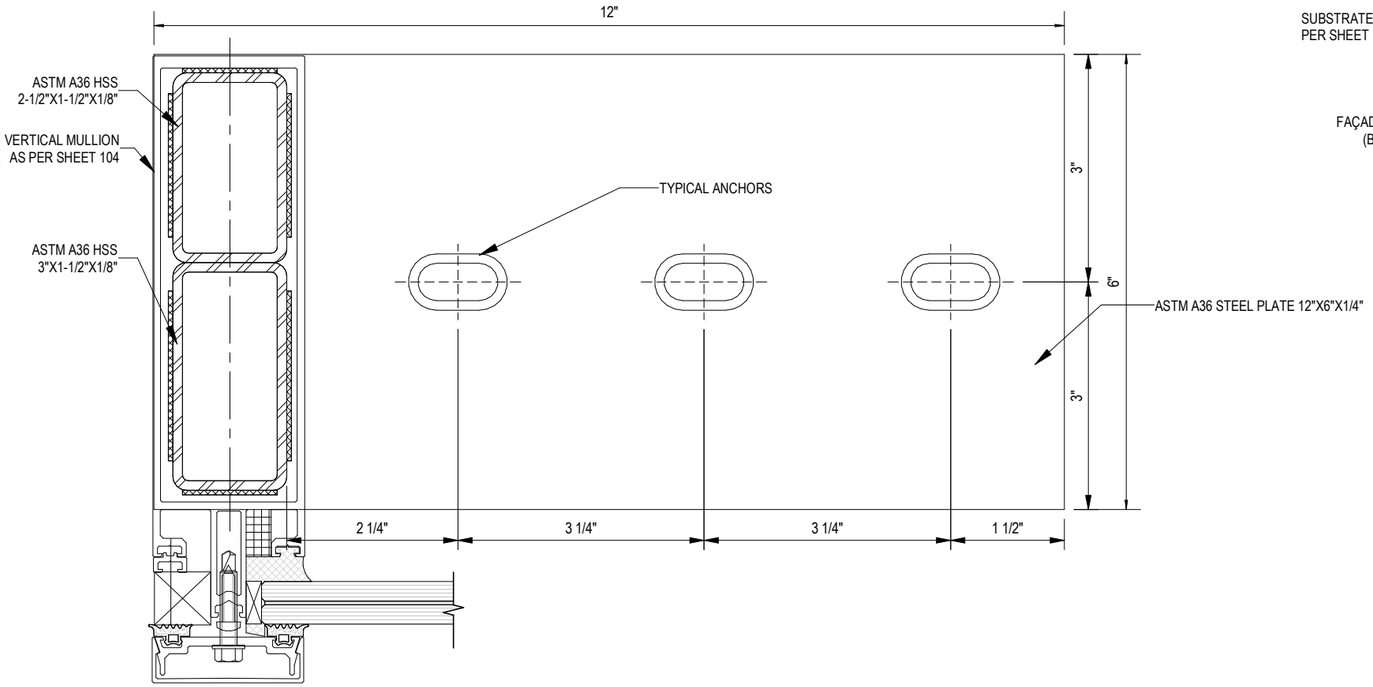

PLAN VIEW

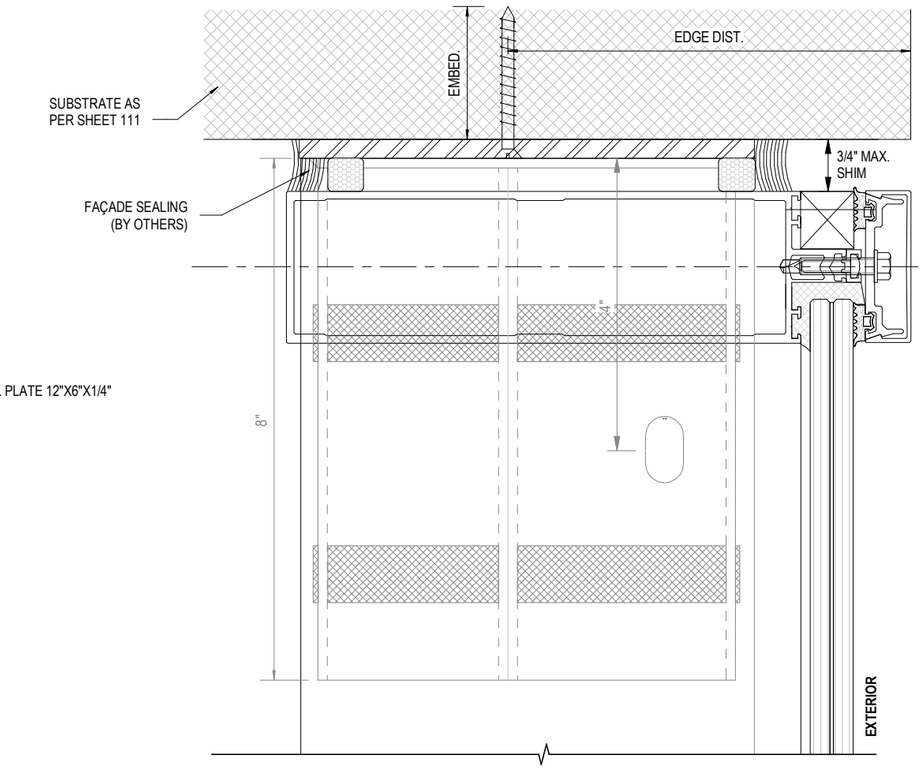

SIDE VIEW

1/113 **F-BRACKET FOR K431526X MULLION AT HEAD**
N.T.S.

MATERIAL: ASTM A36 STEEL
ALLOWABLE DESIGN PRESSURE: +/-64 PSF

NOTE:
- FOR THIS BRACKET, TYPICAL SLOTTED HOLES SHALL BE PROVIDED IN THE TUBE WITH MIN. DIA. 1/2" FOR THE CONNECTION OF VERTICAL MULLION TO THE BRACKET.
- FOR ANCHORS BEING EMBEDDED INTO P.T. SLAB, THE CONTRACTOR SHALL BE RESPONSIBLE FOR TAKING ALL THE SAFETY PRECAUTIONS TO AVOID DAMAGING TO THE EXISTING P.T. TENDONS.
- PROVIDE PVC PADDING, FOR THE MULLION TO BE SNUG FIT WITH THE BRACKETS.

SUBSTRATE	GRADE	ANCHOR TYPE
CONCRETE	3000 PSI	3/8" X 4" HILTI KH-EZ C ANCHORS WITH MIN. 3-1/4" NOMINAL EMBEDMENT, 4" MIN. EDGE DISTANCE INTO MIN. 3000 PSI CONCRETE.
		3/8" X 2-1/2" DEWALT SCREW-BOLT+ FH ANCHORS WITH MIN. 2" NOMINAL EMBEDMENT, 4" MIN. EDGE DISTANCE INTO MIN. 3000 PSI CONCRETE.
CONCRETE	6000 PSI	3/8" X 4" HILTI KH-EZ C ANCHORS WITH MIN. 3-1/4" NOMINAL EMBEDMENT, 4" MIN. EDGE DISTANCE INTO MIN. 6000 PSI CONCRETE.
		3/8" X 2-1/2" DEWALT SCREW-BOLT+ FH ANCHORS WITH MIN. 1-1/2" NOMINAL EMBEDMENT, 4" MIN. EDGE DISTANCE INTO MIN. 6000 PSI CONCRETE.
METAL STRUCTURE	STEEL MIN. A36 ALUMINUM MIN. 6063-T6	3/8" DIA. MACHINE SCREW (GR. 5) W/ MIN. 3 THREAD PENETRATION BEYOND METAL THICKNESS INTO METAL STRUCTURE (STEEL 1/4" MIN. THK.) WITH 1" MIN. EDGE DISTANCE AND 1-1/2" MIN. SPACING.

JAVAD AHMAD PE, inc
7875 NW 12 Street, Suite 102
Doral, FL 33126
Ph: (305) 424-8001
support@ja-pe.com
CONSULTING • STRUCTURAL DESIGN • FACADES • BUILDING ENVELOPE • SYSTEM DESIGN • PRODUCT APPROVALS

PROJECT :
MB-SR50N STOREFRONT SYSTEM

CLIENT :
ALUPROF SA

UL.WARSZAWSKA 153, 43-300
BIELSKO-BIALA, POLAND

REVISION

No.	DATE	BY	DESCRIPTION

date:	12-20-2024
scale:	N/A
drawn by:	MK
check by:	BS
Drawing no.	JA-1985-24

Eng: JAVAD AHMAD, PE
CIVIL FLA. PE # 70592 - C.A.N.34254

JAVAD AHMAD LICENSE No 70592 STATE OF FLORIDA PROFESSIONAL ENGINEER

12-20-2024

F-BRACKET DETAIL

FL# 46591

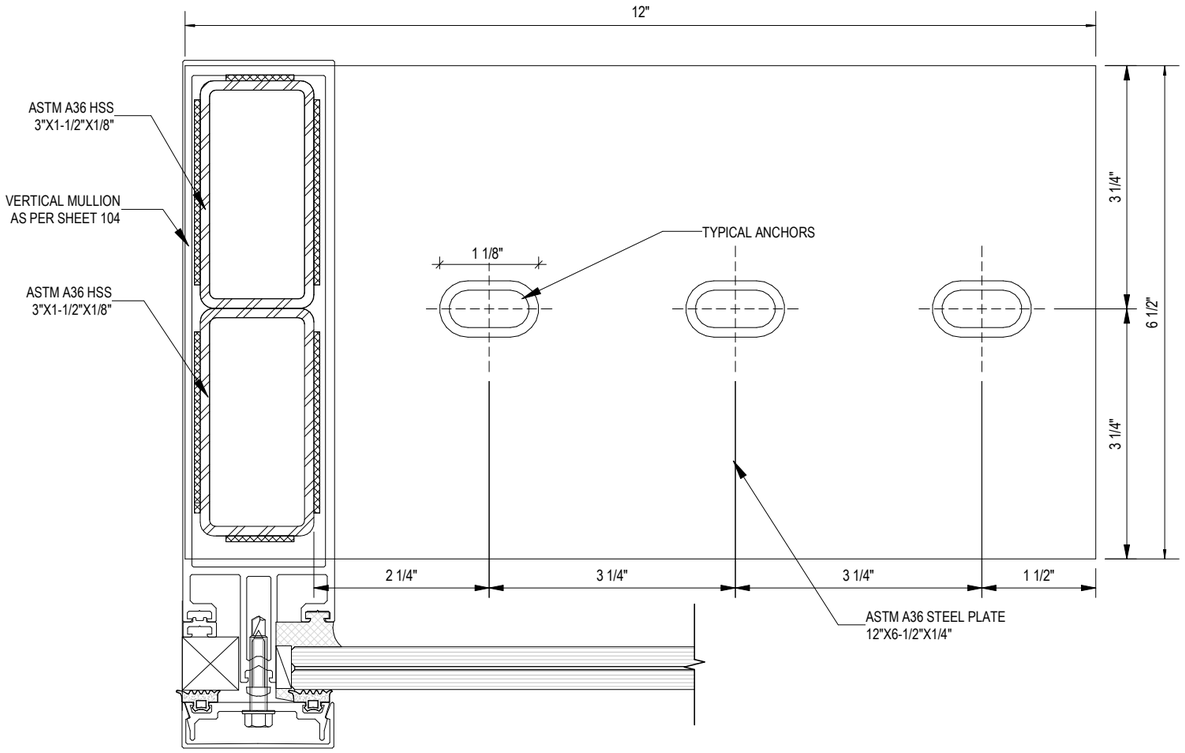

PLAN VIEW

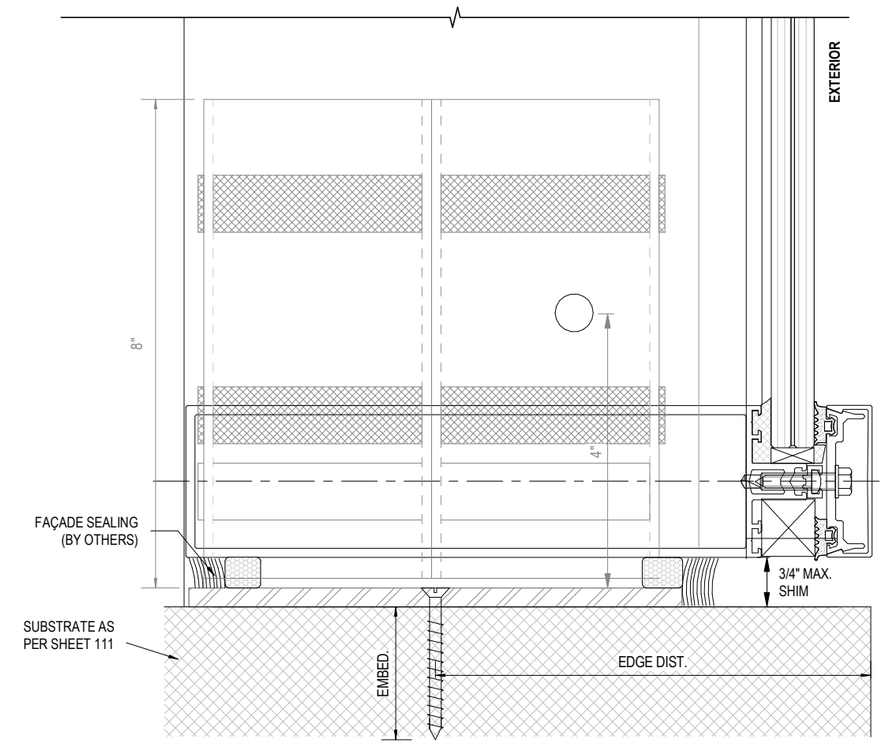

SIDE VIEW

1/114 **F-BRACKET FOR K431527X MULLION AT SILL**
N.T.S.

MATERIAL: ASTM A36 STEEL
ALLOWABLE DESIGN PRESSURE: +/-64 PSF

NOTE:
- FOR ANCHORS BEING EMBEDDED INTO P.T. SLAB, THE CONTRACTOR SHALL BE RESPONSIBLE FOR TAKING ALL THE SAFETY PRECAUTIONS TO AVOID DAMAGING TO THE EXISTING P.T. TENDONS.
- PROVIDE PVC PADDING, FOR THE MULLION TO BE SNUG FIT WITH THE BRACKETS.

SUBSTRATE	GRADE	ANCHOR TYPE
CONCRETE	3000 PSI	3/8" X 4" HILTI KH-EZ C ANCHORS WITH MIN. 3-1/4" NOMINAL EMBEDMENT, 4" MIN. EDGE DISTANCE INTO MIN. 3000 PSI CONCRETE.
		3/8" X 2-1/2" DEWALT SCREW-BOLT+ FH ANCHORS WITH MIN. 2" NOMINAL EMBEDMENT, 4" MIN. EDGE DISTANCE INTO MIN. 3000 PSI CONCRETE.
CONCRETE	6000 PSI	3/8" X 4" HILTI KH-EZ C ANCHORS WITH MIN. 3-1/4" NOMINAL EMBEDMENT, 4" MIN. EDGE DISTANCE INTO MIN. 6000 PSI CONCRETE.
		3/8" X 2-1/2" DEWALT SCREW-BOLT+ FH ANCHORS WITH MIN. 1-1/2" NOMINAL EMBEDMENT, 4" MIN. EDGE DISTANCE INTO MIN. 6000 PSI CONCRETE.
METAL STRUCTURE	STEEL MIN. A36 ALUMINUM MIN. 6063-T6	3/8" DIA. MACHINE SCREW (GR. 5) W/ MIN. 3 THREAD PENETRATION BEYOND METAL THICKNESS INTO METAL STRUCTURE (STEEL 1/4" MIN. THK.) WITH 1" MIN. EDGE DISTANCE AND 1-1/2" MIN. SPACING.

JAVAD AHMAD PE, inc
7875 NW 12 Street, Suite 102
Doral, FL 33126
Ph: (305) 424-8001
support@ja-pe.com
CONSULTING • STRUCTURAL DESIGN • FACADES • BUILDING ENVELOPE • SYSTEM DESIGN • PRODUCT APPROVALS

PROJECT :
MB-SR50N STOREFRONT SYSTEM

CLIENT :
ALUPROF SA

UL.WARSZAWSKA 153, 43-300
BIELSKO-BIALA, POLAND

REVISION

No.	DATE	BY	DESCRIPTION

date:	12-20-2024
scale:	N/A
drawn by:	MK
check by:	BS
Drawing no.	JA-1985-24

Eng: JAVAD AHMAD, PE
CIVIL FLA. PE # 70592 - C.A.N.34254

JAVAD AHMAD LICENSE No 70592 STATE OF FLORIDA PROFESSIONAL ENGINEER

12-20-2024

F-BRACKET DETAIL

FL# 46591

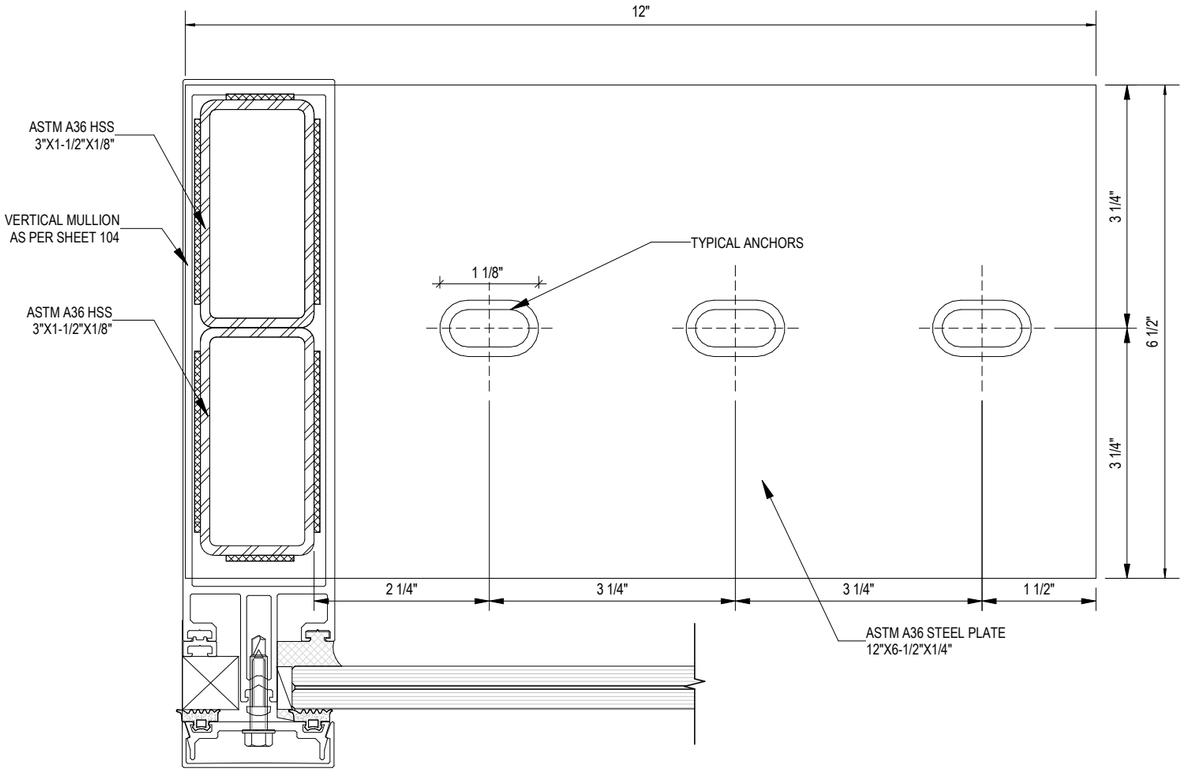

PLAN VIEW

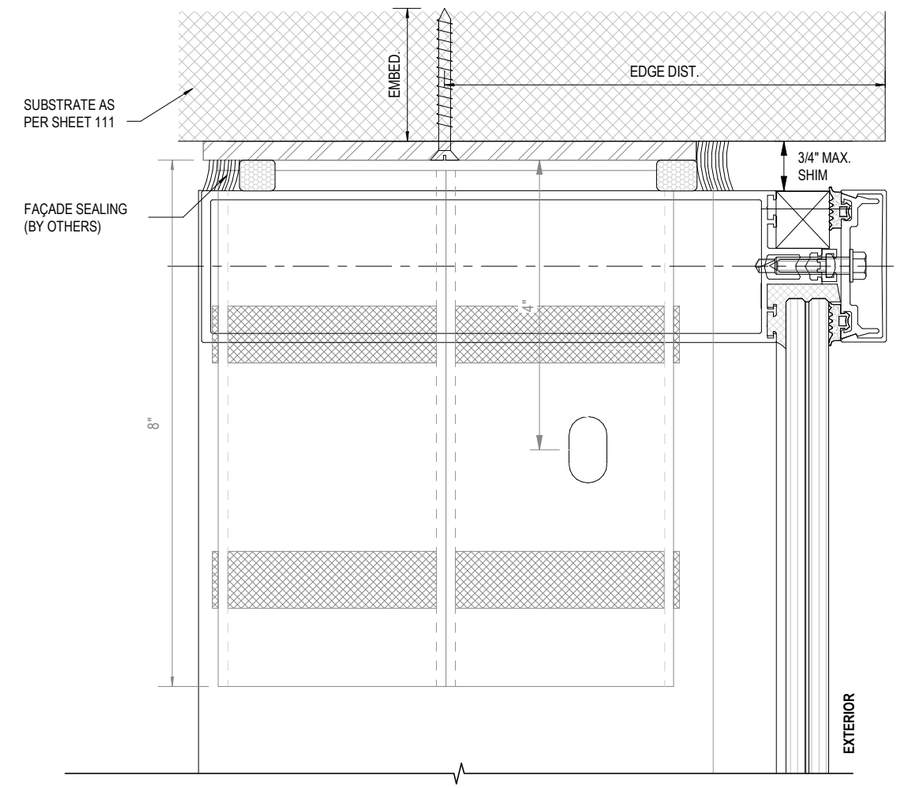

SIDE VIEW

1/115 **F-BRACKET FOR K431527X MULLION AT HEAD**
N.T.S.

MATERIAL: ASTM A36 STEEL
ALLOWABLE DESIGN PRESSURE: +/-64 PSF

NOTE:
- FOR THIS BRACKET, TYPICAL SLOTTED HOLES SHALL BE PROVIDED IN THE TUBE WITH MIN. DIA. 1/2" FOR THE CONNECTION OF VERTICAL MULLION TO THE BRACKET.
- FOR ANCHORS BEING EMBEDDED INTO P.T. SLAB, THE CONTRACTOR SHALL BE RESPONSIBLE FOR TAKING ALL THE SAFETY PRECAUTIONS TO AVOID DAMAGING TO THE EXISTING P.T. TENDONS.
- PROVIDE PVC PADDING, FOR THE MULLION TO BE SNUG FIT WITH THE BRACKETS.

SUBSTRATE	GRADE	ANCHOR TYPE
CONCRETE	3000 PSI	3/8" X 4" HILTI KH-EZ C ANCHORS WITH MIN. 3-1/4" NOMINAL EMBEDMENT, 4" MIN. EDGE DISTANCE INTO MIN. 3000 PSI CONCRETE.
		3/8" X 2-1/2" DEWALT SCREW-BOLT+ FH ANCHORS WITH MIN. 2" NOMINAL EMBEDMENT, 4" MIN. EDGE DISTANCE INTO MIN. 3000 PSI CONCRETE.
CONCRETE	6000 PSI	3/8" X 4" HILTI KH-EZ C ANCHORS WITH MIN. 3-1/4" NOMINAL EMBEDMENT, 4" MIN. EDGE DISTANCE INTO MIN. 6000 PSI CONCRETE.
		3/8" X 2-1/2" DEWALT SCREW-BOLT+ FH ANCHORS WITH MIN. 1-1/2" NOMINAL EMBEDMENT, 4" MIN. EDGE DISTANCE INTO MIN. 6000 PSI CONCRETE.
METAL STRUCTURE	STEEL MIN. A36 ALUMINUM MIN. 6063-T6	3/8" DIA. MACHINE SCREW (GR. 5) W/ MIN. 3 THREAD PENETRATION BEYOND METAL THICKNESS INTO METAL STRUCTURE (STEEL 1/4" MIN. THK.) WITH 1" MIN. EDGE DISTANCE AND 1-1/2" MIN. SPACING.

JAVAD AHMAD PE, inc
7875 NW 12 Street, Suite 102
Doral, FL 33126
Ph: (305) 424-8001
support@ja-pe.com
CONSULTING • STRUCTURAL DESIGN • FACADES • BUILDING ENVELOPE • SYSTEM DESIGN • PRODUCT APPROVALS

PROJECT :
MB-SR50N STOREFRONT SYSTEM

CLIENT :
ALUPROF SA

UL.WARSZAWSKA 153, 43-300
BIELSKO-BIALA, POLAND

REVISION

No.	DATE	BY	DESCRIPTION

date:	12-20-2024
scale:	N/A
drawn by:	MK
check by:	BS
Drawing no.	JA-1985-24

Eng: JAVAD AHMAD, PE
CIVIL FLA. PE # 70592 - C.A.N.34254

JAVAD AHMAD LICENSE No 70592 STATE OF FLORIDA PROFESSIONAL ENGINEER

12-20-2024

F-BRACKET DETAIL

FL# 46591

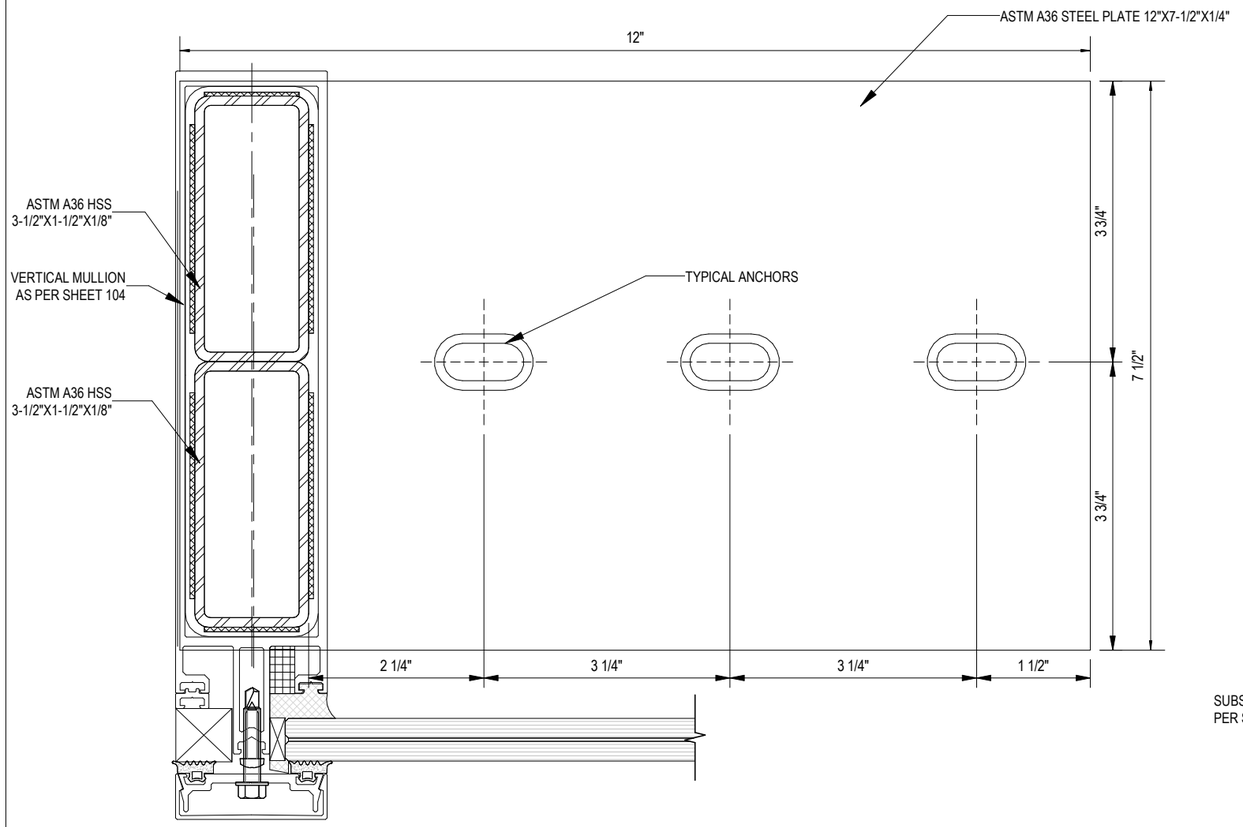

PLAN VIEW

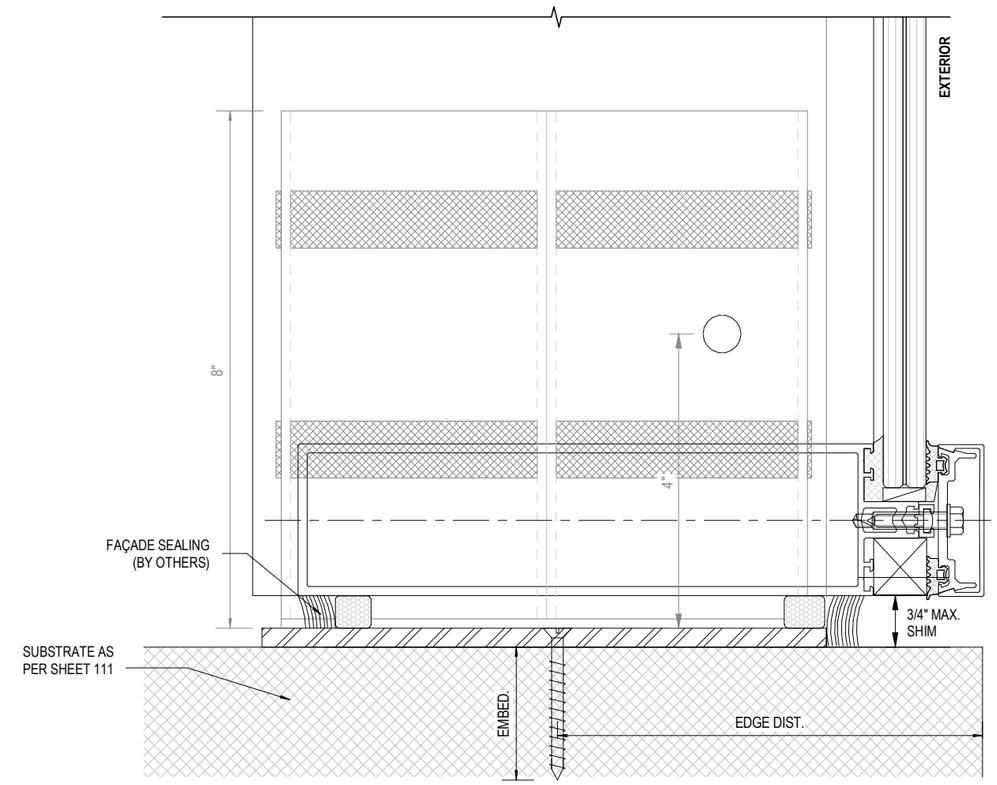

SIDE VIEW

1
116

F-BRACKET FOR K431528X MULLION AT SILL

N.T.S.

MATERIAL: ASTM A36 STEEL
ALLOWABLE DESIGN PRESSURE: +/-64 PSF

NOTE:
- FOR ANCHORS BEING EMBEDDED INTO P.T. SLAB, THE CONTRACTOR SHALL BE RESPONSIBLE FOR TAKING ALL THE SAFETY PRECAUTIONS TO AVOID DAMAGING TO THE EXISTING P.T. TENDONS.
- PROVIDE PVC PADDING, FOR THE MULLION TO BE SNUG FIT WITH THE BRACKETS.

SUBSTRATE	GRADE	ANCHOR TYPE
CONCRETE	3000 PSI	3/8" X 4" HILTI KH-EZ C ANCHORS WITH MIN. 3-1/4" NOMINAL EMBEDMENT, 4" MIN. EDGE DISTANCE INTO MIN. 3000 PSI CONCRETE.
		3/8" X 2-1/2" DEWALT SCREW-BOLT+ FH ANCHORS WITH MIN. 2" NOMINAL EMBEDMENT, 4" MIN. EDGE DISTANCE INTO MIN. 3000 PSI CONCRETE.
CONCRETE	6000 PSI	3/8" X 4" HILTI KH-EZ C ANCHORS WITH MIN. 3-1/4" NOMINAL EMBEDMENT, 4" MIN. EDGE DISTANCE INTO MIN. 6000 PSI CONCRETE.
		3/8" X 2-1/2" DEWALT SCREW-BOLT+ FH ANCHORS WITH MIN. 1-1/2" NOMINAL EMBEDMENT, 4" MIN. EDGE DISTANCE INTO MIN. 6000 PSI CONCRETE.
METAL STRUCTURE	STEEL MIN. A36 ALUMINUM MIN. 6063-T6	3/8" DIA. MACHINE SCREW (GR. 5) W/ MIN. 3 THREAD PENETRATION BEYOND METAL THICKNESS INTO METAL STRUCTURE (STEEL 1/4" MIN. THK.) WITH 1" MIN. EDGE DISTANCE AND 1-1/2" MIN. SPACING.

JAVAD AHMAD PE, inc
7875 NW 12 Street, Suite 102
Doral, FL 33126
Ph: (305) 424-8001
support@ja-pe.com
CONSULTING • STRUCTURAL DESIGN • FACADES • BUILDING ENVELOPE • SYSTEM DESIGN • PRODUCT APPROVALS

PROJECT :
MB-SR50N STOREFRONT SYSTEM

CLIENT :
ALUPROF SA

UL.WARSZAWSKA 153, 43-300
BIELSKO-BIALA, POLAND

REVISION

No.	DATE	BY	DESCRIPTION

date:	12-20-2024
scale:	N/A
drawn by:	MK
check by:	BS
Drawing no.	JA-1985-24

Eng: JAVAD AHMAD, PE
CIVIL FLA. PE # 70592 - C.A.N.34254

JAVAD AHMAD LICENSE No 70592 STATE OF FLORIDA PROFESSIONAL ENGINEER

12-20-2024

F-BRACKET DETAIL

FL# 46591

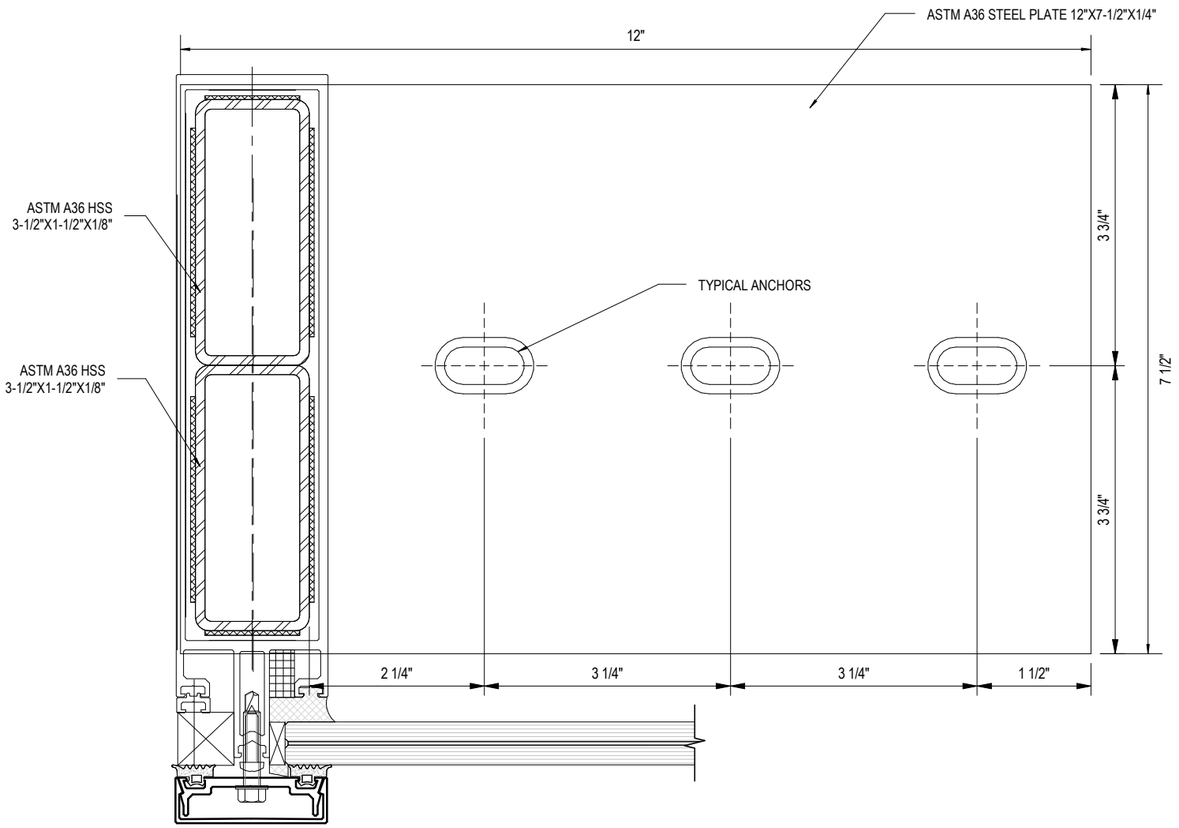

PLAN VIEW

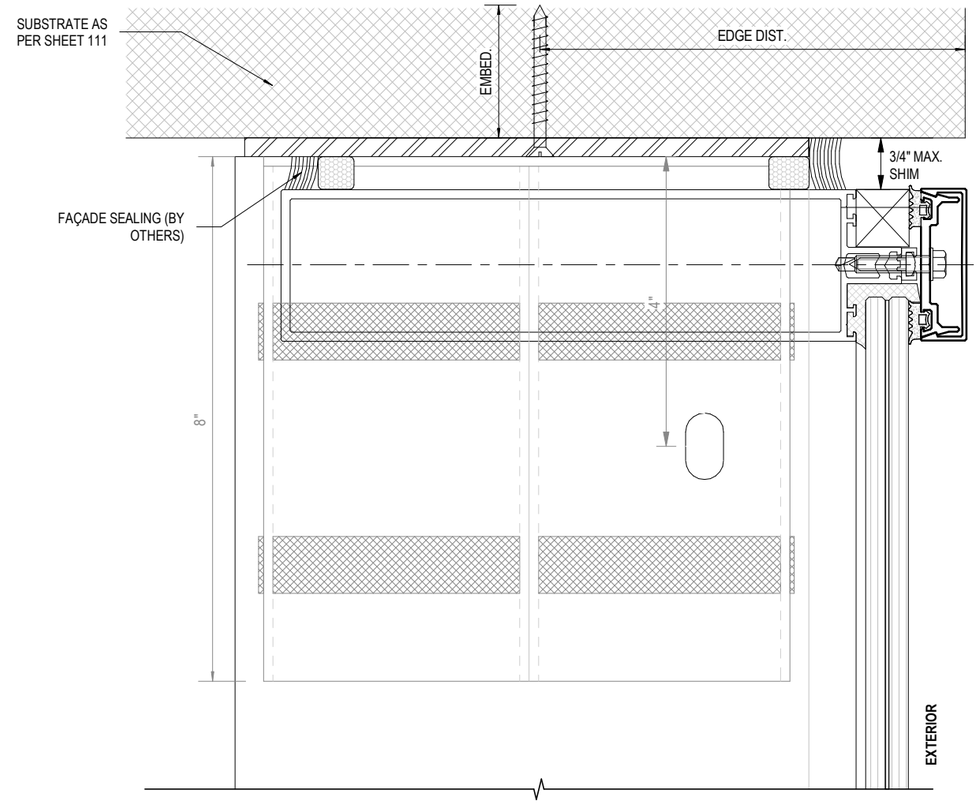

SIDE VIEW

1/117 **F-BRACKET FOR K431528X MULLION AT HEAD**

N.T.S.

MATERIAL: ASTM A36 STEEL
ALLOWABLE DESIGN PRESSURE: +/-64 PSF

NOTE:
- FOR THIS BRACKET, TYPICAL SLOTTED HOLES SHALL BE PROVIDED IN THE TUBE WITH MIN. DIA. 3/8" FOR THE CONNECTION OF VERTICAL MULLION TO THE BRACKET.
- FOR ANCHORS BEING EMBEDDED INTO P.T. SLAB, THE CONTRACTOR SHALL BE RESPONSIBLE FOR TAKING ALL THE SAFETY PRECAUTIONS TO AVOID DAMAGING TO THE EXISTING P.T. TENDONS.
- PROVIDE PVC PADDING, FOR THE MULLION TO BE SNUG FIT WITH THE BRACKETS.

SUBSTRATE	GRADE	ANCHOR TYPE
CONCRETE	3000 PSI	3/8" X 4" HILTI KH-EZ C ANCHORS WITH MIN. 3-1/4" NOMINAL EMBEDMENT, 4" MIN. EDGE DISTANCE INTO MIN. 3000 PSI CONCRETE.
		3/8" X 2-1/2" DEWALT SCREW-BOLT+ FH ANCHORS WITH MIN. 2" NOMINAL EMBEDMENT, 4" MIN. EDGE DISTANCE INTO MIN. 3000 PSI CONCRETE.
CONCRETE	6000 PSI	3/8" X 4" HILTI KH-EZ C ANCHORS WITH MIN. 3-1/4" NOMINAL EMBEDMENT, 4" MIN. EDGE DISTANCE INTO MIN. 6000 PSI CONCRETE.
		3/8" X 2-1/2" DEWALT SCREW-BOLT+ FH ANCHORS WITH MIN. 1-1/2" NOMINAL EMBEDMENT, 4" MIN. EDGE DISTANCE INTO MIN. 6000 PSI CONCRETE.
METAL STRUCTURE	STEEL MIN. A36 ALUMINUM MIN. 6063-T6	3/8" DIA. MACHINE SCREW (GR. 5) W/ MIN. 3 THREAD PENETRATION BEYOND METAL THICKNESS INTO METAL STRUCTURE (STEEL 1/4" MIN. THK.) WITH 1" MIN. EDGE DISTANCE AND 1-1/2" MIN. SPACING.

JAVAD AHMAD PE, inc
7875 NW 12 Street, Suite 102
Doral, FL 33126
Ph: (305) 424-8001
support@ja-pe.com
CONSULTING • STRUCTURAL DESIGN • FACADES • BUILDING ENVELOPE • SYSTEM DESIGN • PRODUCT APPROVALS

PROJECT :

MB-SR50N STOREFRONT SYSTEM

CLIENT :

ALUPROF SA

UL.WARSZAWSKA 153, 43-300
BIELSKO-BIALA, POLAND

REVISION

No.	DATE	BY	DESCRIPTION

date:	12-20-2024
scale:	N/A
drawn by:	MK
check by:	BS
Drawing no.	JA-1985-24

Eng: JAVAD AHMAD, PE
CIVIL FLA. PE # 70592 - C.A.N.34254

JAVAD AHMAD LICENSE No 70592 STATE OF FLORIDA PROFESSIONAL ENGINEER

12-20-2024

ACTIVE BRACKET DETAIL

FL# 46591

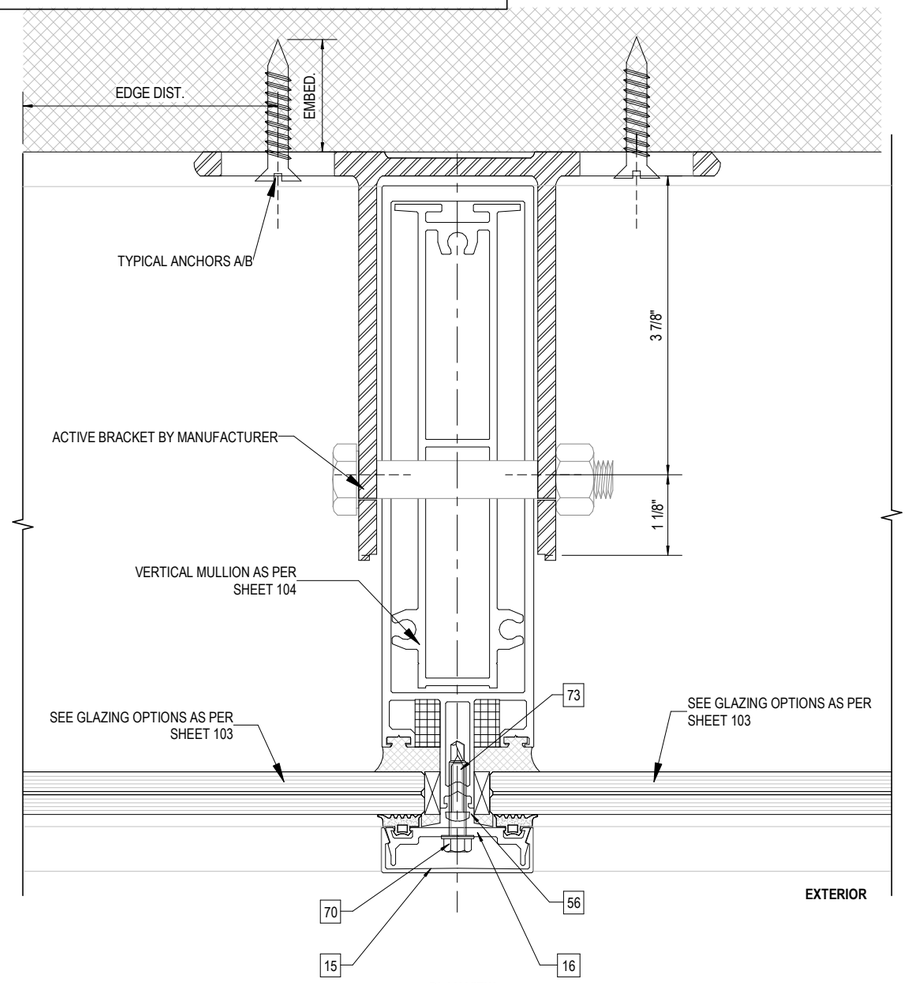

PLAN VIEW

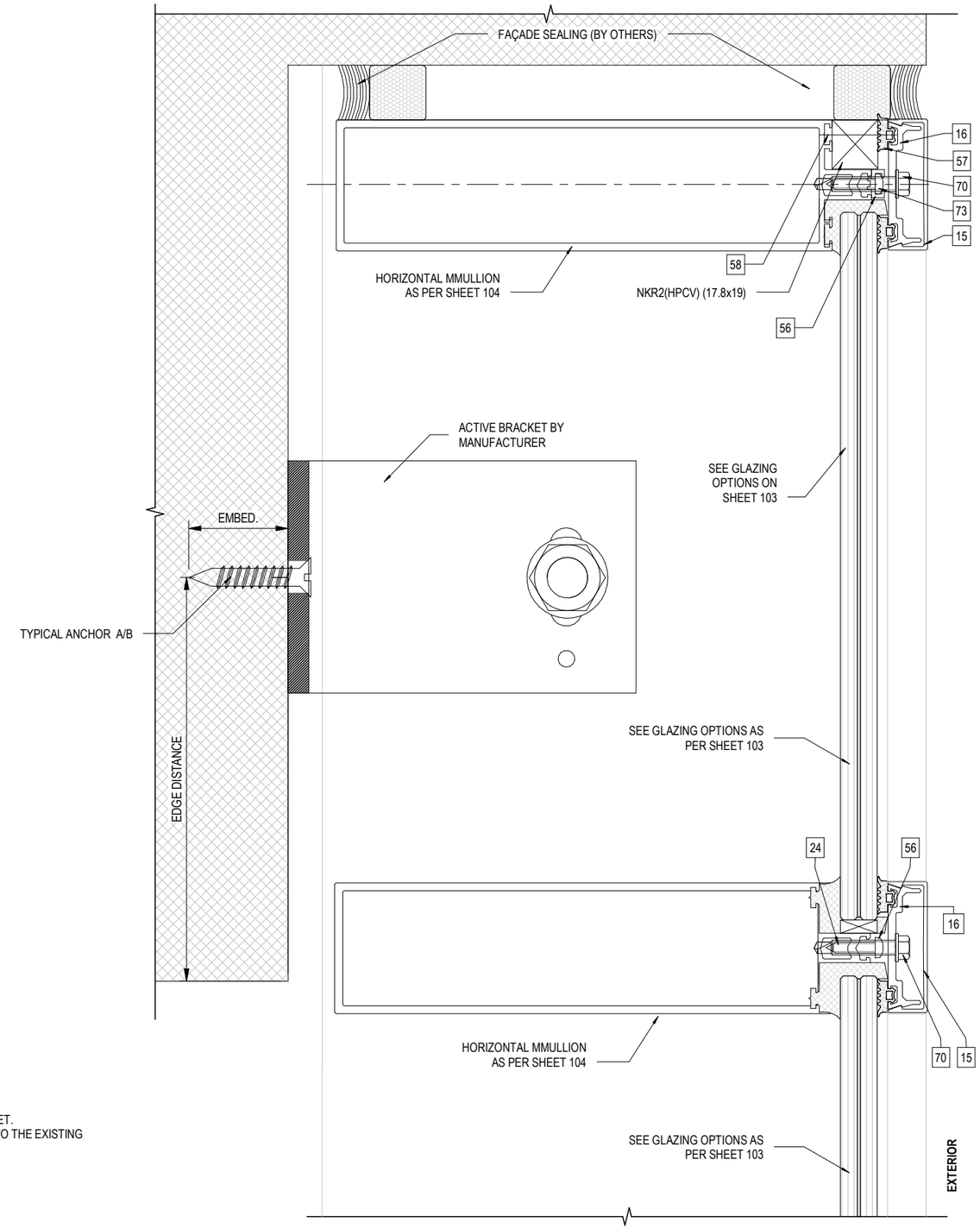

SIDE VIEW

ALLOWABLE DESIGN PRESSURE: +/-64 PSF

TYPICAL ANCHORS:

TYPE A-
3/8" DIA. SIMPSON TITEN HD ANCHORS WITH MIN. 2-1/2" NOMINAL EMBEDMENT, 1-3/4" MIN. EDGE DISTANCE INTO MIN. 3000 PSI CONCRETE.

TYPE B-
3/8" DIA. DEWALT SCREW-BOLT+ FH ANCHORS WITH MIN. 2" NOMINAL EMBEDMENT, 2" MIN. EDGE DISTANCE INTO MIN. 3000 PSI CONCRETE.

NOTE:

- FOR THIS BRACKET, TYPICAL SLOTTED HOLES SHALL BE PROVIDED IN THE TUBE WITH MIN. DIA. 1/2" FOR THE CONNECTION OF VERTICAL MULLION TO THE BRACKET.
- FOR ANCHORS BEING EMBEDDED INTO P.T. SLAB, THE CONTRACTOR SHALL BE RESPONSIBLE FOR TAKING ALL THE SAFETY PRECAUTIONS TO AVOID DAMAGING TO THE EXISTING P.T. TENDONS.
- PROVIDE PVC PADDING, FOR THE MULLION TO BE SNUG FIT WITH THE BRACKETS.

1 / 118

ACTIVE BRACKET FOR OVERHANGED SLAB- 80002128

N.T.S.

JAVAD AHMAD PE, inc

7875 NW 12 Street, Suite 102
Doral, FL 33126
Ph: (305) 424-8001
support@ja-pe.com

CONSULTING • STRUCTURAL DESIGN • FACADES • BUILDING ENVELOPE • SYSTEM DESIGN • PRODUCT APPROVALS

PROJECT :

MB-SR50N STOREFRONT SYSTEM

CLIENT :

ALUPROF SA

UL.WARSZAWSKA 153, 43-300
BIELSKO-BIALA, POLAND

REVISION

No.	DATE	BY	DESCRIPTION

date:	12-20-2024
scale:	N/A
drawn by:	MK
check by:	BS
Drawing no.	JA-1985-24

Eng: JAVAD AHMAD, PE
CIVIL FLA. PE # 70592 - C.A.N.34254

JAVAD AHMAD LICENSE No 70592 STATE OF FLORIDA PROFESSIONAL ENGINEER

12-20-2024

CORNER BRACKET DETAIL

FL# 46591

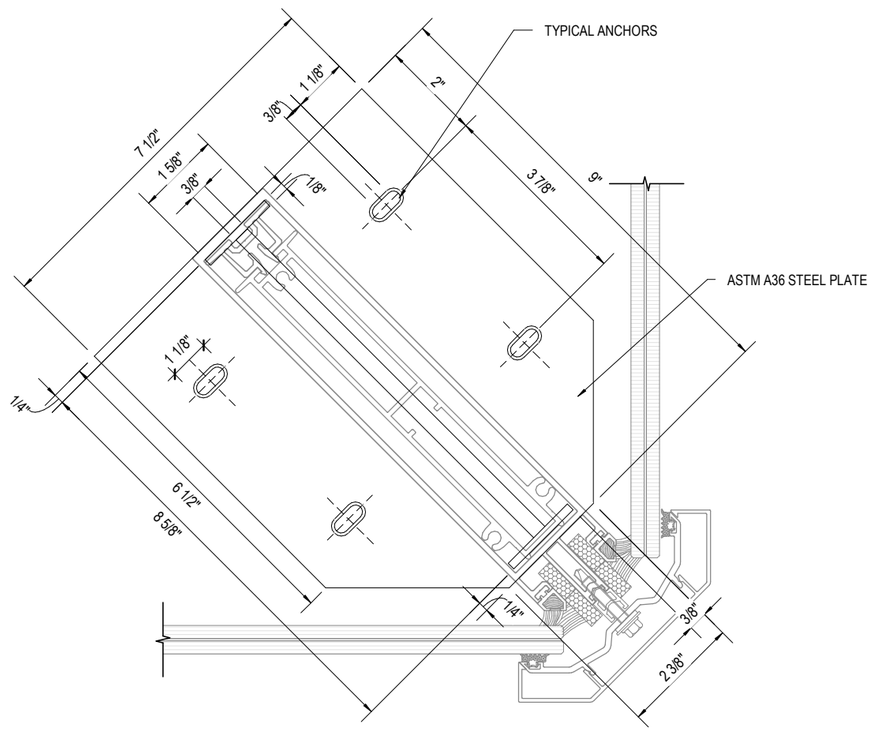

PLAN VIEW

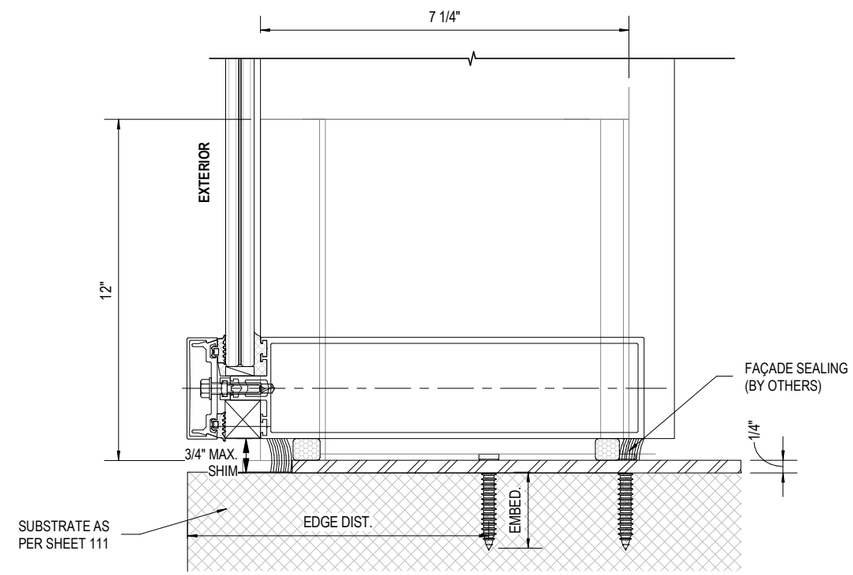

SIDE VIEW

1/119 **EXTERIOR CORNER BRACKET FOR K434086X MULLION AT SILL**
N.T.S.

MATERIAL: ASTM A36 STEEL
ALLOWABLE DESIGN PRESSURE: +/-70 PSF

NOTE:
- FOR ANCHORS BEING EMBEDDED INTO P.T. SLAB, THE CONTRACTOR SHALL BE RESPONSIBLE FOR TAKING ALL THE SAFETY PRECAUTIONS TO AVOID DAMAGING TO THE EXISTING P.T. TENDONS.

SUBSTRATE	GRADE	ANCHOR TYPE
CONCRETE	3000 PSI	5/8"X 5-1/2" HILTI KWIK HUS-EZ (KH-EZ) ANCHORS WITH MIN. 5" NOMINAL EMBEDMENT, 4" MIN. EDGE DISTANCE INTO MIN. 3000 PSI CONCRETE.
		3/8" X 3" DEWALT SCREW-BOLT+ ANCHORS WITH MIN 2-1/2" NOMINAL EMBEDMENT, 4" MIN. EDGE DISTANCE INTO MIN 3000 PSI CONCRETE.
CONCRETE	6000 PSI	5/8"X 5-1/2" HILTI KWIK HUS-EZ (KH-EZ) ANCHORS WITH MIN. 5" NOMINAL EMBEDMENT, 4" MIN. EDGE DISTANCE INTO MIN. 6000 PSI CONCRETE.
		3/8" X 3" DEWALT SCREW-BOLT+ ANCHORS WITH MIN 2-1/2" NOMINAL EMBEDMENT, 4" MIN. EDGE DISTANCE INTO MIN 6000 PSI CONCRETE.
METAL STRUCTURE	STEEL MIN. A36 ALUMINUM MIN. 6063-T6	3/8" DIA. MACHINE SCREW (GR.5) INTO METAL SUBSTRATE W/ MIN. 3 THREAD PENETRATION BEYOND METAL THICKNESS, 1" MIN. EDGE DISTANCE AND 1-1/2" MIN. SPACING.

JAVAD AHMAD PE, inc
7875 NW 12 Street, Suite 102
Doral, FL 33126
Ph: (305) 424-8001
support@ja-pe.com
CONSULTING • STRUCTURAL DESIGN • FACADES • BUILDING ENVELOPE • SYSTEM DESIGN • PRODUCT APPROVALS

PROJECT :
MB-SR50N STOREFRONT SYSTEM

CLIENT :
ALUPROF SA

UL.WARSZAWSKA 153, 43-300
BIELSKO-BIALA, POLAND

REVISION

No.	DATE	BY	DESCRIPTION

date:	12-20-2024
scale:	N/A
drawn by:	MK
check by:	BS
Drawing no.	JA-1985-24

Eng: JAVAD AHMAD, PE
CIVIL FLA. PE # 70592 - C.A.N.34254

JAVAD AHMAD LICENSE No 70592 STATE OF FLORIDA PROFESSIONAL ENGINEER

12-20-2024

CORNER BRACKET DETAIL

FL# 46591

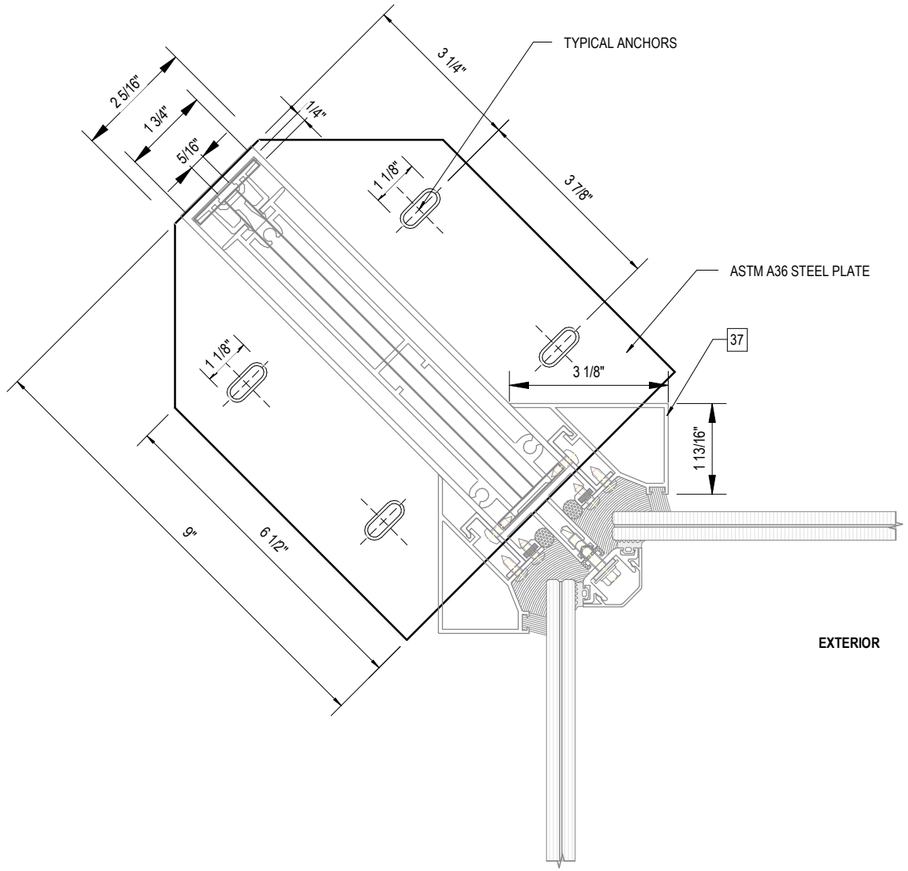

PLAN VIEW

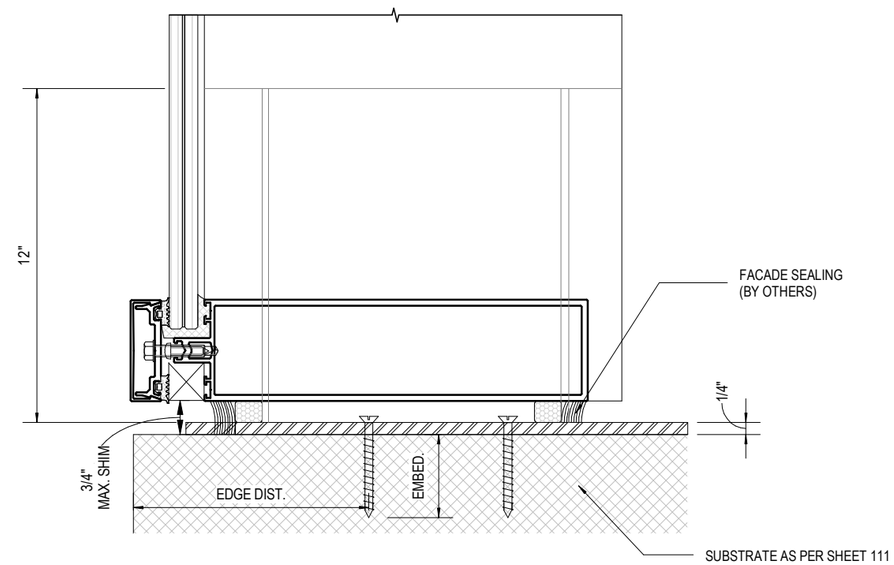

SIDE VIEW

1/120 **INTERIOR CORNER BRACKET FOR K434056X MULLION AT SILL**

N.T.S.

MATERIAL: ASTM A36 STEEL
ALLOWABLE DESIGN PRESSURE: +/-70 PSF

NOTE:
- FOR ANCHORS BEING EMBEDDED INTO P.T. SLAB, THE CONTRACTOR SHALL BE RESPONSIBLE FOR TAKING ALL THE SAFETY PRECAUTIONS TO AVOID DAMAGING TO THE EXISTING P.T. TENDONS.

SUBSTRATE	GRADE	ANCHOR TYPE
CONCRETE	3000 PSI	5/8"X 5-1/2" HILTI KWIK HUS-EZ (KH-EZ) ANCHORS WITH MIN. 5" NOMINAL EMBEDMENT, 4" MIN. EDGE DISTANCE INTO MIN. 3000 PSI CONCRETE.
		3/8" X 3" DEWALT SCREW-BOLT+ ANCHORS WITH MIN 2-1/2" NOMINAL EMBEDMENT, 4" MIN. EDGE DISTANCE INTO MIN 3000 PSI CONCRETE.
CONCRETE	6000 PSI	5/8"X 5-1/2" HILTI KWIK HUS-EZ (KH-EZ) ANCHORS WITH MIN. 5" NOMINAL EMBEDMENT, 4" MIN. EDGE DISTANCE INTO MIN. 6000 PSI CONCRETE.
		3/8" X 3" DEWALT SCREW-BOLT+ ANCHORS WITH MIN 2-1/2" NOMINAL EMBEDMENT, 4" MIN. EDGE DISTANCE INTO MIN 6000 PSI CONCRETE.
METAL STRUCTURE	STEEL MIN. A36 ALUMINUM MIN. 6063-T6	3/8" DIA. MACHINE SCREW (GR.5) INTO METAL SUBSTRATE W/ MIN. 3 THREAD PENETRATION BEYOND METAL THICKNESS, 1" MIN. EDGE DISTANCE AND 1-1/2" MIN. SPACING.

JAVAD AHMAD PE, inc
7875 NW 12 Street, Suite 102
Doral, FL 33126
Ph: (305) 424-8001
support@ja-pe.com
CONSULTING • STRUCTURAL DESIGN • FACADES • BUILDING ENVELOPE • SYSTEM DESIGN • PRODUCT APPROVALS

PROJECT :

MB-SR50N STOREFRONT SYSTEM

CLIENT :

ALUPROF SA

UL.WARSZAWSKA 153, 43-300
BIELSKO-BIALA, POLAND

REVISION

No.	DATE	BY	DESCRIPTION

date:	12-20-2024
scale:	N/A
drawn by:	MK
check by:	BS
Drawing no.	JA-1985-24

Eng: JAVAD AHMAD, PE
CIVIL FLA. PE # 70592 - C.A.N.34254

JAVAD AHMAD LICENSE No 70592 STATE OF FLORIDA PROFESSIONAL ENGINEER

12-20-2024

ALTERNATIVE F-BRACKET DETAIL

FL# 46591

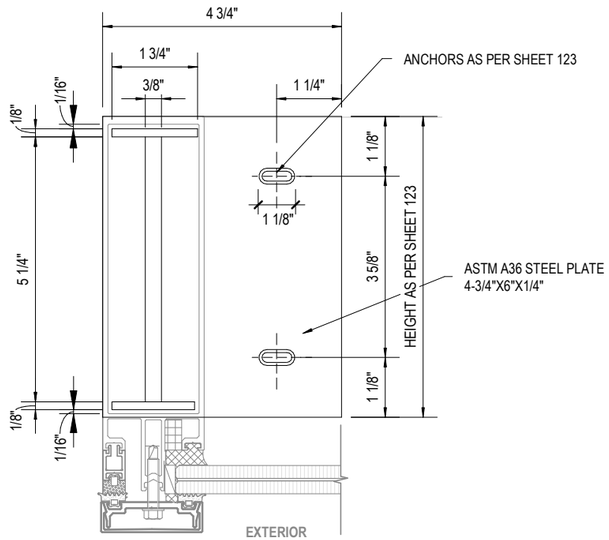

PLAN VIEW

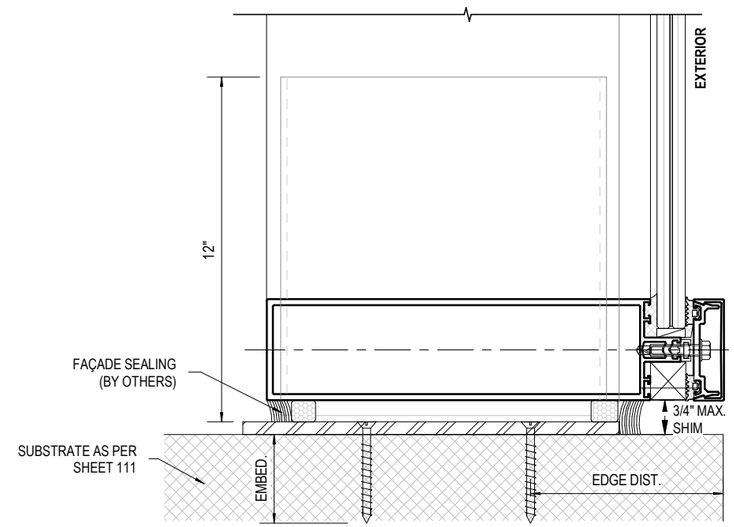

SIDE VIEW

1 / 121 **F-BRACKET FOR K431526X (ALTERNATE)**

N.T.S.

MATERIAL: ASTM A36 STEEL
ALLOWABLE DESIGN PRESSURE: +/-110 PSF

NOTE:
- FOR ANCHORS BEING EMBEDDED INTO P.T. SLAB, THE CONTRACTOR SHALL BE RESPONSIBLE FOR TAKING ALL THE SAFETY PRECAUTIONS TO AVOID DAMAGING TO THE EXISTING P.T. TENDONS.

SUBSTRATE	GRADE	ANCHOR TYPE
CONCRETE	3000 PSI	5/8"X 5-1/2" HILTI KWIK HUS-EZ (KH-EZ) ANCHORS WITH MIN. 5" NOMINAL EMBEDMENT, 4" MIN. EDGE DISTANCE INTO MIN. 3000 PSI CONCRETE.
		3/8" X 3" DEWALT SCREW-BOLT+ ANCHORS WITH MIN 2-1/2" NOMINAL EMBEDMENT, 4" MIN. EDGE DISTANCE INTO MIN 3000 PSI CONCRETE.
CONCRETE	6000 PSI	5/8"X 5-1/2" HILTI KWIK HUS-EZ (KH-EZ) ANCHORS WITH MIN. 5" NOMINAL EMBEDMENT, 4" MIN. EDGE DISTANCE INTO MIN. 6000 PSI CONCRETE.
		3/8" X 3" DEWALT SCREW-BOLT+ ANCHORS WITH MIN 2-1/2" NOMINAL EMBEDMENT, 4" MIN. EDGE DISTANCE INTO MIN 6000 PSI CONCRETE.
METAL STRUCTURE	STEEL MIN. A36 ALUMINUM MIN. 6063-T6	3/8" DIA. MACHINE SCREW (GR.5) INTO METAL SUBSTRATE W/ MIN. 3 THREAD PENETRATION BEYOND METAL THICKNESS, 1" MIN. EDGE DISTANCE AND 1-1/2" MIN. SPACING.

JAVAD AHMAD PE, inc
7875 NW 12 Street, Suite 102
Doral, FL 33126
Ph: (305) 424-8001
support@ja-pe.com
CONSULTING • STRUCTURAL DESIGN • FACADES • BUILDING ENVELOPE • SYSTEM DESIGN • PRODUCT APPROVALS

PROJECT :

MB-SR50N STOREFRONT SYSTEM

CLIENT :

ALUPROF SA

UL.WARSZAWSKA 153, 43-300
BIELSKO-BIALA, POLAND

REVISION

No.	DATE	BY	DESCRIPTION

date:	12-20-2024
scale:	N/A
drawn by:	MK
check by:	BS
Drawing no.	JA-1985-24

Eng: JAVAD AHMAD, PE
CIVIL FLA. PE # 70592 - C.A.N.34254

JAVAD AHMAD LICENSE No 70592 STATE OF FLORIDA PROFESSIONAL ENGINEER

12-20-2024

ALTERNATIVE T-BRACKET DETAIL

FL# 46591

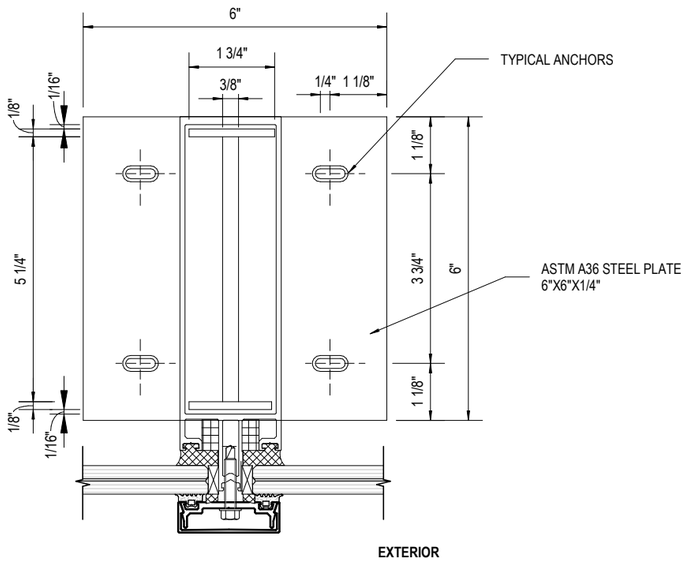

PLAN VIEW

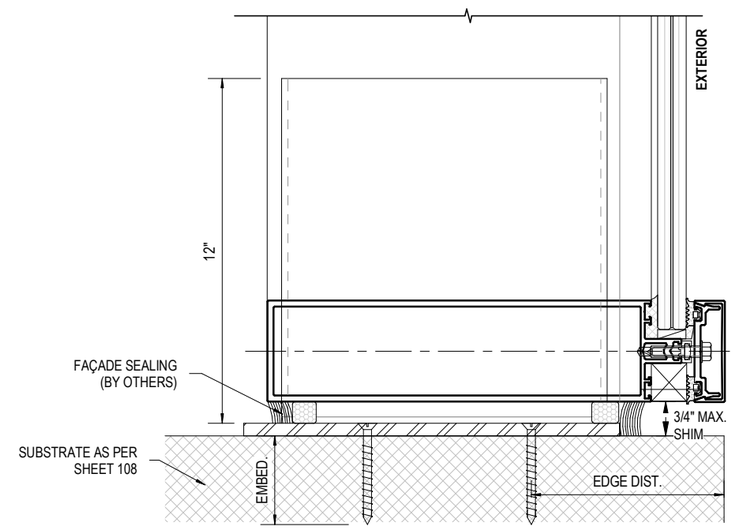

SIDE VIEW

1/122 **T-BRACKET FOR K431526X (ALTERNATE)**
N.T.S.

MATERIAL: ASTM A36 STEEL
ALLOWABLE DESIGN PRESSURE: +/-70 PSF

NOTE:
- FOR ANCHORS BEING EMBEDDED INTO P.T. SLAB, THE CONTRACTOR SHALL BE RESPONSIBLE FOR TAKING ALL THE SAFETY PRECAUTIONS TO AVOID DAMAGING TO THE EXISTING P.T. TENDONS.

SUBSTRATE	GRADE	ANCHOR TYPE
CONCRETE	3000 PSI	5/8"X 5-1/2" HILTI KWIK HUS-EZ (KH-EZ) ANCHORS WITH MIN. 5" NOMINAL EMBEDMENT, 4" MIN. EDGE DISTANCE INTO MIN. 3000 PSI CONCRETE.
		3/8" X 3" DEWALT SCREW-BOLT+ ANCHORS WITH MIN 2-1/2" NOMINAL EMBEDMENT, 4" MIN. EDGE DISTANCE INTO MIN 3000 PSI CONCRETE.
CONCRETE	6000 PSI	5/8"X 5-1/2" HILTI KWIK HUS-EZ (KH-EZ) ANCHORS WITH MIN. 5" NOMINAL EMBEDMENT, 4" MIN. EDGE DISTANCE INTO MIN. 6000 PSI CONCRETE.
		3/8" X 3" DEWALT SCREW-BOLT+ ANCHORS WITH MIN 2-1/2" NOMINAL EMBEDMENT, 4" MIN. EDGE DISTANCE INTO MIN 6000 PSI CONCRETE.
METAL STRUCTURE	STEEL MIN. A36 ALUMINUM MIN. 6063-T6	3/8" DIA. MACHINE SCREW (GR.5) INTO METAL SUBSTRATE W/ MIN. 3 THREAD PENETRATION BEYOND METAL THICKNESS, 1" MIN. EDGE DISTANCE AND 1-1/2" MIN. SPACING.

JAVAD AHMAD PE, inc
7875 NW 12 Street, Suite 102
Doral, FL 33126
Ph: (305) 424-8001
support@ja-pe.com
CONSULTING • STRUCTURAL DESIGN • FACADES • BUILDING ENVELOPE • SYSTEM DESIGN • PRODUCT APPROVALS

PROJECT :
MB-SR50N STOREFRONT SYSTEM

CLIENT :
ALUPROF SA

UL.WARSZAWSKA 153, 43-300
BIELSKO-BIALA, POLAND

REVISION

No.	DATE	BY	DESCRIPTION

date:	12-20-2024
scale:	N/A
drawn by:	MK
check by:	BS
Drawing no.	JA-1985-24

Eng: JAVAD AHMAD, PE
CIVIL FLA. PE # 70592 - C.A.N.34254

JAVAD AHMAD LICENSE No 70592 STATE OF FLORIDA PROFESSIONAL ENGINEER

12-20-2024

F-BRACKET ANCHORAGE DETAILS

FL# 46591

F-BRACKET ANCHORAGE DETAIL									
SL NO:	MULLION	MULLION DEPTH (IN.)	F-BRACKET SIZE		TYPE	ANCHOR	SUBSTRATE	MIN. EMBEDMENT (IN.)	MIN. EDGE DISTANCE (IN.)
			WIDTH (IN.)	DEPTH (IN.)					
1	J12 & J13	5-1/4	4-3/4	5-1/4	A	(2) 5/8"X 5-1/2" HILTI KWIK HUS-EZ (KH-EZ)	MIN. 3000 PSI CONCRETE	5" NOMINAL	5
					B	(2) 3/8" X 3" DEWALT SCREW-BOLT+	MIN. 3000 PSI CONCRETE	5" NOMINAL	5
					C	(2) 3/8" DIA. MACHINE SCREW (GR.5)	STEEL MIN. A36 &ALUMINUM MIN. 6063-T6	3 - THREADS MIN. PENETRATION	1
2	J14	6	4-3/4	6	A	(2) 5/8"X 5-1/2" HILTI KWIK HUS-EZ (KH-EZ)	MIN. 3000 PSI CONCRETE	5" NOMINAL	5
					B	(2) 3/8" X 3" DEWALT SCREW-BOLT+	MIN. 3000 PSI CONCRETE	5" NOMINAL	5
					C	(2) 3/8" DIA. MACHINE SCREW (GR.5)	STEEL MIN. A36 &ALUMINUM MIN. 6063-T6	3 - THREADS MIN. PENETRATION	1
3	J15	6-3/4	4-3/4	6-3/4	A	(2) 5/8"X 5-1/2" HILTI KWIK HUS-EZ (KH-EZ)	MIN. 3000 PSI CONCRETE	5" NOMINAL	5
					B	(2) 3/8" X 3" DEWALT SCREW-BOLT+	MIN. 3000 PSI CONCRETE	5" NOMINAL	5
					C	(2) 3/8" DIA. MACHINE SCREW (GR.5)	STEEL MIN. A36 &ALUMINUM MIN. 6063-T6	3 - THREADS MIN. PENETRATION	1
4	J16	7-1/2	4-3/4	7-1/2	A	(2) 5/8"X 5-1/2" HILTI KWIK HUS-EZ (KH-EZ)	MIN. 3000 PSI CONCRETE	5" NOMINAL	5
					B	(2) 3/8" X 3" DEWALT SCREW-BOLT+	MIN. 3000 PSI CONCRETE	5" NOMINAL	5
					C	(2) 3/8" DIA. MACHINE SCREW (GR.5)	STEEL MIN. A36 &ALUMINUM MIN. 6063-T6	3 - THREADS MIN. PENETRATION	1
5	J17	8-1/4	4-3/4	8-1/4	A	(3) 5/8"X 5-1/2" HILTI KWIK HUS-EZ (KH-EZ)	MIN. 3000 PSI CONCRETE	5" NOMINAL	5
					B	(3) 3/8" X 3" DEWALT SCREW-BOLT+	MIN. 3000 PSI CONCRETE	5" NOMINAL	5
					C	(3) 3/8" DIA. MACHINE SCREW (GR.5)	STEEL MIN. A36 &ALUMINUM MIN. 6063-T6	3 - THREADS MIN. PENETRATION	1
6	J18	9	4-3/4	9	A	(3) 5/8"X 5-1/2" HILTI KWIK HUS-EZ (KH-EZ)	MIN. 3000 PSI CONCRETE	5" NOMINAL	5
					B	(3) 3/8" X 3" DEWALT SCREW-BOLT+	MIN. 3000 PSI CONCRETE	5" NOMINAL	5
					C	(3) 3/8" DIA. MACHINE SCREW (GR.5)	STEEL MIN. A36 &ALUMINUM MIN. 6063-T6	3 - THREADS MIN. PENETRATION	1
7	J19	10-3/4	4-3/4	10-3/4	A	(3) 5/8"X 5-1/2" HILTI KWIK HUS-EZ (KH-EZ)	MIN. 3000 PSI CONCRETE	5" NOMINAL	5
					B	(3) 3/8" X 3" DEWALT SCREW-BOLT+	MIN. 3000 PSI CONCRETE	5" NOMINAL	5
					C	(3) 3/8" DIA. MACHINE SCREW (GR.5)	STEEL MIN. A36 &ALUMINUM MIN. 6063-T6	3 - THREADS MIN. PENETRATION	1
8	J20	12-1/4	4-3/4	12-1/4	A	(3) 5/8"X 5-1/2" HILTI KWIK HUS-EZ (KH-EZ)	MIN. 3000 PSI CONCRETE	5" NOMINAL	5
					B	(3) 3/8" X 3" DEWALT SCREW-BOLT+	MIN. 3000 PSI CONCRETE	5" NOMINAL	5
					C	(3) 3/8" DIA. MACHINE SCREW (GR.5)	STEEL MIN. A36 &ALUMINUM MIN. 6063-T6	3 - THREADS MIN. PENETRATION	1

JAVAD AHMAD PE, inc
7875 NW 12 Street, Suite 102
Doral, FL 33126
Ph: (305) 424-8001
support@ja-pe.com
CONSULTING • STRUCTURAL DESIGN • FACADES • BUILDING ENVELOPE • SYSTEM DESIGN • PRODUCT APPROVALS

PROJECT :

MB-SR50N STOREFRONT SYSTEM

CLIENT :

ALUPROF SA

UL.WARSZAWSKA 153, 43-300
BIELSKO-BIALA, POLAND

REVISION

No.	DATE	BY	DESCRIPTION

date:	12-20-2024
scale:	N/A
drawn by:	MK
check by:	BS
Drawing no.	JA-1985-24

Eng: JAVAD AHMAD, PE
CIVIL FLA. PE # 70592 - C.A.N.34254

JAVAD AHMAD LICENSE No 70592 STATE OF FLORIDA PROFESSIONAL ENGINEER

12-20-2024

T-BRACKET ANCHORAGE DETAILS

FL# 46591

T - BRACKET ANCHORAGE DETAIL									
SL NO:	MULLION	MULLION DEPTH (IN.)	T - BRACKET SIZE		TYPE	ANCHOR	SUBSTRATE	MIN. EMBEDMENT (IN.)	MIN. EDGE DISTANCE (IN.)
			WIDTH (IN.)	DEPTH (IN.)					
1	M9 & M10	5-1/4	7	5-1/4	A	(4) 5/8"X 5-1/2" HILTI KWIK HUS-EZ (KH-EZ)	MIN. 3000 PSI CONCRETE	5" NOMINAL	5
					B	(4) 3/8" X 3" DEWALT SCREW-BOLT+	MIN. 3000 PSI CONCRETE	5" NOMINAL	5
					C	(4) 3/8" DIA. MACHINE SCREW (GR.5)	STEEL MIN. A36 &ALUMINUM MIN. 6063-T6	3 - THREADS MIN. PENETRATION	1
2	M11	6	7	6	A	(4) 5/8"X 5-1/2" HILTI KWIK HUS-EZ (KH-EZ)	MIN. 3000 PSI CONCRETE	5" NOMINAL	5
					B	(4) 3/8" X 3" DEWALT SCREW-BOLT+	MIN. 3000 PSI CONCRETE	5" NOMINAL	5
					C	(4) 3/8" DIA. MACHINE SCREW (GR.5)	STEEL MIN. A36 &ALUMINUM MIN. 6063-T6	3 - THREADS MIN. PENETRATION	1
3	M12	6-3/4	7	6-3/4	A	(4) 5/8"X 5-1/2" HILTI KWIK HUS-EZ (KH-EZ)	MIN. 3000 PSI CONCRETE	5" NOMINAL	5
					B	(4) 3/8" X 3" DEWALT SCREW-BOLT+	MIN. 3000 PSI CONCRETE	5" NOMINAL	5
					C	(4) 3/8" DIA. MACHINE SCREW (GR.5)	STEEL MIN. A36 &ALUMINUM MIN. 6063-T6	3 - THREADS MIN. PENETRATION	1
4	M13	7-1/2	7	7-1/2	A	(4) 5/8"X 5-1/2" HILTI KWIK HUS-EZ (KH-EZ)	MIN. 3000 PSI CONCRETE	5" NOMINAL	5
					B	(4) 3/8" X 3" DEWALT SCREW-BOLT+	MIN. 3000 PSI CONCRETE	5" NOMINAL	5
					C	(4) 3/8" DIA. MACHINE SCREW (GR.5)	STEEL MIN. A36 &ALUMINUM MIN. 6063-T6	3 - THREADS MIN. PENETRATION	1
5	M14	8-1/4	7	8-1/4	A	(4) 5/8"X 5-1/2" HILTI KWIK HUS-EZ (KH-EZ)	MIN. 3000 PSI CONCRETE	5" NOMINAL	5
					B	(4) 3/8" X 3" DEWALT SCREW-BOLT+	MIN. 3000 PSI CONCRETE	5" NOMINAL	5
					C	(4) 3/8" DIA. MACHINE SCREW (GR.5)	STEEL MIN. A36 &ALUMINUM MIN. 6063-T6	3 - THREADS MIN. PENETRATION	1
6	M15 & M16	9	7	9	A	(4) 5/8"X 5-1/2" HILTI KWIK HUS-EZ (KH-EZ)	MIN. 3000 PSI CONCRETE	5" NOMINAL	5
					B	(4) 3/8" X 3" DEWALT SCREW-BOLT+	MIN. 3000 PSI CONCRETE	5" NOMINAL	5
					C	(4) 3/8" DIA. MACHINE SCREW (GR.5)	STEEL MIN. A36 &ALUMINUM MIN. 6063-T6	3 - THREADS MIN. PENETRATION	1

JAVAD AHMAD PE, inc

7875 NW 12 Street, Suite 102
Doral, FL 33126
Ph: (305) 424-8001
support@ja-pe.com

CONSULTING • STRUCTURAL DESIGN • FACADES • BUILDING ENVELOPE • SYSTEM DESIGN • PRODUCT APPROVALS

PROJECT :

MB-SR50N STOREFRONT SYSTEM

CLIENT :

ALUPROF SA

UL.WARSZAWSKA 153, 43-300
BIELSKO-BIALA, POLAND

REVISION

No.	DATE	BY	DESCRIPTION

date:	12-20-2024
scale:	N/A
drawn by:	MK
check by:	BS
Drawing no.	JA-1985-24

Eng: JAVAD AHMAD, PE
CIVIL FLA. PE # 70592 - C.A.N.34254

JAVAD AHMAD LICENSE No 70592 STATE OF FLORIDA PROFESSIONAL ENGINEER

12-20-2024

PARTS LIST

FL# 46591

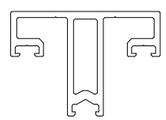
1 K417911X

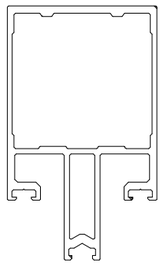
2 K431592X

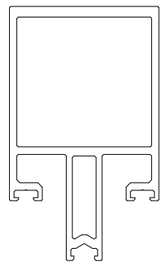
3 K431524X

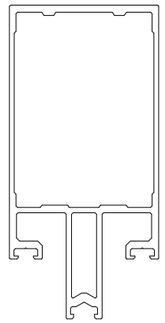
4 K431593X

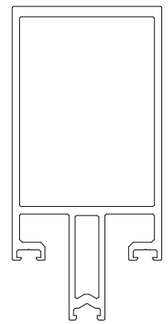
5 K430482X

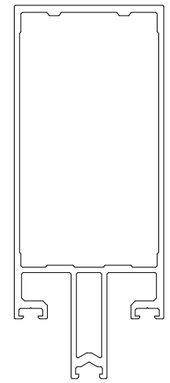
6 K431594X

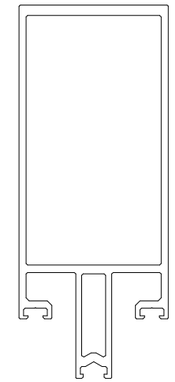
7 K430783X

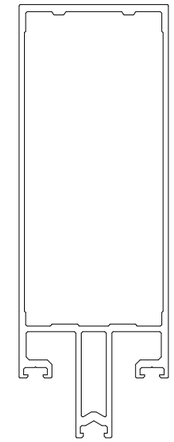
8 K431595X

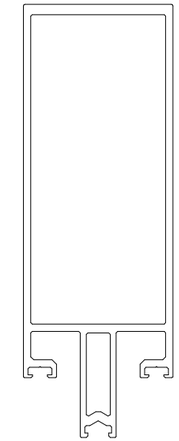
9 K430484X

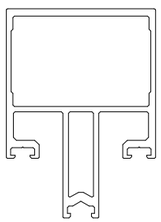
10 K431591X

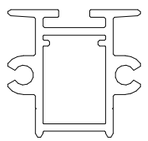
11 K432145X

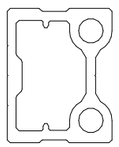
12 K432139X

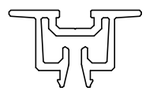
13 K432144X

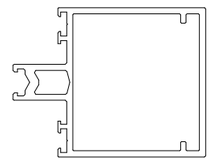
14 K432151X

15 K417892X

16 K417890X

17 K417891X

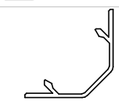
18 K417942X

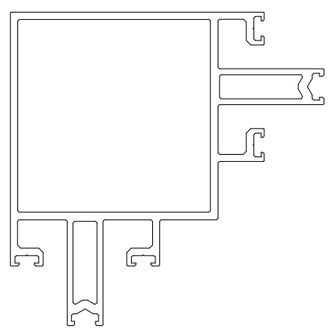
19 K431550X

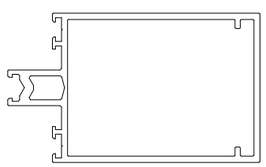
20 K432152X

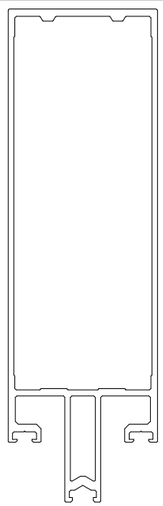
22 K431596X

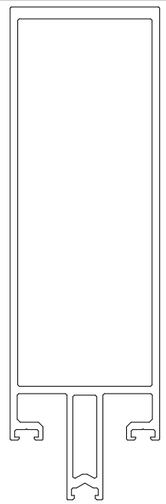
23 K431525X

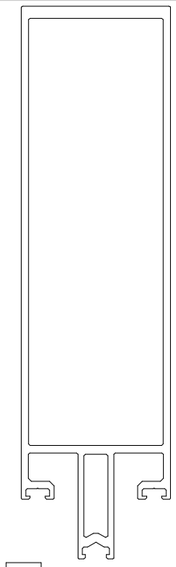
24 K431526X

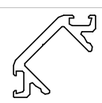
25 KA31831X

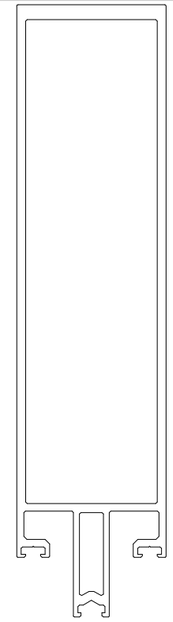
26 K431527X

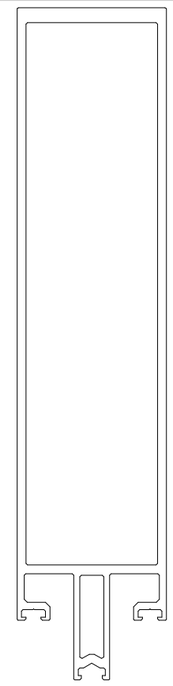
27 K431528X

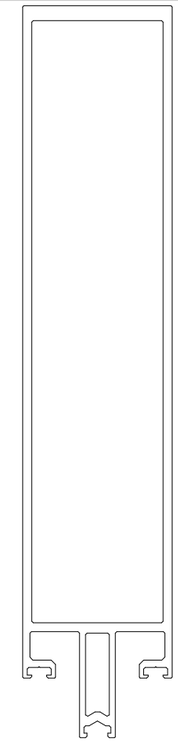
28 K431529X

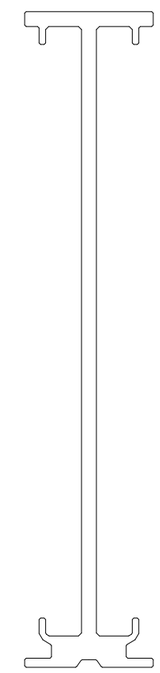
29 K434091X

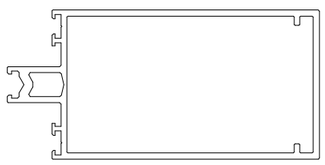
21 K432153X

JAVAD AHMAD PE, inc

7875 NW 12 Street, Suite 102
Doral, FL 33126
Ph: (305) 424-8001
support@ja-pe.com

CONSULTING • STRUCTURAL DESIGN • FACADES • BUILDING ENVELOPE • SYSTEM DESIGN • PRODUCT APPROVALS

PROJECT :

MB-SR50N STOREFRONT SYSTEM

CLIENT :

ALUPROF SA

UL.WARSZAWSKA 153, 43-300
BIELSKO-BIALA, POLAND

REVISION

No.	DATE	BY	DESCRIPTION

date:	12-20-2024
scale:	N/A
drawn by:	MK
check by:	BS
Drawing no.	JA-1985-24

Eng: JAVAD AHMAD, PE
CIVIL FLA. PE # 70592 - C.A.N.34254

JAVAD AHMAD LICENSE No 70592 STATE OF FLORIDA PROFESSIONAL ENGINEER

12-20-2024

PARTS LIST

FL# 46591

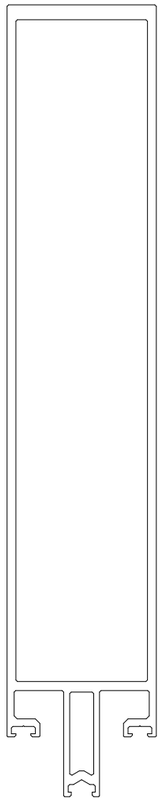

30 K434086X

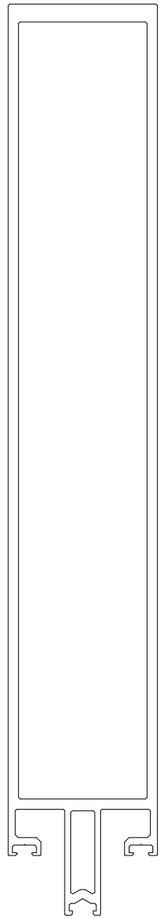

32 K434088X

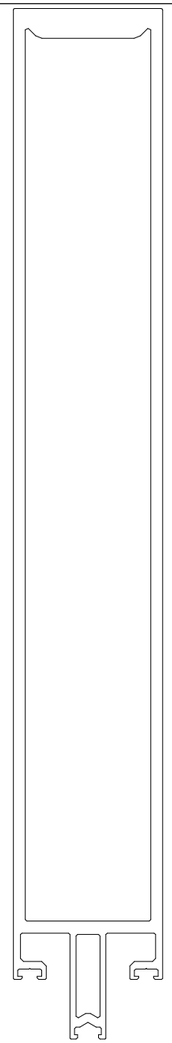

34 K431569X

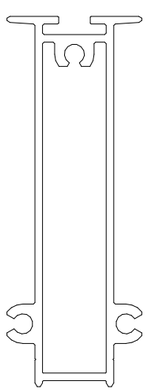

31 K432147X

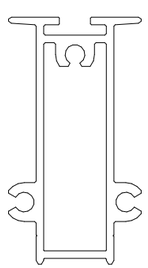

33 K432146X

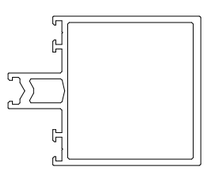

35 K431542X

36 K431531X

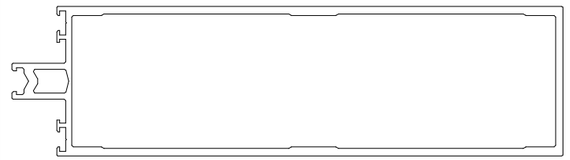

37 K431532X

38 K432156X

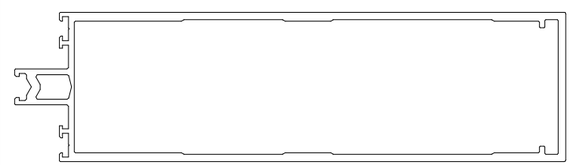

39 K432157X

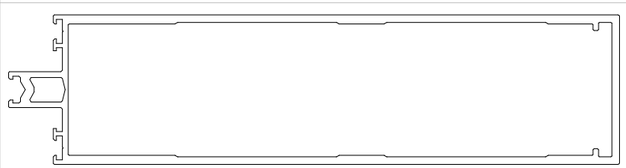

40 K432158X

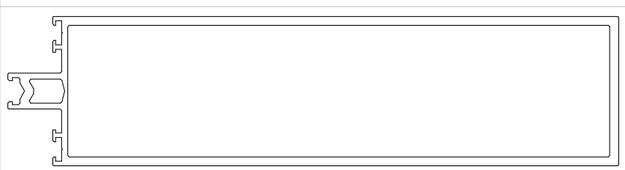

41 K431533X

42 K430493X

43 K430492X

44 K432155X

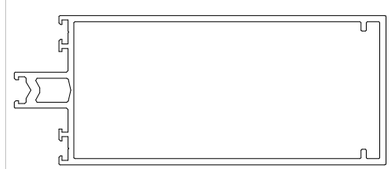

45 K432154X

46 K430491X

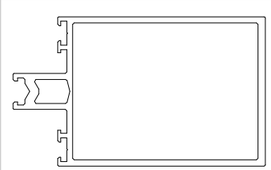

47 K431543X

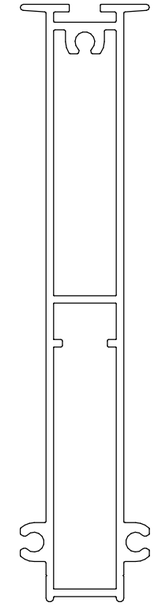

48 K432149X

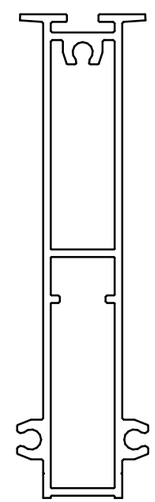

49 K432148X

JAVAD AHMAD PE, inc

7875 NW 12 Street, Suite 102
Doral, FL 33126
Ph: (305) 424-8001
support@ja-pe.com

CONSULTING • STRUCTURAL DESIGN • FACADES • BUILDING ENVELOPE • SYSTEM DESIGN • PRODUCT APPROVALS

PROJECT :

MB-SR50N STOREFRONT SYSTEM

CLIENT :

ALUPROF SA

UL.WARSZAWSKA 153, 43-300
BIELSKO-BIALA, POLAND

REVISION

No.	DATE	BY	DESCRIPTION

date:	12-20-2024
scale:	N/A
drawn by:	MK
check by:	BS
Drawing no.	JA-1985-24

Eng: JAVAD AHMAD, PE
CIVIL FLA. PE # 70592 - C.A.N.34254

JAVAD AHMAD LICENSE No 70592 STATE OF FLORIDA PROFESSIONAL ENGINEER

12-20-2024

PARTS LIST

FL# 46591

50 K431821X

51 K431822X

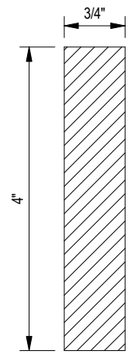

52 STEEL FLAT BAR 100X20

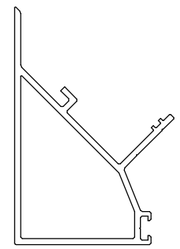

53 K434056X

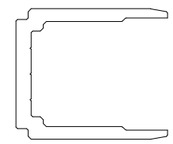

54 K4315530

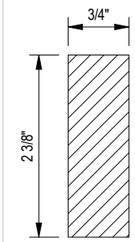

55 STEEL FLAT BAR 80X20

56 87252721

57 80375311

60 80315014

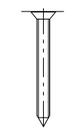

58 87222409

59 80371255

61 87252405

62 120542

63 120485

64 87252403

65 87252503

66 009013

67 K417920X

68 K431831X

69 K417916X

79 120958

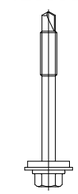

78 80371214

70 7415P609

71 7415P608

72 120480

73 80371208

74 K417914X

75 K434037X

76 120482

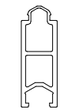

77 009014

JAVAD AHMAD PE, inc

7875 NW 12 Street, Suite 102
Doral, FL 33126
Ph: (305) 424-8001
support@ja-pe.com

CONSULTING • STRUCTURAL DESIGN • FACADES • BUILDING ENVELOPE • SYSTEM DESIGN • PRODUCT APPROVALS

PROJECT :

MB-SR50N STOREFRONT SYSTEM

CLIENT :

ALUPROF SA

UL.WARSZAWSKA 153, 43-300
BIELSKO-BIALA, POLAND

REVISION			
No.	DATE	BY	DESCRIPTION

date:	12-20-2024
scale:	N/A
drawn by:	MK
check by:	BS
Drawing no.	JA-1985-24

Eng: JAVAD AHMAD, PE
CIVIL FLA. PE # 70592 - C.A.N.34254

12-20-2024

BILL OF MATERIALS

FL# 46591

BILL OF MATERIALS

ITEM NO.	PART NO.	REQD.	DESCRIPTION	MATERIAL	MANF./SUPPLIER/REMARKS
1	K417911X	AS REQD.	JAMB STILE	AW-6060 T66	–
2	K431592X	AS REQD.	JAMB STILE	AW-6060 T66	–
3	K431524X	AS REQD.	JAMB STILE	AW-6060 T66	–
4	K431593X	AS REQD.	JAMB STILE	AW-6060 T66	–
5	K430482X	AS REQD.	JAMB STILE	AW-6060 T66	–
6	K431594X	AS REQD.	JAMB STILE	AW-6060 T66	–
7	K430783X	AS REQD.	JAMB STILE	AW-6060 T66	–
8	K431595X	AS REQD.	JAMB STILE	AW-6060 T66	–
9	K430484X	AS REQD.	JAMB STILE	AW-6060 T66	–
10	K431591X	AS REQD.	JAMB STILE	AW-6060 T66	–
11	K432145X	AS REQD.	INTERMEDIATE STILE	AW-6060 T66	–
12	K432139X	AS REQD.	TRANSOM STILE	AW-6060 T66	–
13	K432144X	AS REQD.	–	AW-6060 T66	–
14	K432151X	AS REQD.	FRAME HEAD / SILL	AW-6060 T66	–
15	K417892X	AS REQD.	COVER PLATE	AW-6060 T66	–
16	K417890X	AS REQD.	PRESSURE PLATE	AW-6060 T66	–
17	K417891X	AS REQD.	COVER PLATE	AW-6060 T66	–
18	K417942X	AS REQD.	COVER PLATE	AW-6060 T66	–
19	K431550X	AS REQD.	JAMB STILE	AW-6060 T66	–
20	K432152X	AS REQD.	HEAD / SILL	AW-6060 T66	–
21	K432153X	AS REQD.	FRAME HEAD / SILL	AW-6060 T66	–
22	K431596X	AS REQD.	JAMB STILE	AW-6060 T66	–
23	K431525X	AS REQD.	JAMB STILE	AW-6060 T66	–
24	K431526X	AS REQD.	JAMB STILE	AW-6060 T66	–
25	KA31831X	AS REQD.	COVER PLATE	AW-6060 T66	–
26	K431527X	AS REQD.	JAMB STILE	AW-6060 T66	–
27	K431528X	AS REQD.	JAMB STILE	AW-6060 T66	–
28	K431529X	AS REQD.	JAMB STILE	AW-6060 T66	–
29	K434091X	AS REQD.	INTERMEDIATE STILE	AW-6060 T66	–
30	K434086X	AS REQD.	JAMB STILE	AW-6060 T66	–
31	K432147X	AS REQD.	INTERMEDIATE STILE	AW-6060 T66	–
32	K434088X	AS REQD.	JAMB STILE	AW-6060 T66	–
33	K432146X	AS REQD.	INTERMEDIATE STILE	AW-6060 T66	–
34	K431569X	AS REQD.	JAMB STILE	AW-6060 T66	–
35	K431542X	AS REQD.	FRAME HEAD/SILL	AW-6060 T66	–
36	K431531X	AS REQD.	FRAME HEAD/SILL	AW-6060 T66	–
37	K431532X	AS REQD.	FRAME HEAD/SILL	AW-6060 T66	–
38	K432156X	AS REQD.	FRAME HEAD/SILL	AW-6060 T66	–
39	K432157X	AS REQD.	FRAME HEAD/SILL	AW-6060 T66	–

JAVAD AHMAD PE, inc

7875 NW 12 Street, Suite 102
Doral, FL 33126
Ph: (305) 424-8001
support@ja-pe.com

CONSULTING • STRUCTURAL DESIGN • FACADES • BUILDING ENVELOPE • SYSTEM DESIGN • PRODUCT APPROVALS

PROJECT :

MB-SR50N STOREFRONT SYSTEM

CLIENT :

ALUPROF SA

UL.WARSZAWSKA 153, 43-300
BIELSKO-BIALA, POLAND

REVISION

No.	DATE	BY	DESCRIPTION

date:	12-20-2024
scale:	N/A
drawn by:	MK
check by:	BS
Drawing no.	JA-1985-24

Eng: JAVAD AHMAD, PE
CIVIL FLA. PE # 70592 - C.A.N.34254

JAVAD AHMAD LICENSE No 70592 STATE OF FLORIDA PROFESSIONAL ENGINEER

12-20-2024

BILL OF MATERIALS

FL# 46591

BILL OF MATERIALS

ITEM NO.	PART NO.	REQD.	DESCRIPTION	MATERIAL	MANF./SUPPLIER/REMARKS
40	K432158X	AS REQD.	FRAME HEAD/SILL	AW-6060 T66	–
41	K431533X	AS REQD.	FRAME HEAD/SILL	AW-6060 T66	–
42	K430493X	AS REQD.	FRAME HEAD/SILL	AW-6060 T66	–
43	K430492X	AS REQD.	FRAME HEAD/SILL	AW-6060 T66	–
44	K432155X	AS REQD.	FRAME HEAD/SILL	AW-6060 T66	–
45	K432154X	AS REQD.	FRAME HEAD/SILL	AW-6060 T66	–
46	K430491X	AS REQD.	FRAME HEAD/SILL	AW-6060 T66	–
47	K431543X	AS REQD.	FRAME HEAD/SILL	AW-6060 T66	–
48	K432149X	AS REQD.	INTERMEDIATE STILE	AW-6060 T66	–
49	K432148X	AS REQD.	INTERMEDIATE STILE	AW-6060 T66	–
50	K431821X	AS REQD.	COVER PLATE	AW-6060 T66	–
51	K431822X	AS REQD.	COVER PLATE	AW-6060 T66	–
52	–	AS REQD.	STEEL REINFORCEMENT	SS GRADE -S235	STEEL FLAT BAR 4" X 3/4" (FULLLENGTH)
53	K434056X	AS REQD.	45 CORNER ADAPTER PROFILE	AW-6060 T66	–
54	K4315530	AS REQD.	SHEAR BLOCK	AW-6060 T66	–
55	–	AS REQD.	STEEL REINFORCEMENT	SS GRADE -S235	STEEL FLAT BAR 2-3/8" X 3/4" (FULLLENGTH)
56	87252721	AS REQD.	ASSEMBLY SCREW	SS GRADE -A2	–
57	80375311	AS REQD.	ASSEMBLY SCREW	SS GRADE -A1	–
58	87222409	AS REQD.	ASSEMBLY SCREW	SS GRADE -A2	–
59	80371255	AS REQD.	ASSEMBLY SCREW	SS GRADE -A2	–
60	80315014	AS REQD.	ASSEMBLY SCREW	SS GRADE -A2	–
61	87252405	AS REQD.	ASSEMBLY SCREW	–	–
62	120542	AS REQD.	GASKET	EPDM	–
63	120485	AS REQD.	GASKET	EPDM	–
64	87252403	AS REQD.	ASSEMBLY SCREW	–	–
65	87252503	AS REQD.	ASSEMBLY SCREW	–	–
66	9013	AS REQD.	–	AW-6060 T66	–
67	K417920X	AS REQD.	–	AW-6060 T66	–
68	K431831X	AS REQD.	–	AW-6060 T66	–
69	K417916X	AS REQD.	–	AW-6060 T66	–
70	7415P609	AS REQD.	ASSEMBLY SCREW	–	–
71	7415P608	AS REQD.	ASSEMBLY SCREW	–	–
72	120480	AS REQD.	GASKET EPDM	–	–
73	80371208	AS REQD.	ASSEMBLY SCREW	SS GRADE -A2	–
74	K417914X	AS REQD.	–	AW-6060 T66	–
75	K434037X	AS REQD.	–	AW-6060 T66	–
76	120482	AS REQD.	GASKET	EPDM	–
77	9014	AS REQD.	–	–	–
78	80371214	AS REQD.	–	–	–
79	120958	AS REQD.	–	–	–

JAVAD AHMAD PE, inc

7875 NW 12 Street, Suite 102
Doral, FL 33126
Ph: (305) 424-8001
support@ja-pe.com

CONSULTING • STRUCTURAL DESIGN • FACADES • BUILDING ENVELOPE • SYSTEM DESIGN • PRODUCT APPROVALS

PROJECT :

MB-SR50N STOREFRONT SYSTEM

CLIENT :

ALUPROF SA

UL.WARSZAWSKA 153, 43-300
BIELSKO-BIALA, POLAND

REVISION

No.	DATE	BY	DESCRIPTION

date:	12-20-2024
scale:	N/A
drawn by:	MK
check by:	BS
Drawing no.	JA-1985-24

Eng: JAVAD AHMAD, PE
CIVIL FLA. PE # 70592 - C.A.N.34254

JAVAD AHMAD LICENSE No 70592 STATE OF FLORIDA PROFESSIONAL ENGINEER

12-20-2024

FRAME ASSEMBLY DETAILS

FL# 46591

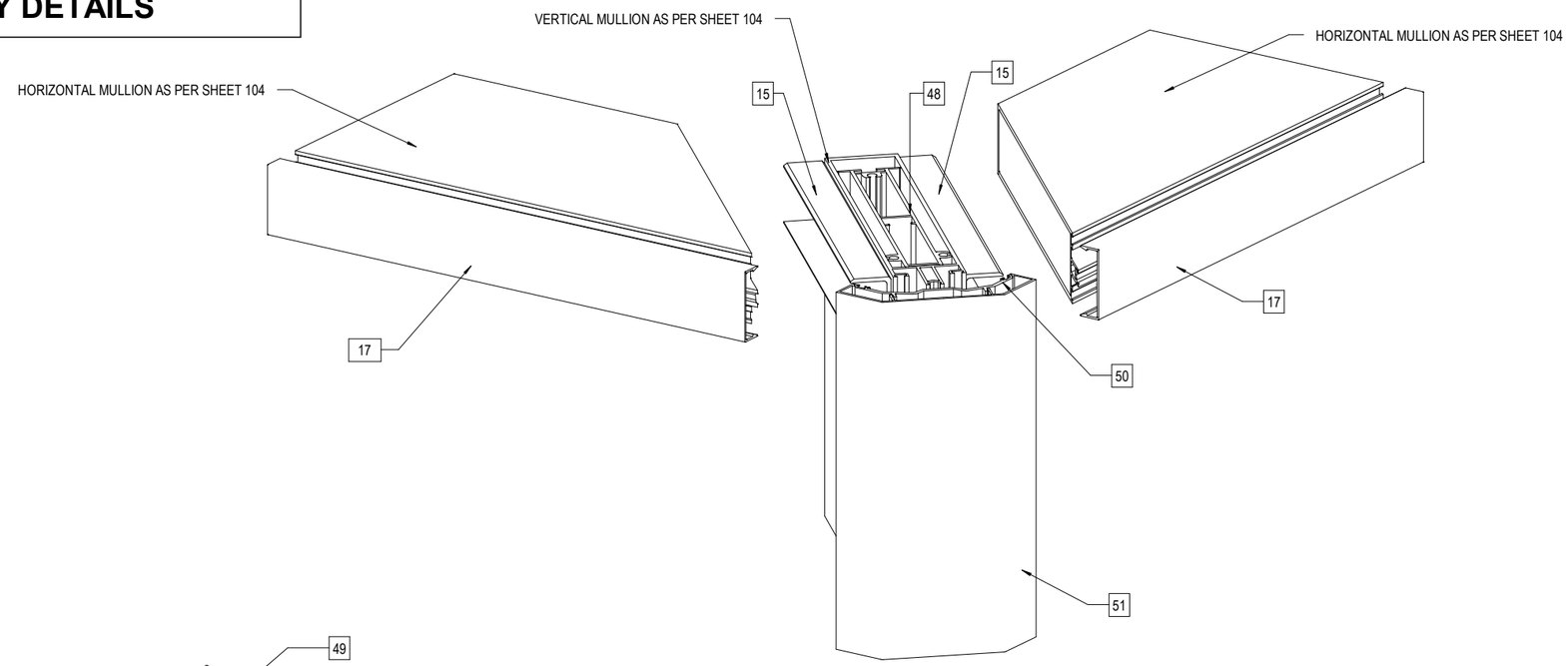

HORIZONTAL TO VERTICAL CORNER MULLION CONNECTION

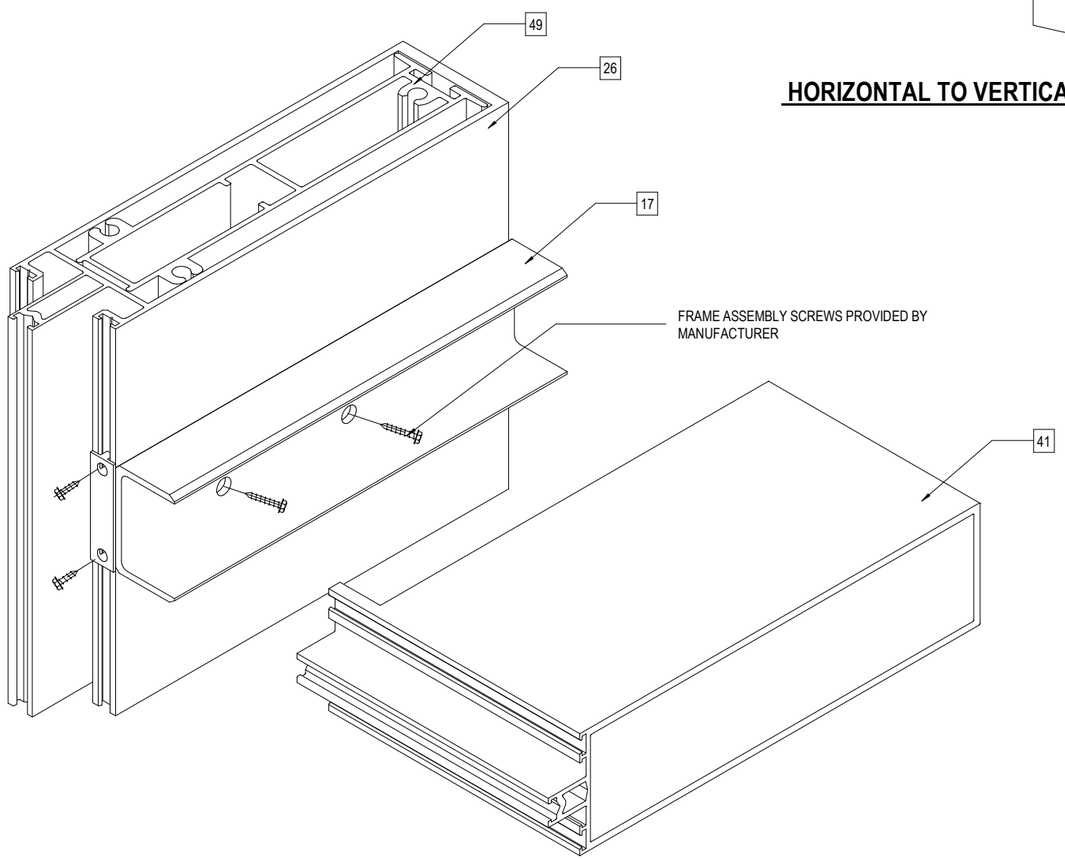

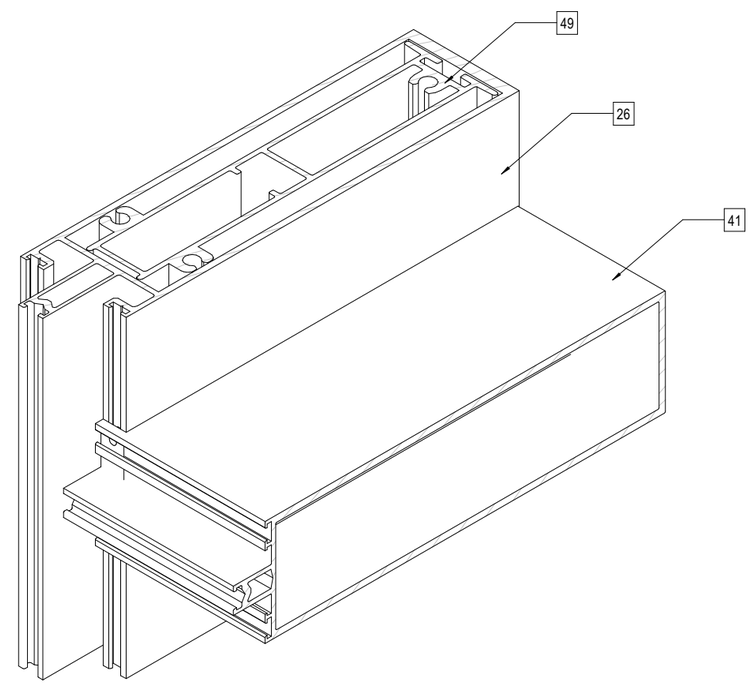

TYPICAL HORIZONTAL TO VERTICAL MULLION CONNECTION

JAVAD AHMAD PE, inc

7875 NW 12 Street, Suite 102
Doral, FL 33126
Ph: (305) 424-8001
support@ja-pe.com

CONSULTING • STRUCTURAL DESIGN • FACADES • BUILDING ENVELOPE • SYSTEM DESIGN • PRODUCT APPROVALS

PROJECT :

MB-SR50N STOREFRONT SYSTEM

CLIENT :

ALUPROF SA

UL.WARSZAWSKA 153, 43-300
BIELSKO-BIALA, POLAND

REVISION

No.	DATE	BY	DESCRIPTION

date:	12-20-2024
scale:	N/A
drawn by:	MK
check by:	BS
Drawing no.	JA-1985-24

Eng: JAVAD AHMAD, PE
CIVIL FLA. PE # 70592 - C.A.N.34254

JAVAD AHMAD LICENSE No 70592 STATE OF FLORIDA PROFESSIONAL ENGINEER

12-20-2024