CASEMENT - NON-IMPACT

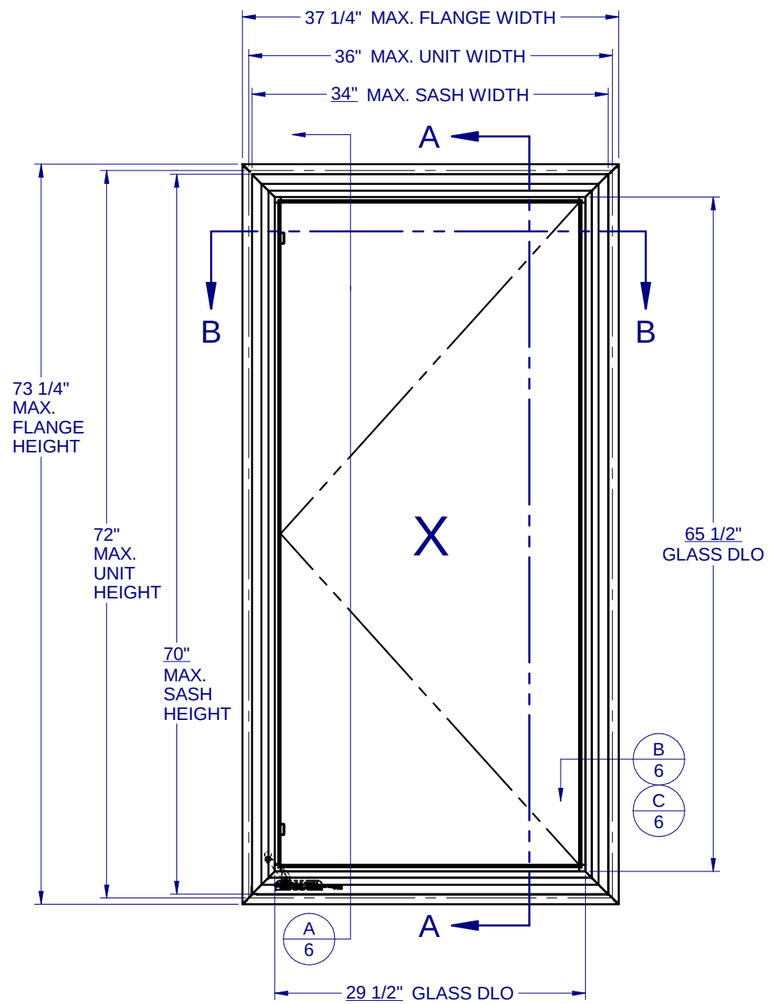

LEFT HINGE SHOWN
RIGHT HINGE - OPPOSITE

GENERAL NOTES:

1. THE PRODUCT SHOWN HEREIN IS DESIGNED AND MANUFACTURED TO COMPLY WITH THE FLORIDA BUILDING CODE (FBC), CURRENT EDITION AND IS RATED FOR USE IN THE HIGH VELOCITY HURRICANE ZONE (HVHZ).

2. GLAZING OPTIONS: (SEE SHEET 2)

3. CONFIGURATIONS: "X". ALL WINDOWS OPEN TO OUTSIDE - LEFT OR RIGHT.

4. DESIGN PRESSURE RATING (SEE SHEET 2):
   -NEGATIVE DESIGN LOADS BASED ON, TESTED PRESSURE AND GLASS TABLES ASTM E-1300.
   -POSITIVE DESIGN LOADS BASED ON, TESTED PRESSURE, WATER INFILTRATION TEST PRESSURE AND GLASS TABLES ASTM E-1300.
   -DESIGN LOADS ARE BASED ON ALLOWABLE STRESS DESIGN, ASD.

5. ANCHORAGE: THE 33 1/3% STRESS INCREASE HAS NOT BEEN USED IN THE DESIGN OF THIS PRODUCT. SEE SHEET 6 FOR ANCHOR DETAILS. WINDLOAD DURATION FACTOR Cd=1.6 WAS USED FOR WOOD ANCHOR CALCULATIONS.

6. NOT APPROVED FOR IMPACT RESISTANCE. IMPACT PROTECTIVE SYSTEM IS REQUIRED IN WIND BORNE DEBRIS REGION.

7. ALL FRAMES AND VENTS FULLY WELDED.

8. THE DESIGNATION X AND O STAND FOR THE FOLLOWING:
   X = OPERABLE SASH

Lucas Turner
2026.08.20
14:07:34
-05'00'

TABLE OF CONTENTS

GENERAL NOTES & ELEVATIONS.....1
COMP. ANALYSIS & GLAZING DETAILS.....2
SECTION VIEWS.....3
BOM & EXTRUSIONS.....4
ANCHOR SCHEDULE & NOTES.....5
INSTALLATION DETAILS.....6

MAX. UNIT SIZE	DESIGN PRESSURE RATING	IMPACT RATING
36" x 72"	SEE COMPARATIVE ANALYSIS CHART, SHEET 2	NONE

CWS
1900 SW 44TH AVE.
OCALA, FLORIDA 34474
WWW.CWS.CC

VCM02

8400 PVC CASEMENT NON-IMPACT

PROPRIETARY AND CONFIDENTIAL
THE INFORMATION CONTAINED IN THIS DRAWING IS THE SOLE PROPERTY OF CUSTOM WINDOW SYSTEMS, INC. ANY REPRODUCTION IN PART OR AS A WHOLE WITHOUT THE WRITTEN PERMISSION OF CUSTOM WINDOW SYSTEMS, INC IS PROHIBITED.

FLORIDA APPROVAL NO.:
4452

LUCAS A. TURNER
LICENSE
No. 58201
STATE OF FLORIDA
PROFESSIONAL ENGINEER

8/17/2026

LUCAS A. TURNER, P.E.
FL PE # 58201
Turner Engineering & Consulting, Inc.
2428 Old Natchez Trc Trl
Camden, TN 38320
PH. 941-380-1574

SHEET DESCRIPTION:
GENERAL NOTES AND ELEVATIONS

DRAWN BY:	DATE:
MCS	8/14/2026
DWG #: CWS-508	REV.: F
SCALE: 1:15	SHEET 1 OF 6

DESIGN PRESSURES (PSF) FOR "X" CONFIGURATION WITH 3/16 ANNEALED IGU GLAZING or 3/16 TEMPERED IGU GLAZING											
Unit	Glass	Unit Height (in.)									
Width (in.)	Type	18	24	30	36	42	48	54	60	66	72
18	A, B	+67.5 / -90.0	+67.5 / -90.0	+67.5 / -90.0	+67.5 / -90.0	+67.5 / -90.0	+67.5 / -90.0	+67.5 / -90.0	+67.5 / -90.0	+67.5 / -90.0	+67.5 / -90.0
24	A, B	+67.5 / -90.0	+67.5 / -90.0	+67.5 / -90.0	+67.5 / -90.0	+67.5 / -90.0	+67.5 / -90.0	+67.5 / -90.0	+67.5 / -90.0	+67.5 / -90.0	+67.5 / -81.0
30	A, B	+67.5 / -90.0	+67.5 / -90.0	+67.5 / -86.4	+67.5 / -86.4	+67.5 / -86.4	+67.5 / -86.4	+67.5 / -86.4	+67.5 / -86.4	+67.5 / -76.2	+67.5 / -68.2
36	A, B	+67.5 / -80.0	+67.5 / -67.5	+61.7 / -61.7	+60.0 / -60.0	+60.0 / -60.0	+60.0 / -60.0	+60.0 / -60.0	+60.0 / -60.0	+60.0 / -60.0	+60.0 / -60.0

NOTE: IF SIZE INTENDED IS NOT SHOWN, USE NEXT LARGER SIZE.

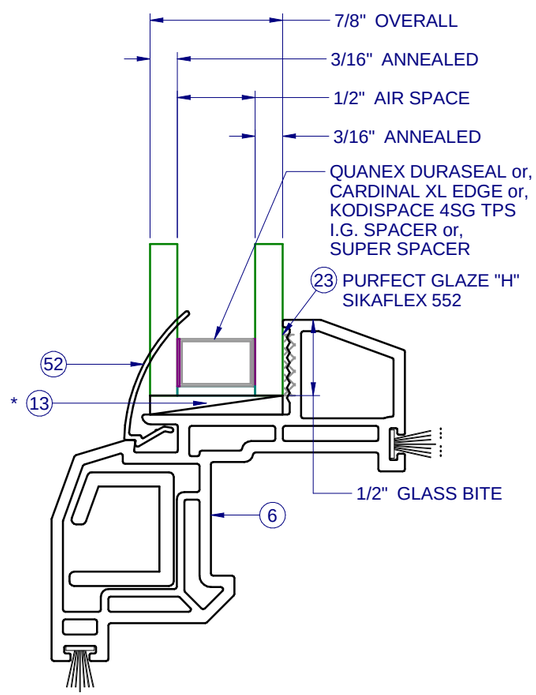

GLASS TYPE A

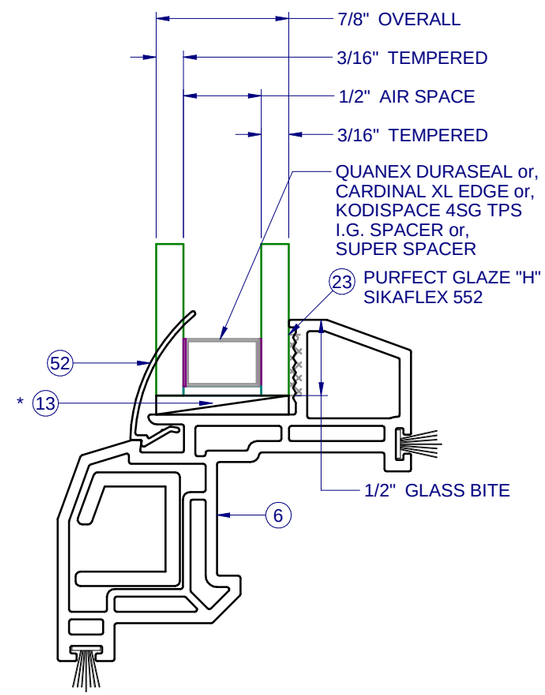

GLASS TYPE B

NOTES:

-GLASS TYPE B AS INDICATED IN THIS APPROVAL IS SGCC CERTIFIED TO ANSI Z97.1 AND CPSC 16 CFR 1201, TO BE FIELD VERIFIED BY PERMANENT ETCHING MARK ON EACH GLASS LITE.

-* SETTING BLOCKS PER FBC 2411.3.3.1

CWS
1900 SW 44TH AVE.
OCALA, FLORIDA 34474
WWW.CWS.CC

VCM02

8400 PVC CASEMENT NON-IMPACT

PROPRIETARY AND CONFIDENTIAL
THE INFORMATION CONTAINED IN THIS DRAWING IS THE SOLE PROPERTY OF CUSTOM WINDOW SYSTEMS, INC. ANY REPRODUCTION IN PART OR AS A WHOLE WITHOUT THE WRITTEN PERMISSION OF CUSTOM WINDOW SYSTEMS, INC IS PROHIBITED.

FLORIDA APPROVAL NO.:
4452

8/17/2026

LUCAS A. TURNER, P.E.
FL PE # 58201
Turner Engineering & Consulting, Inc.
2428 Old Natchez Trc Trl
Camden, TN 38320
PH. 941-380-1574

SHEET DESCRIPTION:
COMPARATIVE ANALYSIS AND GLAZING DETAILS

DRAWN BY:	DATE:
MCS	8/14/2026
DWG #: CWS-508	REV.: F
SCALE: 1:1	SHEET 2 OF 6

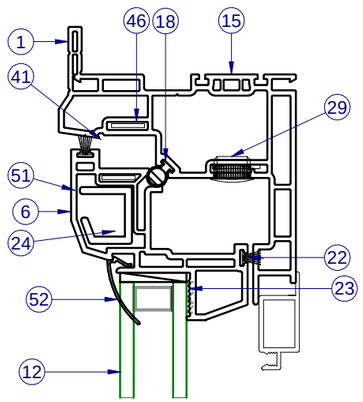

INTERIOR

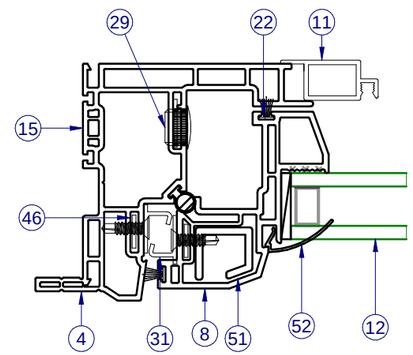

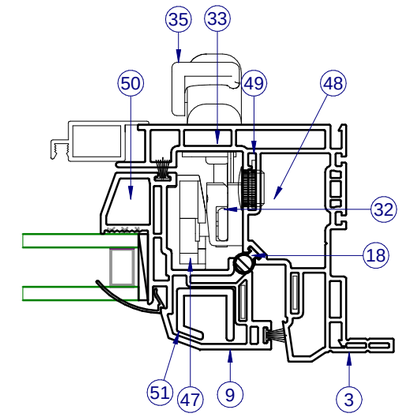

SECTION VIEW B-B

INTERIOR

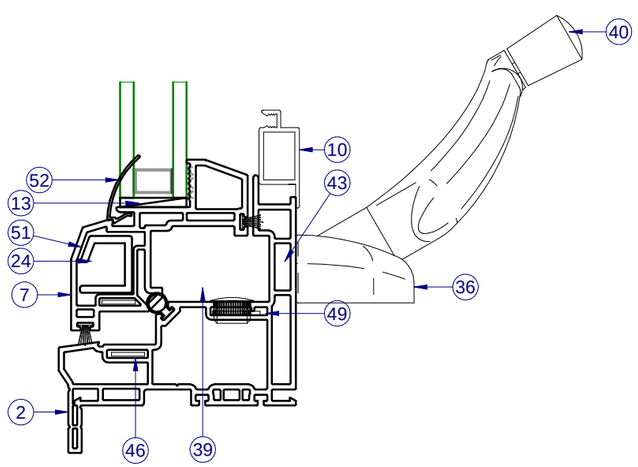

SECTION VIEW A-A

ITEMS NOT SHOWN FOR CLARITY:
14, 16-17, 19-20, 25, 27, 32, 34, 37-38, 42, 44-45, 50

CWS
1900 SW 44TH AVE.
OCALA, FLORIDA 34474
WWW.CWS.CC

VCM02

8400 PVC CASEMENT NON-IMPACT

PROPRIETARY AND CONFIDENTIAL
THE INFORMATION CONTAINED IN THIS DRAWING IS THE SOLE PROPERTY OF CUSTOM WINDOW SYSTEMS, INC. ANY REPRODUCTION IN PART OR AS A WHOLE WITHOUT THE WRITTEN PERMISSION OF CUSTOM WINDOW SYSTEMS, INC IS PROHIBITED.

FLORIDA APPROVAL NO.:
4452

8/17/2026

LUCAS A. TURNER, P.E.
FL PE # 58201
Turner Engineering & Consulting, Inc.
2428 Old Natchez Trc Trl
Camden, TN 38320
PH. 941-380-1574

SHEET DESCRIPTION:
SECTION VIEWS

DRAWN BY:	DATE:
MCS	8/14/2026
DWG #: CWS-508	REV.: F
SCALE: 1:2	SHEET 3 OF 6

PARTS LIST

ITEM	PART #	DESCRIPTION	MATERIAL
1	H-6235	CASEMENT FRAME FIN, FLANGE	PVC
2	H-6235	CASEMENT FRAME FIN, FLANGE	PVC
3	H-6235	CASEMENT FRAME FIN, FLANGE	PVC
4	H-6235	CASEMENT FRAME FIN, FLANGE	PVC
6	H-6234	SASH, CASE., TOP RAIL	PVC
7	H-6234	SASH, CASE., BOT. RAIL	PVC
8	H-6234	SASH, CASE., SIDE RAIL, HINGE	PVC
9	H-6234	SASH, CASE., SIDE RAIL, LOCK	PVC
10	H-1592	SCREEN RAIL, SIDE/BTM	ALUM
11	H-1593	SCREEN RAIL, TOP/SIDE	ALUM
12	GLASS	SEE SHEET 2	
13	P-5612	Setting Block, .12 x 1 x 2	RUBBER
16	P-3195	SCREEN SPRING, NO HOLE TENSION	
17	P-3197	SCREEN CORNER KEY	NYLON
18	P-5573	WSTP., BULB, HOLLOW, T-SLOT, .187 X .358	RUBBER
19	P-3228	SCREEN SPLINE, .155 DIA, BLK	
20		SPACER, SEE SHEET 3	
22	P-3305	Wstp., .270 x .187 High Density	
23		PURFECT GLAZE "H" , SIKAFLEX 552	
24	P-3539	#8 X 3/4" QUAD PH TEK, ZINC, SCREW	
25	P-3565	36" - 18x14 CHARCOAL SCREEN	
26	P-3587	#8 X 1" PH FH TEK 2, SS, SCREW	SS
29	P-5588	CAP PLUG, 1/2" HOLE	NYLON
31	P-3940	SNUBBER, SS, PVC	
32	P-4003	TIE BAR GUIDE, ROTO. HDWE.	SS
33	P-4004	#8-32 X 1/2" PH PH, MS, SS (ROTO HDWE. LOCK)	SS
34	P-4005	SUPPORT PLATE, LOCK, SS, ROTO HDWE. (Use w/ P-4006)	SS
35	P-4006	LOCK, MULTI-POINT, ROTO HDWE., WHITE	SS
36	P-4501	OPERATOR, DUAL ARM, LH (ROTO X-Drive SS)	SS
37	P-4009	TRACK & SLIDER ASSM., ROTO OPER., ROTO HDWE., (13")	SS
38	P-4010	STUD BRKT., ROTO OPER., L.H., ROTO HDWE.	SS
39	P-4012	SHIM, ROTO OPERATOR, ROTO HDWE. (4.8mm)	NYLON
40	P-4503	HANDLE, STD, ROTO OPER, ROTO HDWE. (WHITE)	ZINC
41	P-4018	HINGES (LEFT/RIGHT FOR LEFT OR RIGHT OPEN CASEMENT)	SS
42	P-4020	SUPPORT WASHER, ROTO OPER, ROTO HDWE. (SS)	SS
43	P-4521	# 8-32 x 3/4" Trilobe Truss Head	SS
44	P-4024	GASKET, ROTO OPER., ROTO HDWE., 1/16"	
45	P-4031-P-4040	TIE-BARS, ROTO HDWE. 1-5 LOCKPOINTS, SS (BY OA HGT.)	SS
46	P-4050	REINF. COIL-ALUMINUM, 5052-H32 (.050 X .437), HD	ALUM
47	P-4043	STRIKE, MULTIPOINT	NYLON
48	P-4146	#8 x 3/4" PH FLAT TEK, SS	SS
49	P-4491	REINF. COIL-ALUMINUM, 5052-H32 (.062 X .656), HD	ALUM
50	P-4641	#8 x 5/8" PH FLAT TEK, #7 HEAD, SS	SS
51	S-1505	REINF. CASE. SASH	ALUM
52	S-6237	GLZ. BD., 7/8"	PVC

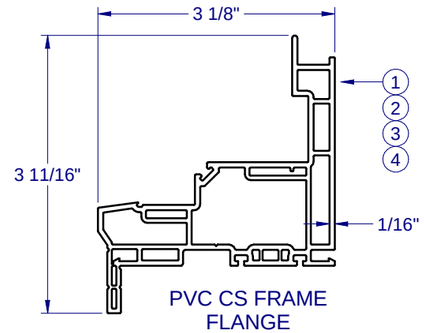

PVC CS FRAME FLANGE
S-6235

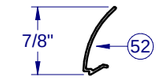

PVC GLAZING BEAD
S-6237

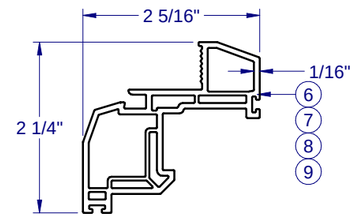

PVC CS SASH
S-6234

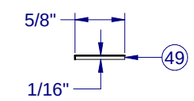

COIL, .062 X .656
P-4491

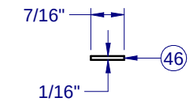

COIL, .05 X .437
P-4050

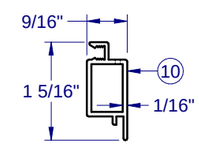

SCREEN RAIL SIDE/BTM
H-1592

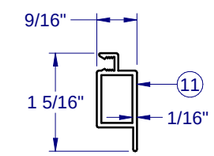

SCREEN RAIL TOP/SIDE
H-1593

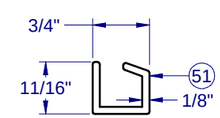

SASH REINF.
S-1505

FRAME AND SASH CORNER CONSTRUCTION

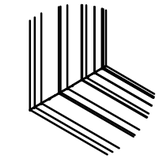

CORNER WELD
(ALL SIDES)
1:8

LINE ITEMS NOT USED:
5, 21-22

NOTE: ALL ALUMINUM EXTRUSIONS ARE 6063-T6 UNLESS OTHERWISE NOTED.

CWS
1900 SW 44TH AVE.
OCALA, FLORIDA 34474
WWW.CWS.CC

VCM02

8400 PVC CASEMENT NON-IMPACT

PROPRIETARY AND CONFIDENTIAL
THE INFORMATION CONTAINED IN THIS DRAWING IS THE SOLE PROPERTY OF CUSTOM WINDOW SYSTEMS, INC. ANY REPRODUCTION IN PART OR AS A WHOLE WITHOUT THE WRITTEN PERMISSION OF CUSTOM WINDOW SYSTEMS, INC IS PROHIBITED.

FLORIDA APPROVAL NO.:
4452

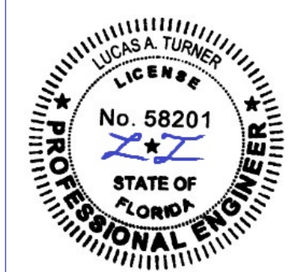

8/17/2026

LUCAS A. TURNER, P.E.
FL PE # 58201
Turner Engineering & Consulting, Inc.
2428 Old Natchez Trc Trl
Camden, TN 38320
PH. 941-380-1574

SHEET DESCRIPTION:
BOM AND EXTRUSIONS

DRAWN BY:	DATE:
MCS	8/14/2026
DWG #: CWS-508	REV.: F
SCALE: 1:2	SHEET 4 OF 6

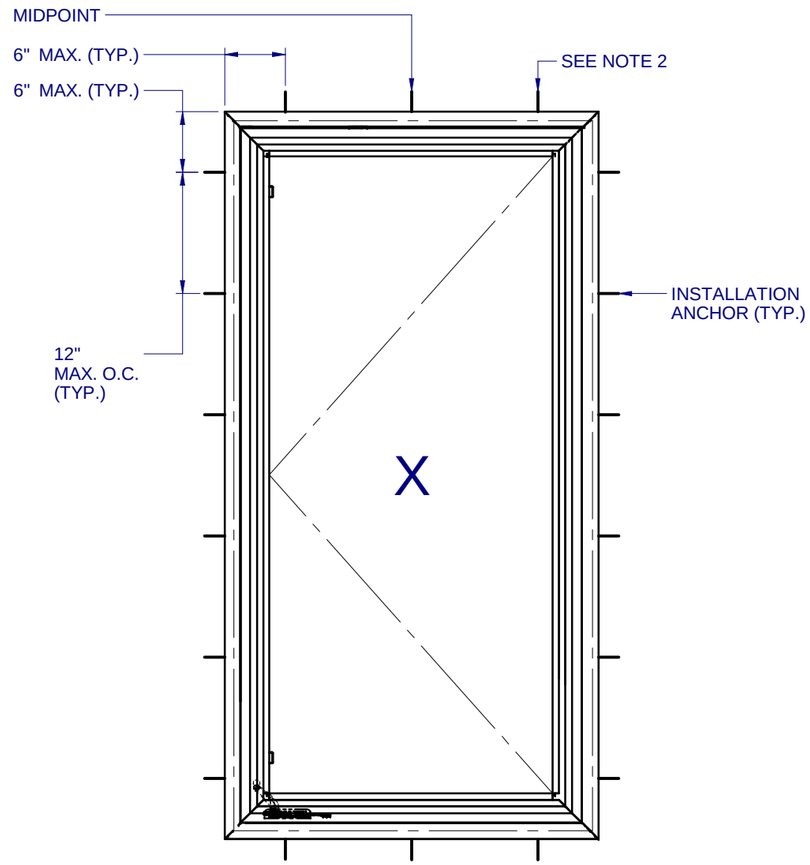

ANCHOR LAYOUT - (FLANGE)

NOTES:

1. INSTALL ONE ANCHOR AT EACH INSTALLATION LOCATION. SILL ANCHOR SPACING SAME AS HEAD.

2. SHIM AS REQ AT EACH INSTALLATION ANCHOR USING LOAD BEARING SHIMS. MAX. ALLOWABLE SHIM STACK TO BE 1/4". USE SHIMS WHERE SPACE GREATER THAN 1/16" IS PRESENT. LOAD BEARING SHIMS SHALL BE CONSTRUCTED OF HIGH DENSITY PLASTIC OR BETTER. WOOD SHIMS ARE NOT ALLOWED.

3. ANCHOR TYPE, SIZE, SPACING AND EMBEDMENT SHALL BE AS SPECIFIED IN THESE DRAWINGS, SEE TABLE 1, SHEET 6.

4. ALL INSTALLATION ANCHORS MUST BE MADE OF OR PROTECTED WITH A CORROSION RESISTANT MATERIAL OR COATING. DISSIMILAR METALS OR MATERIALS IN CONTACT WITH PRESSURE TREATED WOOD MUST BE PROTECTED TO PREVENT REACTION.

5. INSTALLATION ANCHORS SHALL BE IN ACCORDANCE WITH ANCHOR MANUFACTURER'S INSTALLATION INSTRUCTIONS, AND ANCHORS SHALL NOT BE USED IN SUBSTRATES WITH STRENGTHS LESS THAN THE MINIMUM SPECIFIED IN TABLE 1, SHEET 6.

6. ANCHOR EMBEDMENT TO SUBSTRATE SHALL BE BEYOND WALL DRESSING OR STUCCO. FOR CONCRETE/CMU OPENINGS, EMBEDMENT SHALL BE BEYOND WOOD BUCKS, IF USED, INTO SUBSTRATE - 1X BUCKS ARE OPTIONAL.

7. A MINIMUM CENTER-TO-CENTER SPACING SHALL BE MAINTAINED BETWEEN ALL FASTENERS: 3" FOR MASONRY, 1" FOR WOOD AND METAL.

8. WOOD OR MASONRY OPENINGS, BUCKS AND BUCK FASTENERS SHALL BE PROPERLY DESIGNED BY THE ARCHITECT OR ENGINEER OF RECORD AND INSTALLED TO TRANSFER WIND LOADS TO THE STRUCTURE. SUBSTRATES SHALL MEET THE MINIMUM STRENGTH REQUIREMENTS AS SHOWN IN TABLE1, SHEET 6. CONCRETE AND MASONRY SUBSTRATES MAY NOT BE CRACKED.

9. SEALING AND FLASHING STRATEGIES FOR OVERALL WATER RESISTANCE OF INSTALLATION SHALL BE DONE BY OTHERS FOLLOWING THE CURRENT VERSION OF THE REFERENCE DOCUMENTS: FMA/AAMA 100(FIN WINDOWS), FMA/AAMA 200(FLANGE WINDOWS), FMA/WDMA 250(BOX WINDOWS), FMA/AAMA/WDMA 300(EXTERIOR DOORS)

1900 SW 44TH AVE.
OCALA, FLORIDA 34474
WWW.CWS.CC

VCM02

8400 PVC CASEMENT NON-IMPACT

PROPRIETARY AND CONFIDENTIAL
THE INFORMATION CONTAINED IN THIS DRAWING IS THE SOLE PROPERTY OF CUSTOM WINDOW SYSTEMS, INC. ANY REPRODUCTION IN PART OR AS A WHOLE WITHOUT THE WRITTEN PERMISSION OF CUSTOM WINDOW SYSTEMS, INC IS PROHIBITED.

FLORIDA APPROVAL NO.:
4452

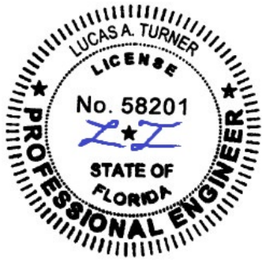

8/17/2026

LUCAS A. TURNER, P.E.
FL PE # 58201
Turner Engineering & Consulting, Inc.
2428 Old Natchez Trc Trl
Camden, TN 38320
PH. 941-380-1574

SHEET DESCRIPTION:
ANCHOR SCHEDULE AND NOTES

DRAWN BY:	DATE:
MCS	8/14/2026
DWG #: CWS-508	REV.: F
SCALE: 1:15	SHEET 5 OF 6

TYPICAL HEAD ANCHORAGE

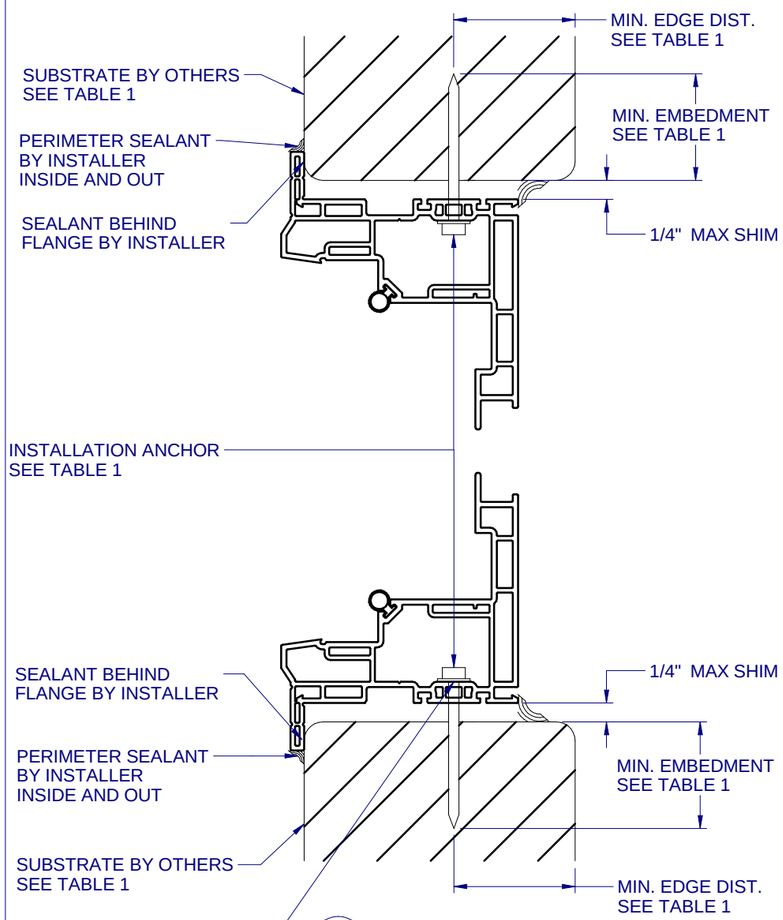

A / 6 VERTICAL SECTION
TYPICAL SILL ANCHORAGE

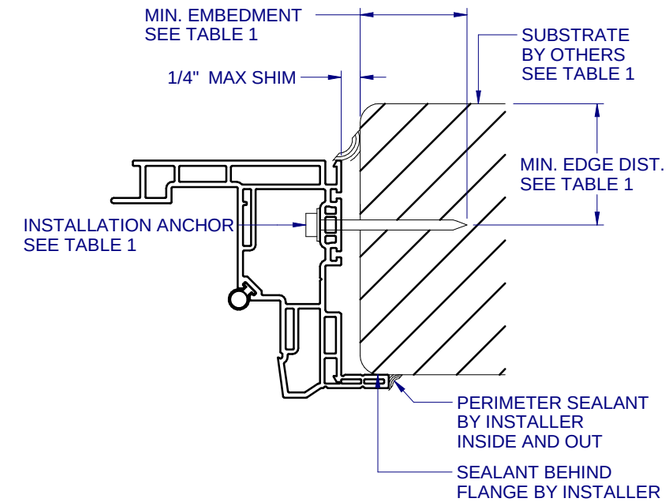

B / 6 HORIZONTAL SECTION
TYPICAL JAMB ANCHORAGE

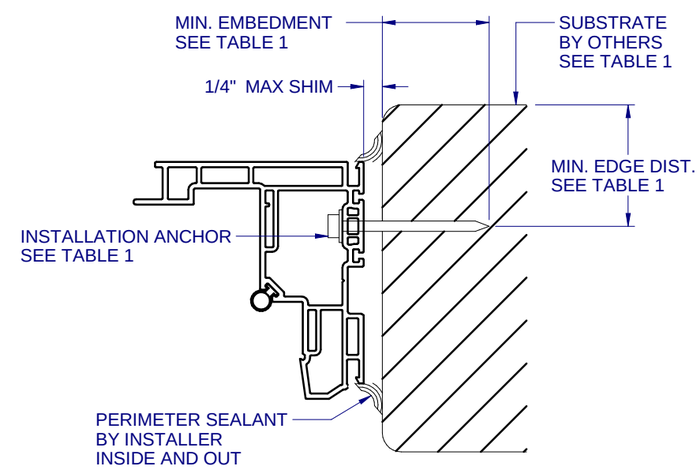

C / 6 HORIZONTAL SECTION
BOX FRAME INSTALLATION
HEAD AND SILL SIMILAR FOR BOX INSTALLATION

FOR INSTALLATIONS WITHIN 3,000 FEET OF A SALTWATER COASTLINE, ANCHORAGE MUST BE REVIEWED FOR COMPLIANCE WITH FBC SECTION 1711 OR SECTION R332 OF THE FLORIDA RESIDENTIAL CODE. REFER TO THE CORRESPONDING EVALUATION REPORT OF THIS APPROVAL FOR ADDITIONAL INFORMATION.

TABLE 1: APPROVED INSTALLATION FASTENERS

SUBSTRATE TYPE	ANCHOR TYPE	MIN. EMBEDMENT	MIN. EDGE DIST.
CONCRETE (2.0 KSI MIN.)	3/16" ITW TAPCON	1"	1-1/8"
HOLLOW OR GROUT-FILLED CMU (117 PCF MIN.)	3/16" ITW TAPCON	1"	2"
CONCRETE (3.05 KSI MIN.)	3/16" DEWALT ULTRACON+	1-3/4"	1"
HOLLOW OR GROUT-FILLED CMU (ASTM C-90)	3/16" DEWALT ULTRACON+	1-1/4"	2-1/2"
2X MIN. SPRUCE-PINE-FIR (G=0.42)	3/16" ITW TAPCON OR DEWALT ULTRACON+	1-3/8"	7/8"
2X MIN. SPRUCE-PINE-FIR (G=0.42)	#10 WOOD SCREW	1-3/8"	7/8"
16 GAUGE (0.060") MIN. STEEL STUD (33 KSI YIELD MIN)	#10-16 HILTI KWIK-FLEX OR ITW TEKS SELF-DRILLING SCREW	FULL THREAD THRU 0.060"	7/16"
1/8" ALUM. (6063-T5 MIN.) OR 1/8" STEEL (33 KSI MIN.)	#10 GRADE 5 SELF-TAPPING / DRILLING SCREW	FULL THREAD THRU 0.125"	7/16"

FLANGE REMOVAL NOTE: PARTIALLY OR FULLY REMOVING THE FLANGE, UP TO AND INCLUDING A BOX-FRAME APPLICATION IS ACCEPTABLE PROVIDED:

- MIN. 1/4" FILLET OF CONSTRUCTION-GRADE ADHESIVE CAULK IS APPLIED INSIDE AND OUT, FULL PERIMETER, BY INSTALLER.
- PRODUCT ANCHORAGE IS IN ACCORDANCE WITH REQUIREMENTS AS SHOWN FOR FLANGE WINDOWS.

CWS
1900 SW 44TH AVE.
OCALA, FLORIDA 34474
WWW.CWS.CC

VCM02

8400 PVC CASEMENT NON-IMPACT

PROPRIETARY AND CONFIDENTIAL
THE INFORMATION CONTAINED IN THIS DRAWING IS THE SOLE PROPERTY OF CUSTOM WINDOW SYSTEMS, INC. ANY REPRODUCTION IN PART OR AS A WHOLE WITHOUT THE WRITTEN PERMISSION OF CUSTOM WINDOW SYSTEMS, INC IS PROHIBITED.

FLORIDA APPROVAL NO.:
4452

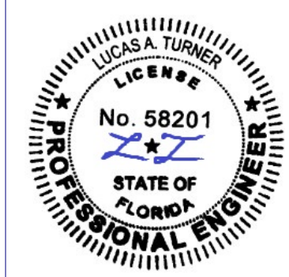

8/17/2026

LUCAS A. TURNER, P.E.
FL PE # 58201
Turner Engineering & Consulting, Inc.
2428 Old Natchez Trc Trl
Camden, TN 38320
PH. 941-380-1574

SHEET DESCRIPTION:
INSTALLATION DETAILS

DRAWN BY:	DATE:
MCS	8/14/2026
DWG #: CWS-508	REV.: F
SCALE: 1:2	SHEET 6 OF 6