CORNERSTONE BUILDING BRANDS

ShadowRib on
16ga Girts
FL42378.06-R2

ShadowRib on Steel Purlins

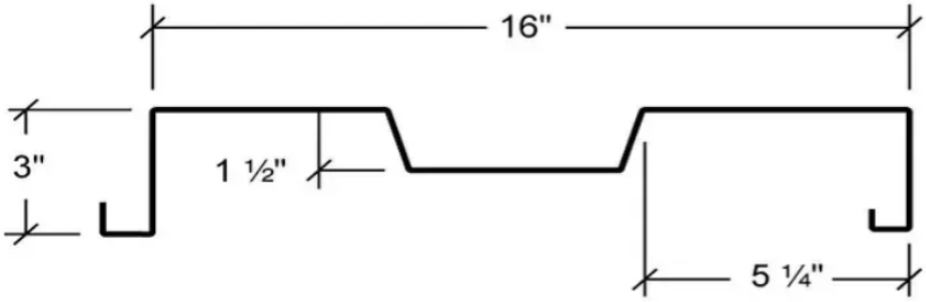

Fortify Building Solutions
7313 Fairview St.
Houston, TX 77041

American Building Components
7313 Fairview St.
Houston, TX 77041

Ceco Building Systems
7313 Fairview St.
Houston, TX 77041

MBCI
7313 Fairview St.
Houston, TX 77041

Metallic Building Systems
7313 Fairview St.
Houston, TX 77041

Metal Sales
7800 Highway 60
Sellersburg, IN 47172

Metal Sales by MBCI
7800 Highway 60
Sellersburg, IN 47172

Mueller
1915 Hutchins Ave.
Ballinger, TX 76821

Robertson Building Systems
7313 Fairview St.
Houston, TX 77041

Star Building Systems
7313 Fairview St.
Houston, TX 77041

Union Corrugating
701 S. King St.
Fayetteville, NC 28301

Product Description

Wall panel with nominal 3" rib height, and panel coverage of 16". This profile may be produced with alternate names: ShadowRib.

Product Material

24ga (min) steel

Comply with FBC 1405.2 where required.

Clip & Fastener

ShadowRib Clip (HW-6602 or similar) with (2) ¼" x 1" fasteners per clip. Comply with FBC 1711 where required.

Substrate/Deck

16ga (min) steel girts or other framing

Min 50ksi

Evaluated by:

David Eng, PE
Timberlake Cove, LLC
1317 Edgewater Dr, Ste 2339 | Orlando FL
FL PE 81377 | FL CA 33344
www.TimberLakeCove.com

DAVID E. ENG
LICENSE
No. 81377
STATE OF FLORIDA
PROFESSIONAL ENGINEER

David E Eng
2026.10.02 13:39:28 -06'00'

This item has been digitally signed and sealed by D.E. Eng, PE, on the date indicated. Printed copies of this document are not considered signed and sealed and the signature must be verified on any electronic copies

Maximum Allowable Loads & Installation Requirements:

This product approval covers 1 installation configuration. A factor of safety of 2 has been applied to all allowable uplift pressures shown.

Installed with Stitch Screw in Sidelap

Use ¼"x 0.875 stitch screw with sealing washer with same spacing as clip spacing

Method A: (2) ¼" x 1" fasteners per clip with clips at 96" o.c. spacing:

Negative pressure: 17.5 PSF

Positive pressure: 45 PSF

Method B: (2) ¼" x 1" fasteners per clip with clips at 24" o.c. spacing

Negative pressure: 95 PSF

Positive pressure: 45 PSF

Interpolation between negative pressures for Method A and Method B shall be permitted

METHOD A: 96" O.C.
METHOD B: 24" O.C.

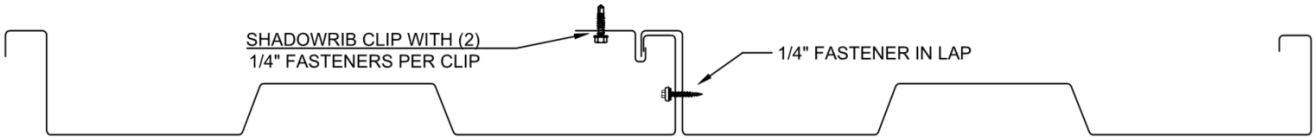

Technical Documentation:

This product has been tested by Force Engineering (TST5328) to the ASTM E1592 standard, reports 07-0156T-08 A, B, C as referenced in FL 11917.6-R4.
ASTM E1592-01 is materially similar to ASTM E1592-05 (2012).
ASTM E1592-05 (2017) is materially similar to ASTM E1592-05 (2012).

Compliance Statement:

This product as described has demonstrated compliance with Florida Building Code 2026 (9th Edition), Section 1403.3 (wind loading only, **non-HVHZ**), as required by FL Rule 61G20-3, method 1D.

This product as described has been tested and demonstrated compliance with:

- ASTM E1592 – Test Method for Structural Performance of Sheet Metal Roof and Siding Systems by Uniform Static Air Pressure Difference

Design Process:

Compare the maximum allowable loads on page 2 to the ASD uplift and positive pressures for the project to determine sufficiency and installation requirements. Notes that positive pressures cannot resist uplift, nor can uplift pressures resist positive loading.

Alternatively, as an option, the load tables in this report provides one prescriptive option for the fastening requirement for the applicable wind loads for roofs within the parameters described. For roofs outside of the listed parameters, design wind loads shall be determined as required by FBC 1609, ASCE 7, or other design code in force, using allowable stress. These load tables are based on ASCE 7-22. Use of these tables assumes that the structure is: Enclosed and conforms to wind-borne debris provisions and is a regular shaped building and is not subject to across-wind loading, vortex shedding, or instability; nor does it have a site location for which channeling or buffeting warrant consideration

Engineering analysis may be completed by other licensed engineers for project specific approval by local authorities having jurisdiction.

Optional Load Tables:

These load tables are provided as a courtesy to provide one possible prescriptive option for a generic, typical structure without calculating the design pressures.

For structures outside the parameters of these load tables (e.g. height above 30 feet), calculate the required allowable design pressure and compare to the maximum allowable loads shown on page 2. These load tables shall not be construed to in any way limit the installation of this product to the cases shown.

Contact the manufacturer for further information, or consult a licensed design professional.

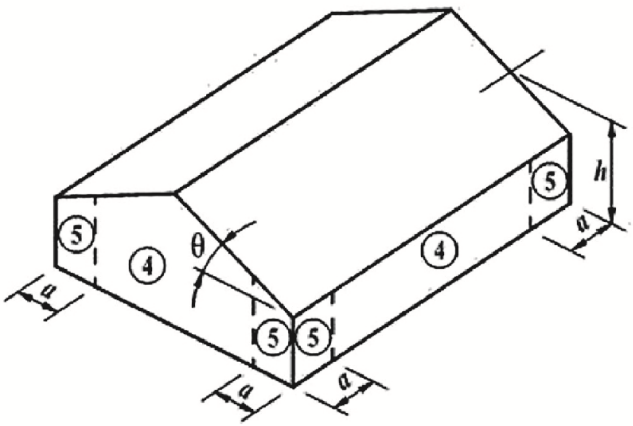

Instructions:

Select the appropriate load table that applies to the structure in question.

Determine the design wind speed for the project location.

Use the attachment method indicated for that windspeed within each zone.

Use this load table for structures which meet the following criteria:
Are located in **Exposure B** area
Have a mean Roof Height of **30 feet or less**

FL42378.06: 24ga ShadowRib on 16ga Girts

Wind	120	130	140	150	160	170	180	190	200
Zone 4:	A	B	B	B	B	B	B	B	B
Zone 5:	B	B	B	B	B	B	B	B	B

Use this load table for structures which meet the following criteria:
Are located in **B, C, or D exposure** area
Have a mean Roof Height of **30 feet or less**

FL42378.06: 24ga ShadowRib on 16ga Girts

Wind	120	130	140	150	160	170	180	190	200
Zone 4:	B	B	B	B	NR	NR	NR	NR	NR
Zone 5:	B	B	B	B	NR	NR	NR	NR	NR

Locations and Trade Names

This product is manufactured by Cornerstone Building Brands by one or more of the following brands, and is distributed under one or more the trade names shown below. Each brand maintains a variety of manufacturing facilities and trade names, to include the ones noted here. Contact the manufacturers listed for the most up-to-date list of locations serving the Florida market.

Corporate Headquarters
5020 Weston Parkway | Cary, NC 27513

Fortify Building Solutions
7313 Fairview St.
Houston, TX 77041

American Building Components
7313 Fairview St.
Houston, TX 77041

Ceco Building Systems
7313 Fairview St.
Houston, TX 77041

MBCI
7313 Fairview St.
Houston, TX 77041

Metallic Building Systems
7313 Fairview St.
Houston, TX 77041

Metal Sales
7800 Highway 60
Sellersburg, IN 47172

Metal Sales by MBCI
7800 Highway 60
Sellersburg, IN 47172

Mueller
1915 Hutchins Ave.
Ballinger, TX 76821

Robertson Building Systems
7313 Fairview St.
Houston, TX 77041

Star Building Systems
7313 Fairview St.
Houston, TX 77041

Union Corrugating
701 S. King St.
Fayetteville, NC 28301

Certification of Independence:

David Eng, PE and Timberlake Cove, LLC do not have, nor will acquire a financial interest in any company manufacturing or distributing products under this evaluation. The same entities do not have, nor will acquire, a financial interest in any other entity involved in the approval process of the product.

Exclusions and Limitations:

Design of deck and roof structure (to include attachment of plywood or wood plank) shall be completed by others. Fire classification and shear diaphragm design are outside the scope of this evaluation. Accelerated weathering/salt spray is outside the scope of this evaluation. Metal hip and ridge cover is outside the scope of this evaluation.

This report is limited to compliance with structural wind load requirements of FBC 1504.3.2, as required by Rule 61G20-3. Neither Timberlake Cove nor the manufacturer shall be responsible for any conclusions, interpretations, or designs made by others based on this evaluation report. This report is limited solely to documenting compliance with Rule 61G20-3, and makes no express or implied warranty regarding performance of this product. Installation shall be subject to the local building code and authority having jurisdiction; this report shall not be construed to supersede local codes in force.