EVALUATION REPORT OF
ALLIANCE STEEL INC.'S
'PBR PANEL'

FLORIDA BUILDING CODE 9TH EDITION (2026)
FLORIDA PRODUCT APPROVAL
FL 41985.4-R2
PANEL WALLS
SIDING

Prepared For:
Alliance Steel, Inc.
3333 South Council Road
Oklahoma City, OK 73179-4410
Telephone: (405) 745 7500

Prepared By:
Bala Sockalingam, Ph.D., P.E.
Florida Professional Engineer #62240
1216 N Lansing Ave., Suite C
Tulsa, OK 74106
Telephone: (918) 492-5992

This report consists of
Evaluation Report (3 Pages including cover)
Installation Details (1 Page)
Load Span Table (1 Page)

Report No. C3088-4
Date: 10.15.2026

BALA SOCKALINGAM
LICENSE
No. 62240
STATE OF
FLORIDA
PROFESSIONAL ENGINEER

This item has been digitally signed and sealed by Bala Sockalingam, PE, on the date indicated.

Printed copies of this document are not considered signed and sealed and this signature must be verified on any electronic copies.

2026.10.15
16:01:27
-04'00'

Manufacturer:	Alliance Steel Inc.
Product Name:	PBR Panel
Panel Description:	36" wide coverage with (4) 1.25" high ribs at 12" o.c.
Materials:	Min. 26 ga., 80 ksi steel or min. 24 ga., 50 ksi steel. Galvanized coated steel (ASTM A653) or Galvalume coated steel (ASTM A792) or painted steel (ASTM A755) as per FBC 2026 Section 1405.2.
Support Description:	Min. 16 ga., min 50 ksi steel section. (Must be designed by others)
Design Uplift Pressure: (Factor of Safety = 2) (2 or more spans)	Fastener Pattern 1 -20.0 psf at support spacing of 96 o.c. -39.5 psf at support spacing of 60 o.c. -149.4 psf at support spacing of 24 o.c. Fastener Pattern 2 -20.0 psf at support spacing of 96 o.c. -52.4 psf at support spacing of 60 o.c. -193.8 psf at support spacing of 24 o.c.
Panel Fastening:	#12-14 x 1-1/4" long corrosion resistant self-drilling screws with washer.
Fastener Pattern 1	Fasteners at 12" o.c. across the panel width at interior supports and at 7"-5"-7" o.c. across the panel width at end supports.
Fastener Pattern 2	Fasteners at 7"-5"-7" o.c. across the panel width at all supports.
Sidelap Fastening:	¼"-14 x 7/8" long corrosion resistant self-drilling screws with washer at 20" o.c. For installation in areas within 3000 ft. of a saltwater coastline, panel and sidelap fasteners are corrosion resistant as per FBC 2026 Section 1711.
Test Standard:	Wall assembly tested in accordance with ASTM E1592-01 and E1592-05(2012) 'Test Method for Structural Performance of Sheet Metal Roof and Siding Systems by Uniform Static Air Pressure'.
Test Equivalency:	The test procedures in ASTM E1592-01 and E1592-05(2012) comply with test procedures prescribed in ASTM E1592-05(2017).
Code Compliance:	The product described herein has demonstrated compliance with FBC 2026 Section 1404.5.
Product Limitations:	Design wind loads shall be determined for each project in accordance with FBC 2026 Section 1609 or ASCE 7-22 using

allowable stress design. The design pressure for reduced support spacing may be computed using rational analysis prepared by a Florida Professional Engineer or based on Alliance Steel's load span table. This evaluation report is not applicable in High Velocity Hurricane Zone.

Supporting Documents: ASTM E1592 Test Reports
Farabaugh Engineering and Testing
T155-14, Reporting Date 3/19/2014
T156-14, Reporting Date 3/19/2014
ENCON Technology Inc.
C2145-1, Reporting Date 4/18/2017

(Alliance Steel is authorized to use Associated Steel Group's Test Report)

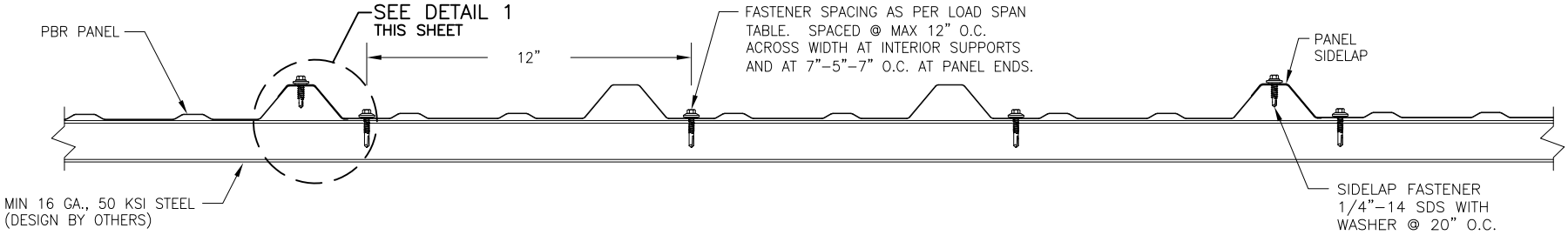

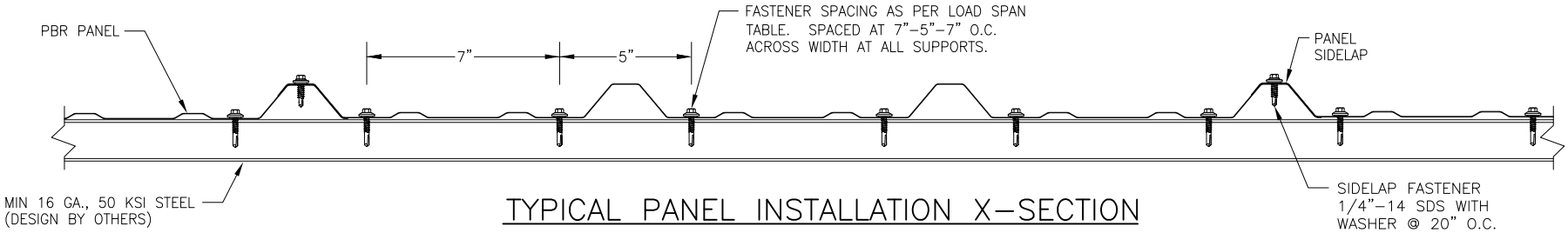

TYPICAL PANEL INSTALLATION X-SECTION

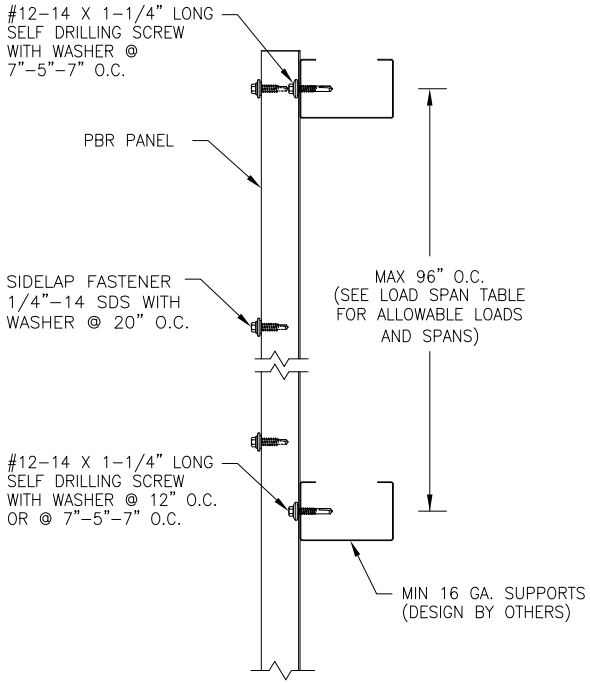

SECTION VIEW

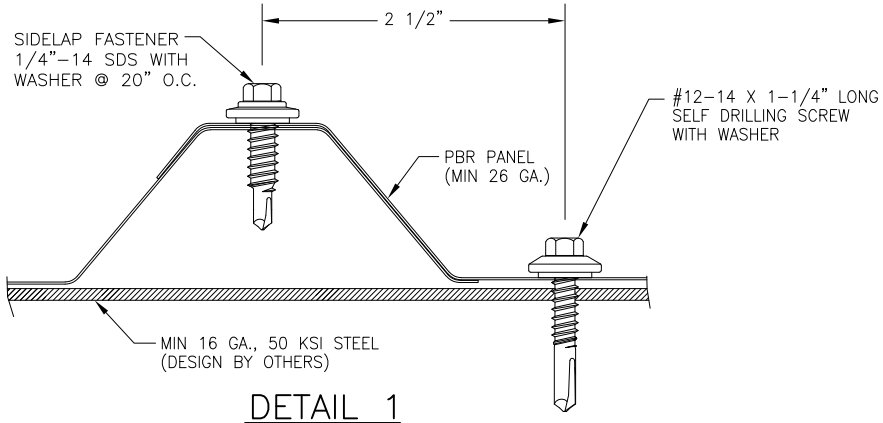

DETAIL 1

GENERAL NOTES:

1. STRUCTURAL WALL PANEL HAS BEEN DESIGNED IN ACCORDANCE WITH THE FLORIDA BUILDING CODE (FBC).
2. WALL PANELS SHALL BE MIN. 26 GA. (t = 0.017"). EFFECTIVE COVERING WIDTH OF PANEL = 36".
3. THE WALL PANELS SHALL BE INSTALLED OVER STRUCTURE AS SPECIFIED ON THIS DRAWING.
4. REQUIRED DESIGN WIND LOADS SHALL BE DETERMINED FOR EACH PROJECT. THIS PANEL SYSTEM MAY NOT BE INSTALLED WHEN THE REQUIRED DESIGN WIND LOADS ARE GREATER THAN THE ALLOWABLE DESIGN LOADS.
5. ALL FASTENERS MUST BE IN ACCORDANCE WITH THIS DRAWING & THE FLORIDA BUILDING CODE. IF A DIFFERENCE OCCURS BETWEEN THE MINIMUM REQUIREMENTS OF THIS DRAWING & THE CODE, THE CODE SHALL CONTROL.
6. SUPPORTS MUST BE DESIGNED TO WITHSTAND WIND LOADS AS REQUIRED FOR EACH APPLICATION AND ARE THE RESPONSIBILITY OF OTHERS.

DRAWN BY: B.S.	CHECKED BY: K.S.
PLOT:	DATE: 8/24/2023

NO.	REVISION DESCRIPTION	BY	DATE

DRAWING TITLE: PBR WALL PANEL

MANUFACTURER: ALLIANCE STEEL INC.
3333 SOUTH COUNCIL ROAD
OKLAHOMA CITY, OK 73179-4410
405 745 7500

CONSULTANTS: BALA SOCKALINGAM, PH.D., P.E.
1216 N LANSING AVE, SUITE C
TULSA, OK 74106
PHONE: 918-492-5992

DRAWING NO. 3088-4 REV.

PAGE NO. 1 OF 1

ALLIANCE STEEL INC.
PBR Panel
Allowable Outward Loads

Support Spacing (in)	Allowable Outward Loads (psf)	
	Fastener Pattern 1	Fastener Pattern 2
24	**-149.4**	**-193.8**
27	-129.0	-167.6
30	-112.7	-146.7
33	-99.4	-129.5
36	-88.3	-115.2
39	-78.9	-103.2
42	-70.8	-92.8
45	-63.8	-83.8
48	-57.7	-76.0
51	-52.3	-69.0
54	-47.5	-62.9
57	-43.3	-57.4
60	**-39.4**	**-52.4**
66	-34.7	-44.5
72	-30.8	-38.0
78	-27.5	-32.5
84	-24.6	-27.7
90	-22.2	-23.6
96	**-20.0**	-20.0

Notes:

1. The bold numbers indicate allowable loads calculated from test data with safety factor of 2.
2. Fastener Pattern 1: Fasteners at 12" o.c. across the panel width at interior supports and at 7"-5"-7" o.c. across the panel width at end supports.
3. Fastener Pattern 2: Fasteners at 7"-5"-7" o.c. across the panel width at all supports.
4. Allowable load is applicable to two or more spans conditions.
5. Panels must be installed as per Evaluation Report FL 41985.4 and Alliance Steel current installation procedure.
6. The structural capacity of support beams are not considered and must be examined independently.
7. Minimum support thickness is 16 ga.

1216 N Lansing Ave., Suite C
Tulsa, Ok 74106
918 492 5992

Bala Sockalingam, Ph.D., P.E.
FL 62240