EVALUATION REPORT OF
ALLIANCE STEEL INC.'S
'PBR PANEL'

FLORIDA BUILDING CODE 8TH EDITION (2023)
FLORIDA PRODUCT APPROVAL
FL 41984.4-R1
STRUCTURAL COMPONENTS
ROOF DECK

Prepared For:
Alliance Steel, Inc.
3333 South Council Road
Oklahoma City, OK 73179-4410
Telephone: (405) 745 7500

Prepared By:
Bala Sockalingam, Ph.D., P.E.
Florida Professional Engineer #62240
1216 N Lansing Ave., Suite C
Tulsa, OK 74106
Telephone: (918) 492-5992

This report consists of
Evaluation Report (3 Pages including cover)
Installation Details (1 Page)
Load Span Table (1 Page)

Report No. C2682-4
Date: 8.29.2023

BALA SOCKALINGAM
LICENSE
No. 62240
STATE OF
FLORIDA
PROFESSIONAL ENGINEER

This item has been digitally signed and sealed by Bala Sockalingam, PE, on the date indicated.

Printed copies of this document are not considered signed and sealed and this signature must be verified on any electronic copies.

2023.08.29
17:50:32 -05'00'

Manufacturer:	Alliance Steel Inc.
Product Name:	PBR Panel
Panel Description:	36" wide coverage with (4) 1-1/4" high ribs at 12" o.c.
Materials:	Min. 26 ga., 80 ksi steel or min. 24 ga., 50 ksi steel. Galvanized coated steel (ASTM A653) or Galvalume coated steel (ASTM A792) or painted steel (ASTM A755). Corrosion resistant as per FBC 2023 Section 1507.4.3.
Support Description:	Min. 16 ga., 50 ksi steel section. (Must be designed by others)
Slope:	1/2:12 or greater in accordance with FBC 2023 Section 1507.4.2. Requires applied lap sealant for roof slopes less than 3:12.
Design Uplift Pressure: (Factor of Safety = 2) (2 or more spans)	Fastener Pattern 1 -39.5 psf at support spacing of 60 o.c. -149.4 psf at support spacing of 24 o.c. Fastener Pattern 2 -52.4 psf at support spacing of 60 o.c. -193.8 psf at support spacing of 24 o.c.
Panel Fastening:	#12-14 x 1-1/4" long self-drilling screws with washer. Fasteners are corrosion resistant as per FBC 2023 Section 1507.4.4.
Fastener Pattern 1	Fasteners at 12" o.c. across the panel width at interior supports and at 7"-5"-7" o.c. across the panel width at end supports.
Fastener Pattern 2	Fasteners at 7"-5"-7" o.c. across the panel width at all supports.
Sidelap Fastening:	¼"-14 x 7/8" long self-drilling screws with washer at 20" o.c. Fasteners are corrosion resistant as per FBC 2023 Section 1507.4.4.
Test Standards:	Roof assembly tested in accordance with ASTM E1592-01 'Test Method for Structural Performance of Sheet Metal Roof and Siding Systems by Uniform Static Air Pressure Difference' and FM 4470 Section 4.6 'Resistance to Foot Traffic'.
Test Equivalency:	The test procedures in ASTM E1592-01 comply with test procedures prescribed in ASTM E1592-05(2017).
Code Compliance:	The product described herein has demonstrated compliance with FBC 2023 Section 1507.4
Product Limitations:	Design wind loads shall be determined for each project in accordance with FBC 2023 Section 1609 or ASCE 7-22 using

allowable stress design. The design pressure for support spacing may be computed using rational analysis prepared by a Florida Professional Engineer or based on Alliance Steel load span table. This evaluation report is not applicable in High Velocity Hurricane Zone. Fire classification is not within the scope of this Evaluation Report. Refer to FBC 2023 Section 1505 and current approved roofing materials directory or ASTM E108/UL790 report from an accredited laboratory for fire ratings of this product.

Supporting Documents:

ASTM E1592 Test Reports
Farabaugh Engineering and Testing
T155-14, Reporting Date 3/19/2014
T156-14, Reporting Date 3/19/2014

FM 4470 Test Report
ENCON Technology Inc.
C2634-1, Reporting Date 3/25/2023

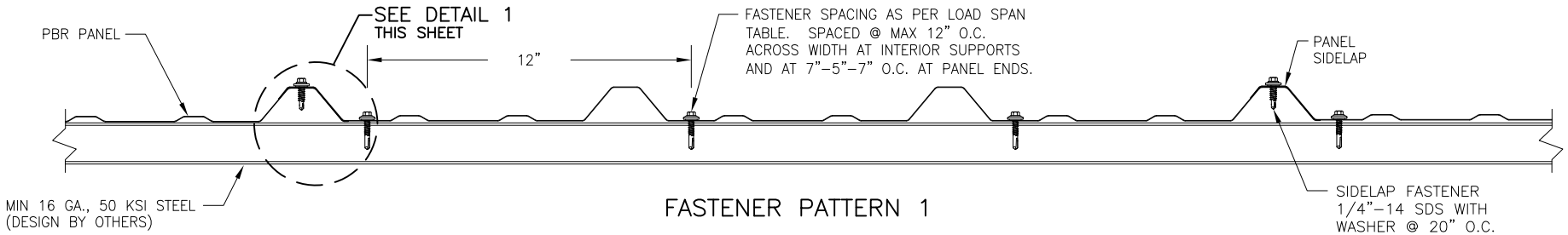

FASTENER PATTERN 1

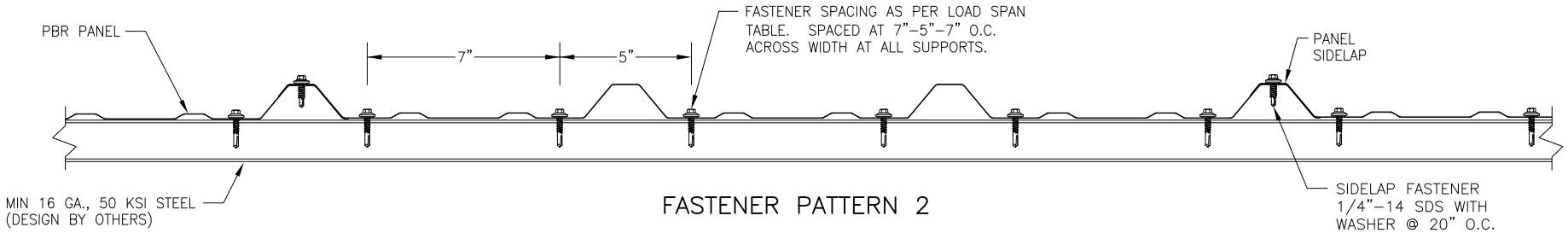

FASTENER PATTERN 2

TYPICAL PANEL INSTALLATION X–SECTION

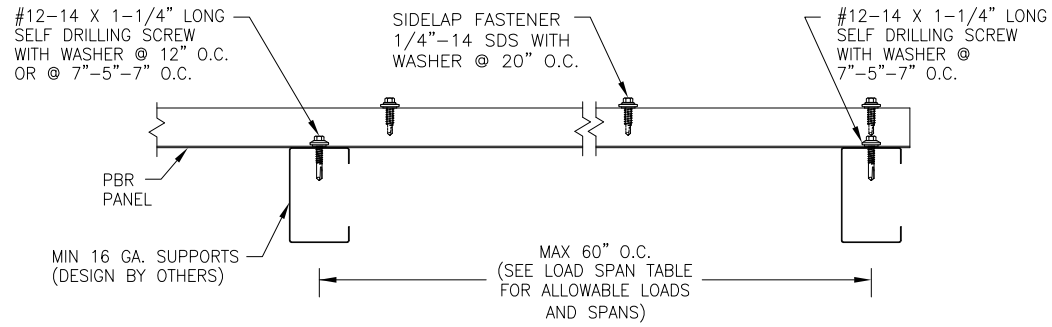

SECTION VIEW

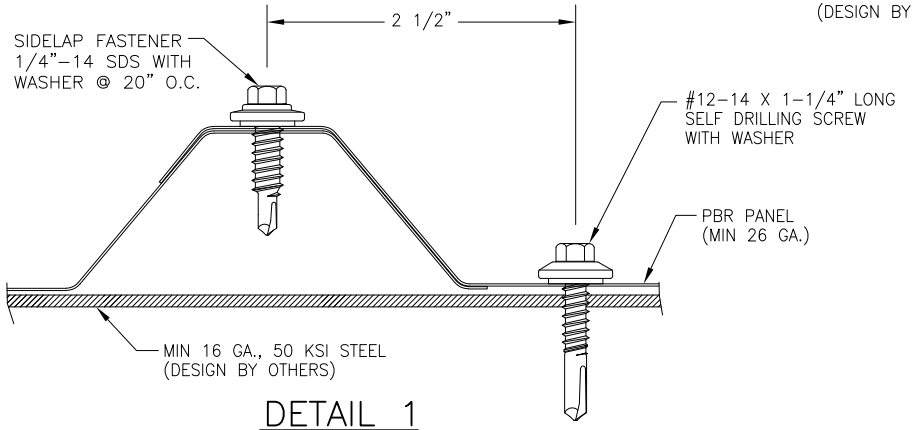

DETAIL 1

GENERAL NOTES:

1. STRUCTURAL ROOF PANEL HAS BEEN DESIGNED IN ACCORDANCE WITH THE FLORIDA BUILDING CODE (FBC).
2. PANELS SHALL BE MIN. 26 GA. (t = 0.017"). EFFECTIVE COVERING WIDTH OF PANEL = 36".
3. ROOF PANELS SHALL BE INSTALLED OVER STRUCTURE AS SPECIFIED ON THIS DRAWING.
4. REQUIRED DESIGN WIND LOADS SHALL BE DETERMINED FOR EACH PROJECT. THIS PANEL SYSTEM MAY NOT BE INSTALLED WHEN THE REQUIRED DESIGN WIND LOADS ARE GREATER THAN THE ALLOWABLE WIND LOADS SPECIFIED ON THIS DRAWING.
5. ALL FASTENERS MUST BE IN ACCORDANCE WITH THIS DRAWING & THE FLORIDA BUILDING CODE. IF A DIFFERENCE OCCURS BETWEEN THE MINIMUM REQUIREMENTS OF THIS DRAWING & THE CODE, THE CODE SHALL CONTROL.
6. PURLINS/JOISTS/TRUSSES MUST BE DESIGNED TO WITHSTAND WIND LOADS AS REQUIRED FOR EACH APPLICATION AND ARE THE RESPONSIBILITY OF OTHERS.

DRAWN BY: B.S.	CHECKED BY: K.S.
PLOT:	DATE: 8/24/2024

NO.	REVISION DESCRIPTION	BY	DATE

DRAWING TITLE: PBR ROOF PANEL

MANUFACTURER: ALLIANCE STEEL INC.
3333 SOUTH COUNCIL ROAD
OKLAHOMA CITY, OK 73179–4410
405 745 7500

CONSULTANTS
BALA SOCKALINGAM, PH.D., P.E.
1216 N LANSING AVE, SUITE C
TULSA, OK 74106
PHONE: 918–492–5992 FAX: 866–366–1543

DRAWING NO. 2682–4 REV.

PAGE NO. 1 OF 1

ALLIANCE STEEL INC.
PBR Panel
Allowable Uplift Loads

Support Spacing (in)	Allowable Uplift Loads (psf)	
	Fastener Pattern 1	Fastener Pattern 2
24	**-149.4**	**-193.8**
27	-129.0	-167.6
30	-112.7	-146.7
33	-99.4	-129.5
36	-88.3	-115.2
39	-78.9	-103.2
42	-70.8	-92.8
45	-63.8	-83.8
48	-57.7	-76.0
51	-52.3	-69.0
54	-47.5	-62.9
57	-43.3	-57.4
60	**-39.4**	**-52.4**

Notes:
1. The bold numbers indicate allowable loads calculated from test data with safety factor of 2.
2. Fastener Pattern 1: Fasteners at 12" o.c. across the panel width at interior supports and at 7"-5"-7" o.c. across the panel width at end supports.
3. Fastener Pattern 2: Fasteners at 7"-5"-7" o.c. across the panel width at all supports.
4. Allowable load is applicable to two or more spans conditions.
5. Panels must be installed as per Evaluation Report FL 41984.4 and Alliance Steel current installation procedure.
6. The structural capacity of support beams are not considered and must be examined independently.
7. Minimum support thickness is 16 ga.

1216 N Lansing Ave., Suite C
Tulsa, Ok 74106
918 492 5992

Bala Sockalingam, Ph.D., P.E.
FL 62240