EVALUATION REPORT OF
ALLIANCE STEEL INC.'S
'ALLIANCE LOK 16 PANELS'

FLORIDA BUILDING CODE 8TH EDITION (2023)
FLORIDA PRODUCT APPROVAL
FL 41984.1-R1
STRUCTURAL COMPONENTS
ROOF DECK

Prepared For:
Alliance Steel, Inc.
3333 South Council Road
Oklahoma City, OK 73179-4410
Telephone: (405) 745 7500

Prepared By:
Bala Sockalingam, Ph.D., P.E.
Florida Professional Engineer #62240
1216 N Lansing Ave., Suite C
Tulsa, OK 74106
Telephone: (918) 492-5992

This report consists of
Evaluation Report (3 Pages including cover)
Installation Details (2 Pages)
Load Span Tables (3 Pages)

Report No. C2682-1
Date: 8.29.2023

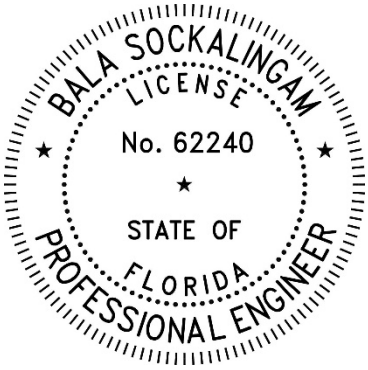

This item has been digitally signed and sealed by Bala Sockalingam, PE, on the date indicated.

Printed copies of this document are not considered signed and sealed and this signature must be verified on any electronic copies.

2023.08.29
17:48:03 -05'00'

Manufacturer:	Alliance Steel, Inc.
Product Name:	Alliance Lok 16 (Alok-16)
Panel Description:	Standing seam panel with 16" wide coverage and 2" high ribs
Materials:	Min 24 ga. with galvalume coated steel (ASTM A792) (F_y = 50 ksi). Corrosion resistant as per FBC 2023 Section 1507.4.3.
Support Description:	Min. 16 ga., 50 ksi steel section (Must be designed by others)
Slope:	1/4:12 or greater in accordance with FBC 2023 Section 1507.4.2
Design Uplift Pressure:	Allowable uplift loads are shown in the load span tables for Min. 24 ga. Alliance Lok 16 panels with TripleLok™ and QuadLok™ Seams fastened with MC 1200, FC 11200, MPS 1200 or MPW 1200 Series clips. Maximum panel span is 5'. The allowable uplift loads were determined from ASTM E1592 testing and are applicable for the panel and panel to clip connection. Clip fastener, purlin, frames and support connections must be designed to resist all loads. The factors of safety were determined in accordance with FBC 2023 Section 1504.9, ASTM E1592 test standard and the procedures of Section I6.3.1, K2.1.1 and K2.1.2 of the AISI S100-16(2020) w/S2-20.
Panel Attachment:	MC, FC, MPS or MPW clip with (2) 1/4"-14 x 1-1/2" long SDS per clip. Clips and fasteners are corrosion resistant as per FBC 2023 Section 1506.7 and 1507.4.4, respectively.
Test Standards:	Roof assembly tested in accordance with ASTM E1592-95, E1592-01, E1592-05(2012) & E1592-05(2017) 'Test Method for Structural Performance of Sheet Metal Roof and Siding Systems by Uniform Static Air Pressure Difference' and FM 4470 Section 5.5 'Resistance to Foot Traffic'.
Test Equivalency:	The test procedures in ASTM E1592-95, E1592-01 and E1592-05(2012) comply with test procedures prescribed in ASTM E1592-05(2017). The test procedures in FM 4470 (1992) comply with test procedures prescribed in FM 4470 (2016) Section 4.6 'Resistance to Foot Traffic'.
Code Compliance:	The product described herein has demonstrated compliance with FBC 2023 Section 1507.4.

Product Limitations: Design wind loads shall be determined for each project in accordance with FBC 2023 Section 1609 or ASCE 7-22 using allowable stress design. The maximum panel span listed herein shall not be exceeded. The design pressure for reduced panel span may be computed using rational analysis prepared by a Florida Professional Engineer or based on Alliance Steel's load span tables. This evaluation report is not applicable in High Velocity Hurricane Zone. Fire classification is not within the scope of this Evaluation Report. Refer to FBC 2023 Section 1505 and current approved roofing materials directory or ASTM E108/UL790 report from an accredited laboratory for fire ratings of this product.

Supporting Documents: ASTM E1592 Test Reports
ENCON Technology Inc.
C1432-1 & 2, Reporting Date 12/28/2005
C2098-1, Reporting Date 1/6/2017
C2518-1 & 2, Reporting Date 11/30/2021
C2389-1, Reporting Date 11/24/2021

FM 4470 Test Report
ENCON Technology Inc.
C1669-1, Reporting Date 9/30/2009

(Alliance Steel is authorized to use Building Research System's Test Reports)

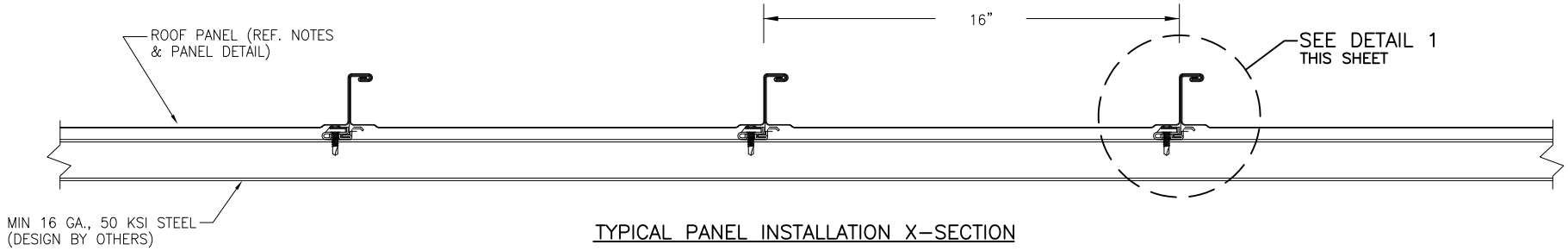

TYPICAL PANEL INSTALLATION X-SECTION

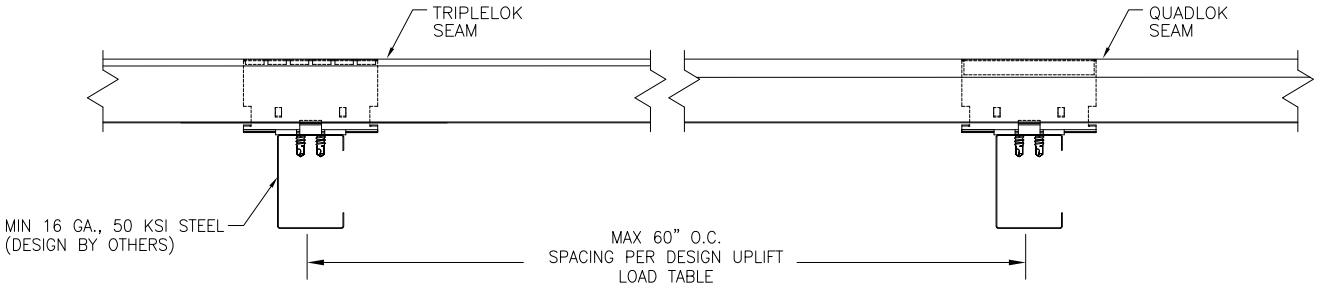

TYPICAL SIDE VIEW

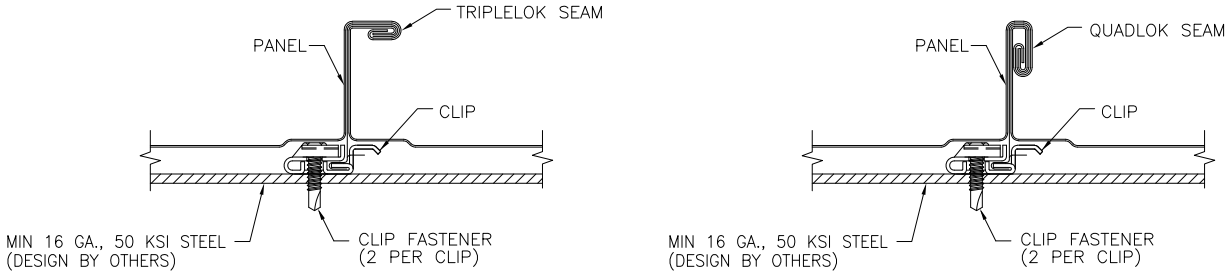

CLIP SECTION VIEW

DETAIL 1

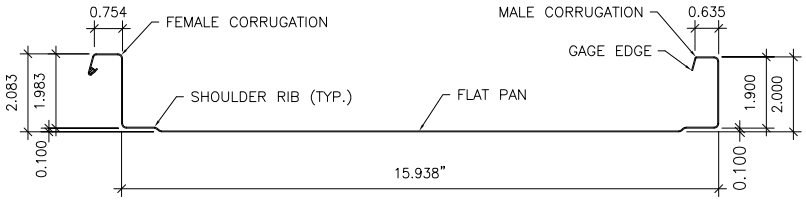

PANEL SECTION

(24 OR 22 GA.)

GENERAL NOTES:

1. STRUCTURAL ROOF PANEL HAS BEEN DESIGNED IN ACCORDANCE WITH FLORIDA BUILDING CODE (FBC).
2. ROOF PANELS SHALL BE 24 GA. (t = 0.022") OR 22 GA. (t = 0.028"). EFFECTIVE COVERING WIDTH OF PANEL = 16".
3. THE ROOF PANELS SHALL BE INSTALLED OVER STRUCTURE AS SPECIFIED ON THIS DRAWING.
4. REQUIRED DESIGN WIND LOADS SHALL BE DETERMINED FOR EACH PROJECT. THIS PANEL SYSTEM MAY NOT BE INSTALLED WHEN THE REQUIRED DESIGN WIND LOADS ARE GREATER THAN THE ALLOWABLE DESIGN LOADS.
5. CLIPS AND FASTENERS MUST BE IN ACCORDANCE WITH THIS DRAWING & FLORIDA BUILDING CODE. IF A DIFFERENCE OCCURS BETWEEN THE MINIMUM REQUIREMENTS OF THIS DRAWING & THE CODE, THE CODE SHALL CONTROL.
6. PURLINS/JOISTS/TRUSSES MUST BE DESIGNED TO WITHSTAND WIND LOADS AS REQUIRED FOR EACH APPLICATION AND ARE THE RESPONSIBILITY OF OTHERS.

DRAWN BY: B.S.	CHECKED BY: K.S.
PLOT:	DATE: 8/24/2023

NO.	REVISION DESCRIPTION	BY	DATE

DRAWING TITLE
ALLIANCE STEEL 216 PANEL

MANUFACTURER
ALLIANCE STEEL INC.
3333 SOUTH COUNCIL ROAD
OKLAHOMA CITY, OK 73179-4410
405 745 7500

CONSULTANTS
BALA SOCKALINGAM, PH.D., P.E.
1216 N LANSING AVE, SUITE C
TULSA, OK 74106
PHONE: 918-492-5992 FAX: 866-366-1543

DRAWING NO. 2682-1 REV.

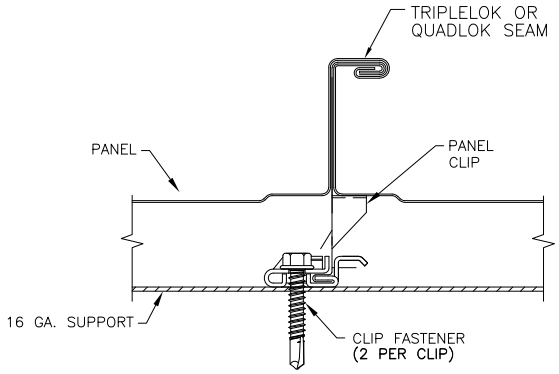

CLIP SECTION VIEW

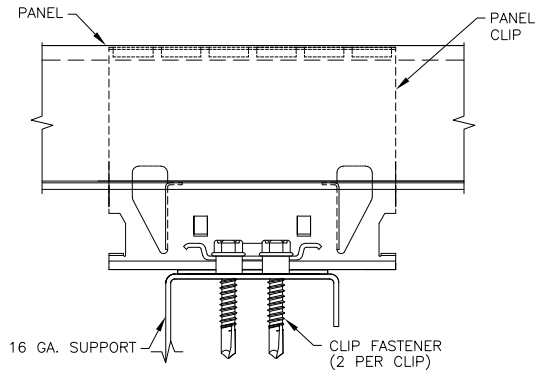

CLIP SIDE VIEW

MC 1200 SERIES CLIP

MC 1203, MC 1213 (SHOWN)

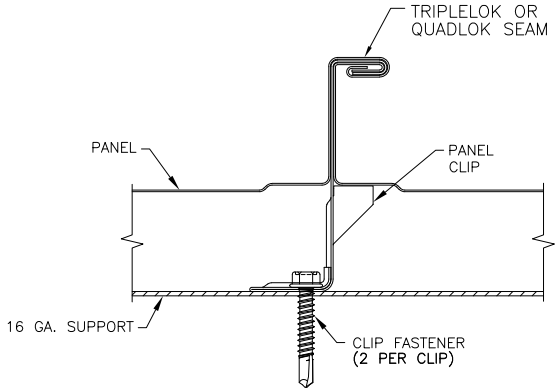

CLIP SECTION VIEW

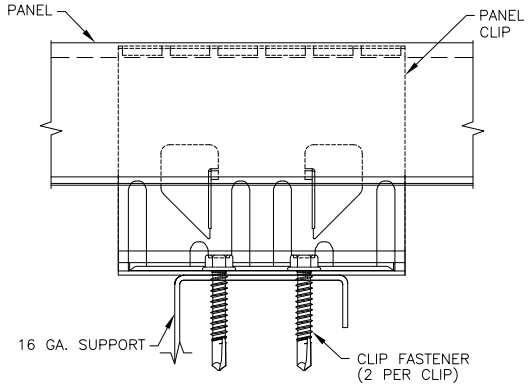

CLIP SIDE VIEW

FC 11200 SERIES CLIP

FC11200, FC 11203, FC 11213 (SHOWN)

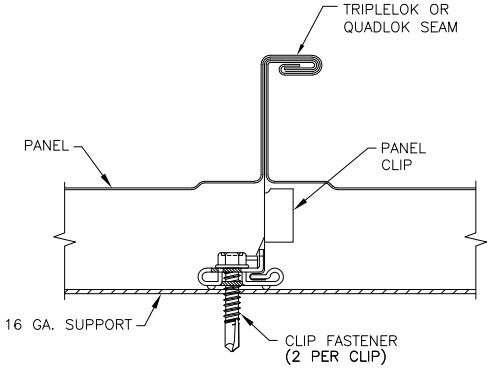

CLIP SECTION VIEW

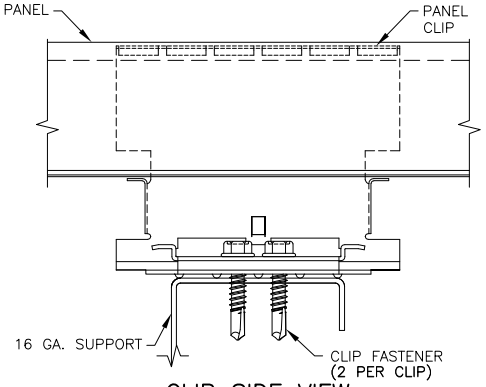

CLIP SIDE VIEW

MPS 1200 SERIES CLIP

MPS 1203, MPS 1213 (SHOWN), MPS 1220

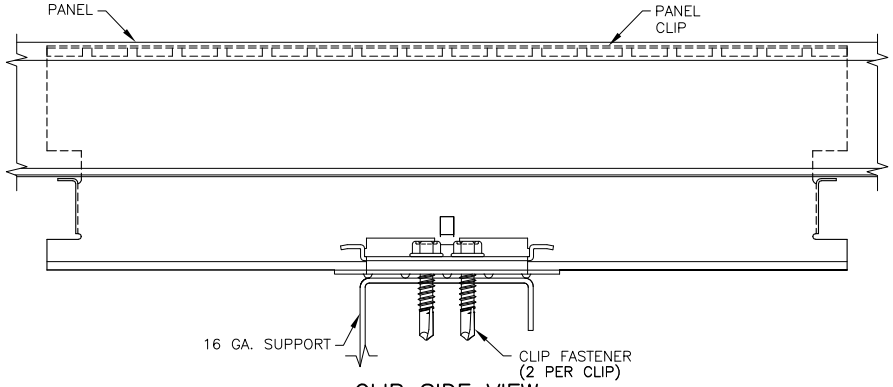

CLIP SIDE VIEW

MPW 1200 SERIES CLIP

MPW 1203–12, MPW 1213–12 (SHOWN)

DRAWN BY: B.S.	CHECKED BY: K.S.
PLOT:	DATE: 8/23/2023

NO.	REVISION DESCRIPTION	BY	DATE

DRAWING TITLE: ALLIANCE STEEL 216 PANEL

MANUFACTURER: ALLIANCE STEEL INC.
3333 SOUTH COUNCIL ROAD
OKLAHOMA CITY, OK 73179-4410
405 745 7500

CONSULTANTS: BALA SOCKALINGAM, PH.D., P.E.
1216 N LANSING AVE, SUITE C
TULSA, OK 74106
PHONE: 918-492-5992 FAX: 866-366-1543

DRAWING NO. 2682-1 REV.

PAGE NO. 2 OF 2

ALLIANCE STEEL INC.
Min. 24 Ga. Alliance Lok 216 Panel Uplift Loads
With MC 1200 or FC 11200 Series Clips

Seam	Span (ft)	Ultimate Load (psf)	Design Load (psf)
TripleLok™	**2**	**232.3**	**136.4**
	2.5		113.3
	3		94.4
	3.5		80.9
	4		70.8
	4.5		62.9
	5	**96.5**	**56.6**
QuadLok™	**2**	**326.1**	**191.3**
	2.5		157.6
	3		131.4
	3.5		112.6
	4		98.5
	4.5		87.6
	5	**134.7**	**78.8**

Notes:

1. The allowable uplift loads were determined from ASTM E1592 testing and are applicable for the panel and panel to clip connection. Clip fastener, purlin, frames and support connections must be designed to resist all loads imposed on the panel.
2. The factor of safety was determined in accordance with the procedures of Section I6.3.1, K2.1.1 and K2.1.2 of the AISI S100-16(2020) w/S2-20. The factor of safety for the following tests:
   2' 0" span with TripleLok™ Seam = 1.703
   5' 0" span with TripleLok™ Seam = 1.704
   2' 0" span with QuadLok™ Seam = 1.705
   5' 0" span with QuadLok™ Seam = 1.709
3. Panels must be installed as per Evaluation Report FL 41984.1 and Alliance Steel current installation procedure.
4. MC 1200 Series Clip: MC 1203, MC 1213 & FC 11200 Series Clip: FC11200, FC 11203, FC 11213
5. Three or more spans condition.

1216 N Lansing Ave., Suite C
Tulsa, Ok 74106
918 492 5992

Bala Sockalingam, Ph.D., P.E.
FL 62240

ALLIANCE STEEL INC.
Min. 24 Ga. Alliance Lok 216 Panel Uplift Loads
With MPS 1200 Series Clips

Seam	Span (ft)	Ultimate Load (psf)	Design Load (psf)
TripleLok™	**2**	**358.4**	**210.6**
	2.5		183.9
	3		153.3
	3.5		131.4
	4		115.0
	4.5		102.2
	5	**156.7**	**92.0**
QuadLok™	**2**	**400.0**	**235.0**
	2.5		196.5
	3		163.7
	3.5		140.3
	4		122.8
	4.5		109.2
	5	**167.5**	**98.2**

Notes:

1. The allowable uplift loads were determined from ASTM E1592 testing and are applicable for the panel and panel to clip connection. Clip fastener, purlin, frames and support connections must be designed to resist all loads imposed on the panel.
2. The factor of safety was determined in accordance with the procedures of Section I6.3.1, K2.1.1 and K2.1.2 of the AISI S100-16(2020) w/S2-20. The factor of safety for the following tests:
   2' 0" span with TripleLok™ Seam = 1.702
   5' 0" span with TripleLok™ Seam = 1.704
   2' 0" span with QuadLok™ Seam = 1.702
   5' 0" span with QuadLok™ Seam = 1.705
3. Panels must be installed as per Evaluation Report FL 41984.1 and Alliance Steel current installation procedure.
4. MPS 1200 Series Clip: MPS 1203, 1213
5. Three or more spans condition.

1216 N Lansing Ave., Suite C
Tulsa, Ok 74106
918 492 5992

Bala Sockalingam, Ph.D., P.E.
FL 62240

ALLIANCE STEEL INC.
Min. 24 Ga. Alliance Lok 216 Panel Uplift Loads
With MPW 1200 Series Clips

Seam	Span (ft)	Ultimate Load (psf)	Design Load (psf)
TripleLok™	**2**	**315.0**	**185.1**
	2.5		164.2
	3		136.8
	3.5		117.3
	4		102.6
	4.5		91.2
	5	**139.7**	**82.1**

Notes:

1. The allowable uplift loads were determined from ASTM E1592 testing and are applicable for the panel and panel to clip connection. Clip fastener, purlin, frames and support connections must be designed to resist all loads imposed on the panel.
2. The factor of safety was determined in accordance with the procedures of Section I6.3.1, K2.1.1 and K2.1.2 of the AISI S100-16(2020) w/S2-20. The factor of safety for the following tests:
   2' 0" span with TripleLok™ Seam = 1.702
   5' 0" span with TripleLok™ Seam = 1.702
3. Panels must be installed as per Evaluation Report FL 41984.1 and Alliance Steel current installation procedure.
4. MPW 1200 Series Clip: MPW 1203-12, MPW 1213-12
5. Three or more spans condition.

1216 N Lansing Ave., Suite C
Tulsa, Ok 74106
918 492 5992

Bala Sockalingam, Ph.D., P.E.
FL 62240