ENGINEERING EXPRESS®

ENGINEERINGEXPRESS.COM | (954) 354-0660
POSTAL ADDRESS:
2234 NORTH FEDERAL HWY #7664
BOCA RATON, FL 33431

Performance Evaluation

Florida Statewide Product Approval (FSA) # FL 41849.1
Engineering Express Project # 23-68364
THIS DOCUMENT CONTAINS (11) PAGES.

EVALUATION SUBJECT: **KD610-750 SOUND LEVEL 2 & 3 ALUMINUM ENCLOSURES** FL # 41849.1

REPORT HOLDER:
DISCOVERY ENERGY, LLC.
200 TWIN OAKS ROAD
KOHLER, WI 53044, USA

KOHLER®

(SEE ENCLOSURE DEPICTIONS NEXT PAGE)

SCOPE OF EVALUATION (compliance with the following codes):

THIS IS A STRUCTURAL (WIND) PERFORMANCE EVALUATION ONLY. NO ELECTRICAL OR TEMPERATURE PERFORMANCE RATINGS OR CERTIFICATIONS ARE OFFERED OR IMPLIED HEREIN.
UNDER NO CIRCUMSTANCE DOES THIS PERFORMANCE EVALUATION GUARANTEE, IMPLY, OR STATE PERFORMANCE OF THE UNIT IS MAINTAINED DURING OR AFTER A DESIGN EVENT.

This Performance Evaluation is being issued in accordance with the requirements of the Florida Building Code Eighth Edition (2023) per ASCE 7, FBC Building Ch. 16, FBC Building Sections 104.11, 453.25.5 & 1522.2, FBC Existing Building Sections 707.1 & 707.2, FBC Mechanical 301.15, FBC Residential M1202.1 & M1301.1, FS 471.025. The product noted in this report has been tested and/or evaluated as summarized herein.
This Performance Evaluation Report is also in accordance with the requirements of the Florida Department of Business and Professional Regulation (Florida Building Commission) Rule Chapter 61G20-3.005 F.A.C., for statewide acceptance per Method 1 (d). Re-evaluation of the product shall be required following the pertinent Florida Building Code or ASCE Standard modifications or revisions. The product noted in this report has been tested and/or evaluated as summarized herein.

SUBSTANTIATING DATA:

• Product Evaluation Documents (Test Reports)
Substantiating documentation has been submitted to provide this performance evaluation and is summarized in the sections below.

Test Reports: i4190.01-109-18-r0, i4981.02-109-18-r0, i4981.03-109-18-r1, i4981.04-109-18-r0, i7639.01-109-18-r1, & i8180.01-109-18-r0, all tests by Intertek.

• Structural Engineering Calculations and Testing
Product testing and structural engineering calculations have been prepared which evaluate the product based on:

1. Rational analysis to qualify the following design criteria:
   - Maximum-rated wind pressures via "Other Structures" wind methodology (ASCE 7, Chapter 29).
   - Structural component connection integrity, verified by a unity check between tension and shear.
   - Unit integrity via Finite Element Analysis.
   - Anchorage integrity for unit, tank, and I-beam connections as specified herein.
2. Comparative analysis (per FBC Building Section 1709.5.1) to qualify the following design criteria:
   - Maximum Missile Impact Rating per TAS 201 – Level "E"
   - Maximum Cyclic Wind Pressures per TAS 203 & Table 1625.4, as shown under "Structural Performance" section on this page.

Calculation summary is included in this product evaluation and appears herein.

LIMITATIONS & CONDITIONS OF USE:
Use of the product(s) listed herein shall be in strict accordance with this product evaluation as noted herein and manufacturer-provided model specifications. Installation shall conform to the minimum standards stated in the referenced building code(s) in addition to the specifications and limitations stated herein. See herein for complete limitations & conditions of use.

OPTIONS:
This evaluation is valid for the models described herein. This evaluation includes standard product only. Contact Kohler for Engineering Special (ES) orders. The critical unit designs have been determined and used in this evaluation. Any structural changes outside of the design as described herein would void this certification.

STRUCTURAL PERFORMANCE:

Maximum Rated Wind Pressures*:
± 61 psf Lateral, 49 psf Uplift

Maximum pressure rating determined based on the design parameters of: Vult = 200 mph, Exposure D, flat terrain, at-grade.

Models referenced herein are subject to the following design limitations:
- Required design wind pressures shall be determined on a site-specific basis in accordance with ASCE 7 and applicable sections of the building code(s) being referenced in accordance with ASD methodology.
- Required design pressures shall be less than or equal to the maximum pressures listed herein.
- *Maximum Rated Wind Pressures indicate the maximum pressures that all units listed herein are approved for. Valid for at-grade applications only. See limitations herein.
- Valid for use inside and outside the High-Velocity Hurricane Zone (HVHZ).
- Site-specific wind analysis may produce alternate limitations provided maximum rated wind pressures stated herein are not exceeded.

Maximum Allowable Cyclic Wind Pressures	Maximum Missile Impact Rating:
Wall Panels/Doors/Louvers: ± 39 psf Roof Panels: ± 60 psf	Missile Level "E"

VISIT ECALC.IO/KOHLER
FOR MORE INFORMATION AND DEVIATIONS TO THIS EVALUATION OR SCAN THE QR CODE TO THE RIGHT >

Engineer Signature & Seal:

FRANK L. BENNARDO LICENSE No 0046549 STATE OF FLORIDA PROFESSIONAL ENGINEER

Digitally signed by Frank Bennardo
Date: 2024.07.03 09:27:16 -04'00'

July 2, 2024

Frank Bennardo, P.E.
ENGINEERING EXPRESS®
FL PE #0046549 FLCA #9885

ENCLOSURE DEPICTIONS

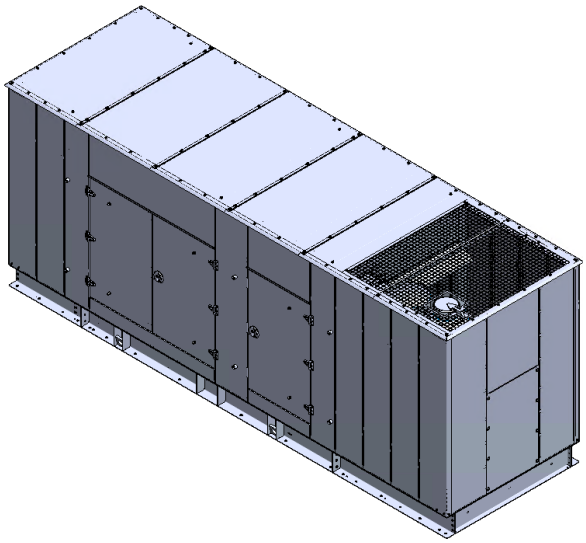

1 SOUND LEVEL 2 ENCLOSURE
SCALE: NTS LEFT-FRONT ISO VIEW

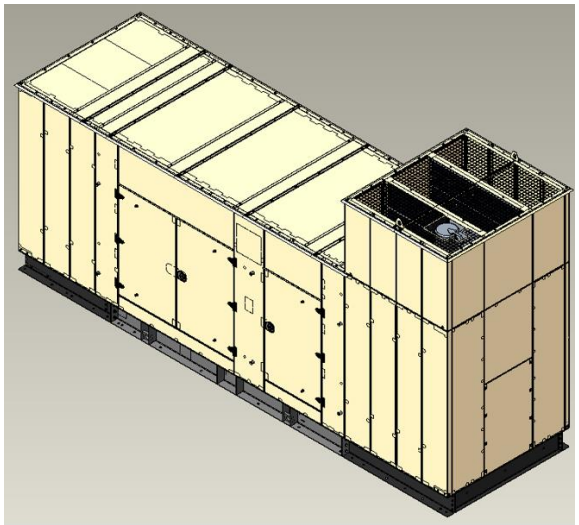

2 SOUND LEVEL 3 ENCLOSURE
SCALE: NTS LEFT-FRONT ISO VIEW

NOTE: THE GRAPHICAL DEPICTIONS IN THIS REPORT ARE FOR ILLUSTRATIVE PURPOSES ONLY AND MAY DIFFER IN APPEARANCE.

The difference in enclosure designs between SL2 and SL3 is the elevated discharge section included on SL3, located toward the right end of the enclosure. Outside of this section and its attachment to the main body of the enclosure, the enclosure and skid designs were considered identical. For further information on the enclosure designs beyond what is provided herein, please contact the Report Holder.

EVALUATION SUMMARY

Engineering Express has reviewed the design requirements per the referenced building code and ASCE 7 for the structural integrity of the Kohler aluminum enclosure with steel skid to withstand the maximum uniform static wind pressures, Missile Level “E” large missile impacts, and maximum cyclic wind pressures stated herein. The analysis forming the basis of this certification includes the unit framing and housing only and requires a permanent near-grade (non-rooftop) attachment to a concrete, metal, or wood host structure as certified/verified by others. Steel skid tie-down anchor locations shall conform to the Kohler documentation referenced herein. Additionally, the unit shall not be installed in a location susceptible to channeling effects from upwind obstacles. It shall be the installer’s responsibility to ensure that the criteria for the unit housing integrity, as listed above, is applicable for use at the location of installation and that the mounting method meets or exceeds the requirements of the local code and it is approved by the appropriate local authority prior to installation.

This certification is intended to certify the structural capacity and integrity of the structural framing members, wall and roof sheet metal skins, generator skid, and internal structural connections only for the aluminum enclosures listed herein to resist the stated maximum uniform static wind pressures, Missile Level “E” large missile impacts, and maximum cyclic wind pressures stated herein. Design of the generator itself, mechanical designs, energy/electrical criteria, generator slab support, accompanying anchorage components not specified herein, and all non-structural items shall be verified by others and are outside the scope of this certification. Upon analysis of the aluminum housing unit vs. the critical design loads illustrated herein, this engineer has concluded that the aluminum housing enclosure provides adequate resistance to the stated maximum uniform static wind pressures. Upon review of the results shown on the referenced test reports and comparative analysis to the tested enclosures referenced in said test reports, this engineer has concluded that the aluminum housing enclosure provides adequate resistance to the specified missile impact and cyclic loads.

All installation work shall follow the minimum requirements of the referenced building code in addition to any additional site-specific requirements not covered by this evaluation. Except as expressly provided herein, no additional affirmations are intended.

The enclosures’ deformation after a design event is a serviceability element. Testing showed that deformations are present; however, such deformations did not cause the components to detach, dislodge, or otherwise separate from the assembly. Moreover, no critical component limit was reached due to the resultant deflection.

STRUCTURAL ENGINEERING CALCULATIONS: UNIFORM STATIC WIND LOADING (CONTINUED NEXT PAGE)

Structural engineering calculations have been prepared which evaluate the aluminum unit housing based on rational analysis using Finite Element Analysis (FEA) to qualify the following design criteria:

1. Maximum allowable (ASD) design pressures, as evaluated below:

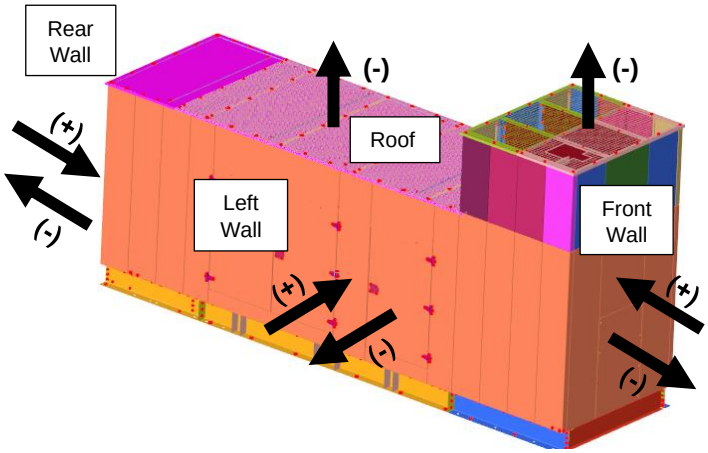

3 STATIC WIND LOAD DIAGRAM
SCALE: NTS LEFT-FRONT ISO VIEW

Load Case	Lateral Wind Loading		Uplift Wind Loading	
	Wind Pressure, psf (x 10^{-3} MPa)	Acting On:	Wind Pressure, psf (x 10^{-3} MPa)	Acting On:
1	+ 61 (+ 2.921)	Left Wall	- 49 (- 2.346)	Roof
2	- 61 (- 2.921)	Left Wall	- 49 (- 2.346)	Roof
3	+ 61 (+ 2.921)	Front Wall	- 49 (- 2.346)	Roof
4	- 61 (- 2.921)	Front Wall	- 49 (- 2.346)	Roof
5	+ 61 (+ 2.921)	Rear Wall	- 49 (- 2.346)	Roof
6	- 61 (- 2.921)	Rear Wall	- 49 (- 2.346)	Roof

The arrows shown in Detail 3 represent wind pressures acting on the unit. The direction of loading is shown in parentheses adjacent to the arrow. For lateral wind loading, wind pressure acts either positively, "pushing" inwards into the wall of interest, or negatively, "pulling" outwards in suction on the wall of interest. For uplift wind loading, wind pressure acts upwards, "pulling" the roof panels in suction, and are designated as negative wind loads.

FEA was performed on the worst-case enclosure design, which this office considers to be the SL3 enclosure (the elevated discharge section on SL3 provides additional surface area subject to wind loading, resulting in higher wind loads). In accordance with ASCE 7, Chapter 29, "Other Structures" wind methodology: wind loading is considered as a lateral wind pressure acting on the entire projected surface area of the enclosure wall of interest (including the elevated discharge section) and a concurrent uplift wind pressure acting on the entire projected surface area of the roof (including the elevated discharge section). Multiple load cases were evaluated to consider positive and negative lateral wind loads acting on each side of the unit to provide a collective unit integrity certification. Lateral loading on the Right Wall of the enclosure was purposefully omitted, as the Right Wall of the enclosure is fully symmetric with the Left Wall, and thus, can be qualified by evaluation of the Left Wall. Acting wind pressures in each load case are tabulated in the above-right table.

2. Maximum nominal unit dimensions:

Ass'y	SL2 Dimensions, in (mm)			SL3 Dimensions, in (mm)		
	L	W	H	L	W	H
Elevated Discharge	N/A	N/A	N/A	63 (1600)	75 (1905)	39 (991)
Main Body	248 (6299)	75 (1905)	89 (2261)	263 (6680)	75 (1905)	89 (2261)
Skid	248 (6299)	75 (1905)	10.25 (260)	263 (6680)	75 (1905)	10.25 (260)
TOTAL	248 (6299)	75 (1905)	99.25 (2521)	263 (6680)	75 (1905)	138.25 (3511)

For exact assembly dimensions, consult the respective drawing / files listed in the "Units Included" section herein. "L" = length, "W" = width, "H" = "height". Note: SL2 is composed of the Main Body and Skid assemblies only, while SL3 is composed of the Elevated Discharge, Main Body, and Skid assemblies.

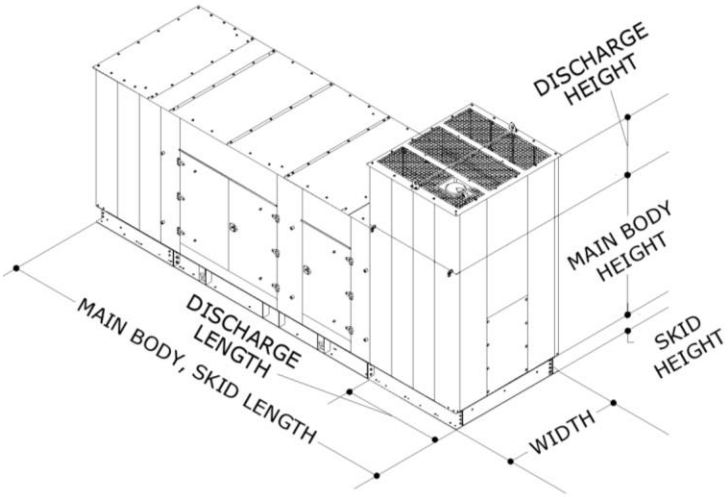

4 UNIT DIMENSIONS
SCALE: NTS LEFT-FRONT ISO VIEW

STRUCTURAL ENGINEERING CALCULATIONS: UNIFORM STATIC WIND LOADING, CONTINUED

3. Permissible net weight range:
   The total combined unit net weight (enclosure, skid, and genset) shall be between 12,000 lb and 16,000 lb (5,443 kg – 7,257 kg). Tank dry weight shall be between 4,000 and 18,000 lb (1,814 kg – 8,165 kg). Weights outside of this range shall be approved by this office.

4. Connection capacities:
   Connection capacities, including bolted and welded components, have been checked for applicable tension and shear by applying a unity interaction equation where applicable and have been approved by this office.

5. Material capacities:
   The capacities of the considered enclosure and skid components have been analyzed for yield and ultimate tensile stresses using Von Mises stress criteria in accordance with the current editions of the Aluminum Design Manual & AISC Steel Construction Manual.. For all load cases, Von Mises stresses were below the ultimate tensile stresses of the respective materials; therefore, the enclosure and skid will provide enough structural capacity to resist the wind pressures shown. Upon thorough review of the results, it is the opinion of this engineer that the results satisfactorily indicate that the enclosure and skid provide adequate resistance to the maximum rated wind pressures stated herein. Due to the close similarity in enclosure design, it is the opinion of this engineer that the satisfactory results on the SL3 enclosure also qualify the SL2 enclosure.

UNIT ELEVATIONS

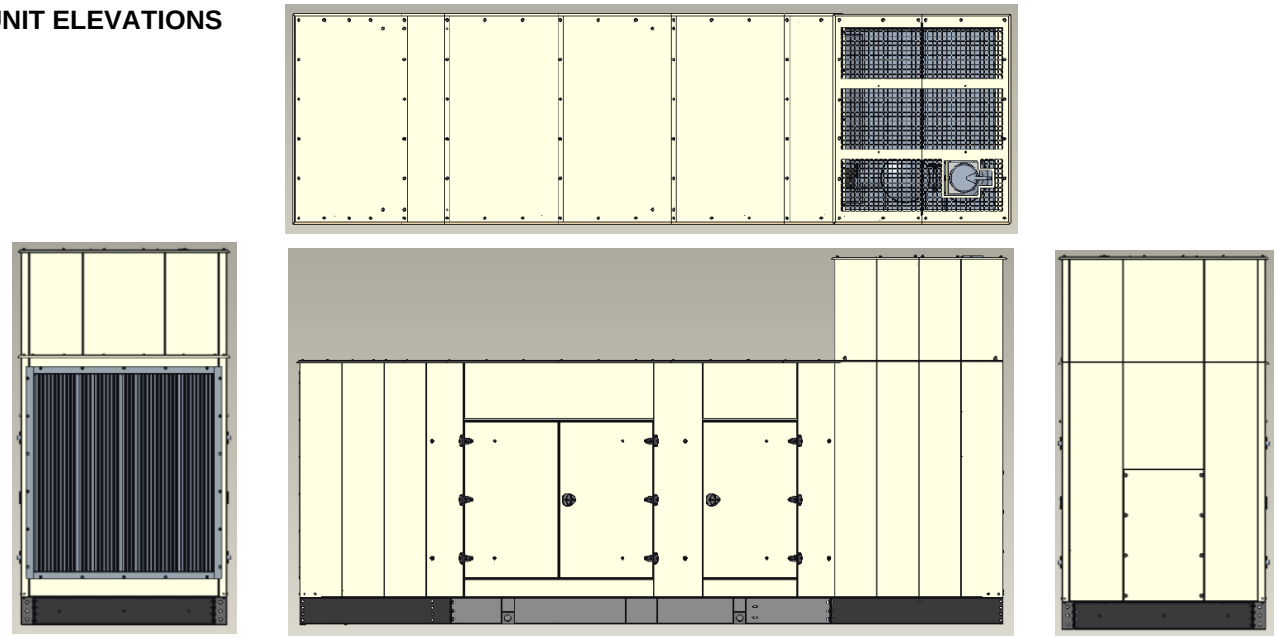

5 UNIT ELEVATIONS
SCALE: NTS MULTIPLE VIEWS

Unit elevations shown above depict the SL3 enclosure. Views, as labeled in this report, are as follows, clockwise from Top: Top View of Roof, Front Wall, Left Wall, Rear Wall. The Right Wall is not shown but is considered fully symmetric with Left Wall. Enclosure housing must bear the official insignia of Kohler with the model name referenced herein for this evaluation to be valid and applicable.

UNIT MATERIALS

Both SL2 and SL3 units are constructed with: 1/8" (3.175 mm) thick aluminum 5052-H32 roof and wall panels and 1/4" (6 mm) thick steel ASTM A36 for bottom skid. *Note: certain skid and silencer components are permitted to be ASTM A1011 steel of varying thickness; see enclosure documentation for more information.* Structural components are secured with 3/16" Ø IFI-114 Gr. 50 pop rivets, 1/4" Ø low carbon steel self-tapping screws, M5-M6 Class 4.8 machine screws, M8 ASTM A1011 hex head bolts, and M9-M16 Class 8.8 hex head bolts U.N.O. See Kohler documentation for specific fastener locations (See files listed in the "Units Included" section herein).

RETROFITS TO ALUMINUM ENCLOSURE FOR IMPACT & CYCLIC CERTIFICATION

The enclosures listed herein shall be retrofitted according to the 3D models "114010848xx-ka1_col_asm" for SL2 enclosures and "114010848-ka2_col_asm" for SL3 enclosures per the manufacturer – see files listed in the "Enclosure Models Included" section herein. Contact manufacturer for the retrofit Bill of Materials. The details shown in this section are for reference only and do not depict all required retrofits/specifications.

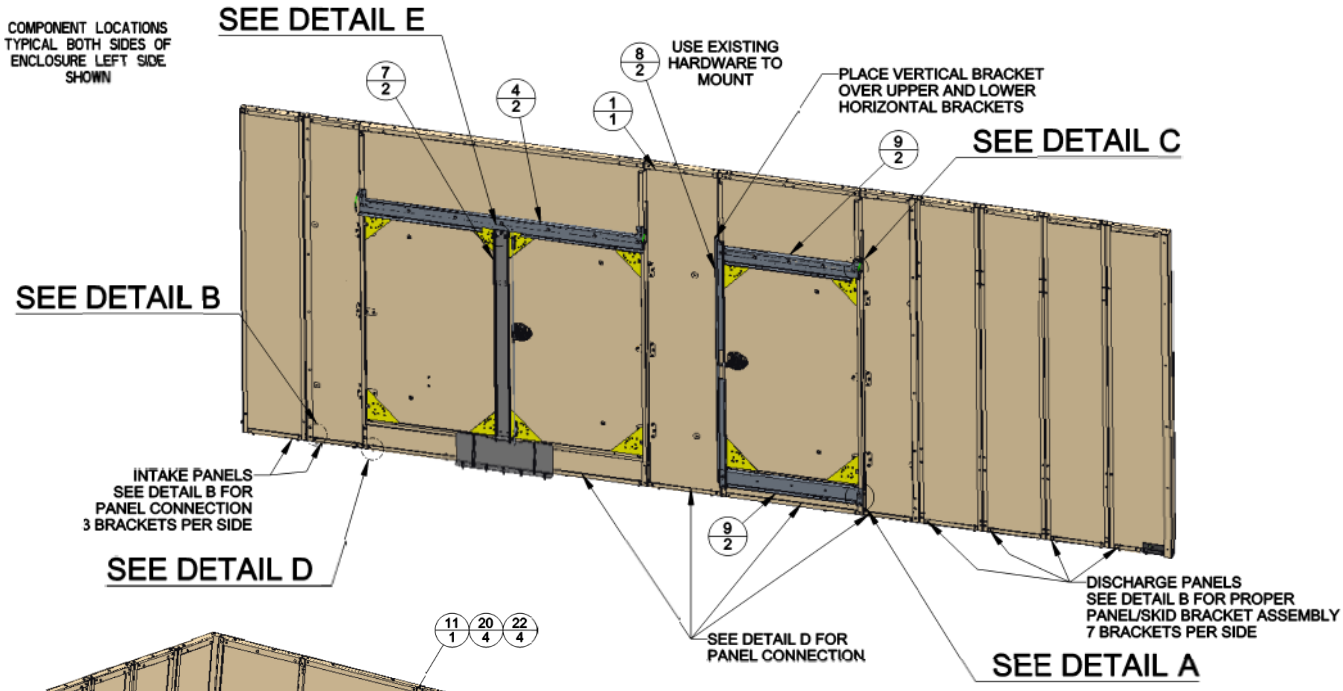

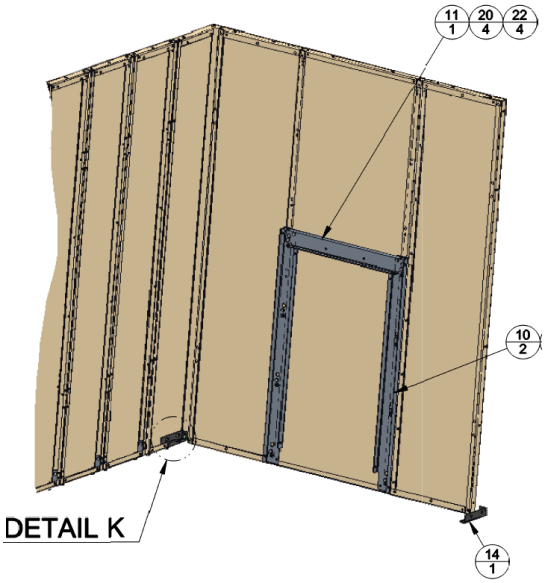

ACCESS PANEL SUPPORT

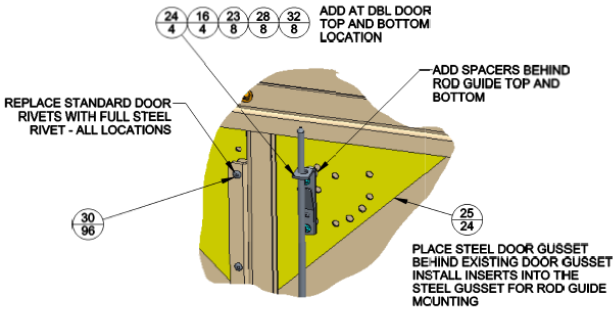

DETAIL I
SCALE 0.200

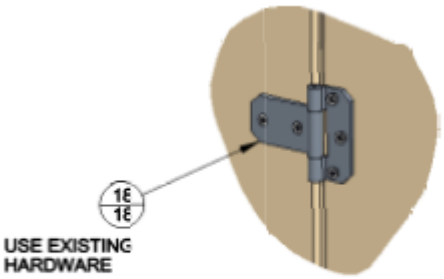

DETAIL J
SCALE 0.150

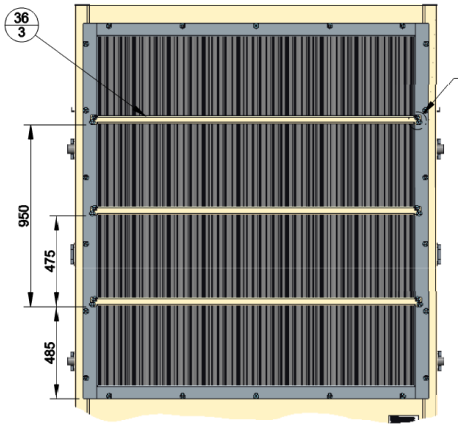

INTAKE LOUVER FRONT

UNITS INCLUDED

Enclosure Model	Genset Model	Enclosure File Number	Revision (if Applicable) & Date	ADV	Revision (if Applicable) & Date
KD600-750 Sound Level 2 Aluminum Enclosure	KD600-750	114010850XX-KA1	Rev "A" 05/25/21	ADV-9222	Rev "B" 02/28/23
KD600-750 Sound Level 3 Aluminum Enclosure	KD600-750	114010850XX-KA2	Rev "A" 05/25/21	ADV-9222	Rev "B" 02/28/23
KD600-750 Sound Level 3 Aluminum Discharge Section	KD600-750	114010854XX-MP1	Rev "-" 05/25/21	ADV-9222	Rev "B" 02/28/23

FUEL TANKS INCLUDED (ANCHORAGE CERTIFICATION ONLY)

Fuel Tank	Fuel Tank Dimensions [in] (mm)			Dry Weight [lb] (kg)	Gallons (Liters)	Fuel Tank File Number	Revision (if Applicable) & Date	Fuel Tank Drawing	Revision & Date
	Width	Depth	Height						
<550 Gallon - State -	277.4 (7046)	74.8 (1900)	13 (330)	4530 (2055)	550 (2081)	10503023700-KA1	03/14/22	105030196XX	Rev "-" 04/02/21
24Hr. - Standard -	247.3 (6280)	74.8 (1900)	24 (610)	5700 (2585)	1275 (4829)	10503023700-KA3	03/14/22	105030190XX	Rev "-" 10/20/20
24Hr. - State -	277.4 (7046)	74.8 (1900)	24 (610)	5855 (2656)	1279 (4841)	10503023700-KA4	03/14/22	105030206XX	Rev "-" 04/02/21
48Hr. - Standard -	247.3 (6280)	102 (2590)	33 (838)	10103 (4583)	2520 (9539)	10503023700-KA5	03/14/22	105030211XX	Rev "-" 04/02/21
48Hr. - State -	277.4 (7046)	102 (2590)	31 (787)	10694 (4851)	2530 (9577)	10503023700-KA6	03/14/22	105030216XX	Rev "-" 02/12/21
72Hr. - State -	295.3 (7500)	119.9 (3045)	36 (914)	13420 (6087)	3785 (14327)	10503023700-KA7	03/14/22	105030221XX	Rev "-" 01/02/21
96Hr. - State -	387.8 (9850)	119.9 (3045)	36 (914)	16435 (7455)	5025 (19021)	10503023700-KA8	03/14/22	105030226XX	Rev "-" 10/20/20

The fuel tanks listed above have not been evaluated for static wind loading, missile impact, or cyclic wind loading. The integrity of the tank itself is by others. Only the integrity of the designed anchorage connections is certified by this evaluation. See the following sections for anchorage specifications.

SEE NEXT PAGE FOR I-BEAM CONFIGURATION & ANCHOR DIRECTIVE

IN ALL CONDITIONS IT IS THE RESPONSIBILITY OF THE PERMIT HOLDER TO ENSURE THE HOST STRUCTURE IS CAPABLE OF WITHSTANDING THE RATED GRAVITY, LATERAL, AND UPLIFT FORCES BY SITE-SPECIFIC DESIGN. NO WARRANTY OF ANY KIND, EXPRESSED OR IMPLIED, IS OFFERED BY ENGINEERING EXPRESS AS TO THE INTEGRITY OF THE HOST STRUCTURE TO CARRY DESIGN FORCE LOADS INCURRED BY THIS UNIT.

I-BEAM CONFIGURATIONS INCLUDED (ANCHORAGE CERTIFICATION ONLY)

File Number	Revision (if Applicable) & Date	Description	Total # of I-Beams	Applicable For:
11307033200-KA1	Rev "-", 03/14/22	Top-Mounted I-Beams Configuration	6	48Hr Standard Fuel Tank
11307033200-KA2	Rev "-", 03/14/22	Top-Mounted I-Beams Configuration	6	48Hr State Fuel Tank
11307033200-KA3	Rev "-", 03/14/22	Top-Mounted I-Beams Configuration	6	72Hr & 96Hr State Fuel Tanks
GM117298	Rev "-", 10/29/21	Bottom-Mounted I-Beams (Drawing Summary)	varies	All State Fuel Tanks Herein
GM117298-KA1	Rev "-", 10/29/21	Bottom-Mounted I-Beams Configuration	6	<550 Gallon & 24Hr State Fuel Tanks
GM117298-KA3	Rev "-", 10/29/21	Bottom-Mounted I-Beams Configuration	6	48Hr State Fuel Tank
GM117298-KA4	Rev "-", 10/29/21	Bottom-Mounted I-Beams Configuration	6	72Hr State Fuel Tank
GM117298-KA5	Rev "-", 10/29/21	Bottom-Mounted I-Beams Configuration	7	96Hr State Fuel Tank

The I-beams present in the configurations listed above have not been evaluated for static wind loading. The integrity of the I-beams themselves is by others. Only the integrity of the designed anchorage connections is certified by this evaluation. See the following sections for anchorage specifications. "Top-mounted I-beams," abbreviated herein as "top I-beams," mount to the top of the fuel tank and serve as an intermediary for the unit skid-to-tank connections. "Bottom-mounted I-beams," abbreviated herein as "bottom I-beams," mount to the bottom of the fuel tank and serve as an intermediary for the tank-to-concrete connections. "Total # of I-beams" describes the total quantity of top or bottom I-beams employed in the configuration; (The quantity of I-beams included in each kit may differ so long as the total # of I-beams shown above are employed for the respective configuration and positioned according to the referenced file number).

ANCHORAGE DIRECTIVE

Fuel Tank		# of Thru-Bolts for Skid to Tank	Top I-Beam Directive: # of Thru-Bolts for:		Anchor Specifications					
Description	Capacity [Gallons] (Liters)		Skid to I-Beams	I-Beams to Tank	# of Anchors for Tank to Concrete	Anchor Brand & Name (Carbon Steel)	Ø [in] (mm)	Embed. [in] (mm)	Min. Edge Dist. [in] (mm)	Min. Conc. Thick. [in] (mm)
No Tank	N/A	N/A	N/A	N/A	12 min.	HILTI KWIK Bolt 3	3/4 (19)	6-1/2 (165)	6 (152)	10 (254)
<550 Gallon - State -	550 (2081)	22	N/A	N/A	22	HILTI KWIK Bolt 3	3/4 (19)	3-1/4 (165)	6 (152)	5 (127)
24Hr. - Standard -	1275 (4829)	22	N/A	N/A	20	HILTI KWIK Bolt 3	3/4 (19)	4-3/4 (115)	6 (152)	8 (204)
24Hr. - State -	1279 (4841)	22	N/A	N/A	22	HILTI KWIK Bolt 3	3/4 (19)	4-3/4 (115)	6 (152)	8 (204)
48Hr. - Standard -	2520 (9539)	N/A	12	24	18	HILTI KWIK Bolt 3	3/4 (19)	3-1/4 (165)	6 (152)	5 (127)
48Hr. - State -	2530 (9577)	N/A	12	24	18	HILTI KWIK Bolt 3	3/4 (19)	3-1/4 (165)	6 (152)	5 (127)
72Hr. - State -	3785 (14327)	N/A	12	24	20	HILTI KWIK Bolt 3	3/4 (19)	3-1/4 (165)	4-1/2 (114)	5 (127)
96Hr. - State -	5025 (19021)	N/A	12	24	22	HILTI KWIK Bolt 3	3/4 (19)	3-1/4 (165)	4 (102)	5 (127)

SEE FOLLOWING PAGES FOR ANCHORAGE DIRECTIVE CONTINUED AND ANCHORAGE NOTES

ANCHORAGE DIRECTIVE NOTES

The anchorage directive provided herein is applicable for the units, fuel tanks, and I-beam configurations listed in the previous sections. Anchorage specifications shall be determined in accordance with the specifications provided below.

For scenarios in which no fuel tank is used: The unit skid shall mount directly to the concrete using the minimum number of anchors with the specifications stated in the directive. Distribute the anchor quantities evenly between the skid long sides. For each long side: position the anchors at the prefabricated mounting holes, utilizing the mounting holes that position the anchors evenly spaced along the unit long side as much as is feasible. Refer to the respective enclosure ADV referenced herein for mounting hole locations. Skid anchoring flange shall be 3/16" min. thick and Fy = 36 ksi min. & Fu = 60 ksi min. galvanized steel.

For scenarios in which <550 gallon state, 24hr standard, or 24hr state fuel tanks are used: The unit skid shall mount directly to the fuel tank with the specified number of thru-bolts. Thru-bolts shall be M20 UNC GR.8.8 thru-bolts with 2" min. OD washers top and bottom, typ. Provide 1.5" min. edge distance from any edge of both members in contact (skid flange and tank flange). Members in contact shall be 3/16" min. thick Fy = 36 ksi min. & Fu = 60 ksi min. galvanized. steel. Refer to the associated Kohler documentation for thru-bolt locations.

For scenarios in which 48hr, 72hr, or 96hr state fuel tanks are used: The unit skid shall mount to the fuel tank using top I-beams as an intermediary. Refer to the associated Kohler documentation for top I-beam positioning for each fuel tank configuration. Skid flange, tank flange, and I-beam flanges shall all be 3/16" min. thick Fy = 36 ksi min. galvanized steel.

- For each top I-beam connection to the above skid, employ (2) M20 UNC GR. 8.8 steel thru-bolts with 2" min. OD washers top and bottom, (1) thru-bolt per side, typ. Provide 1.5" min. edge distance between the thru-bolt and any edge of the members in contact (skid flange and I-beam flange). Refer to the associated Kohler top I-beam configuration documentation for thru-bolt locations.
- For each top I-beam connection to the below tank, employ (4) M20 UNC GR. 8.8 steel thru-bolts with 2" min. OD washers top and bottom, (2) thru-bolts per side, typ. Provide 1.5" min. edge distance between the thru-bolt and any edge of the members in contact (I-beam flange and tank flange). Refer to the associated Kohler top I-beam configuration documentation for thru-bolt locations.

Read anchor specifications from the Anchorage Directive tables from left to right, which state: brand, name/type of anchor, nominal diameter, embedment, minimum edge distance to any edge of the concrete, minimum concrete thickness, and the total number of anchors, respectively. See sample Anchor Illustration below.

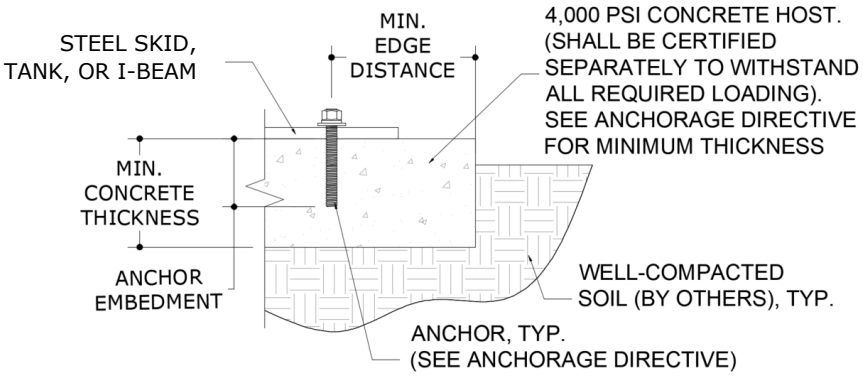

ANCHOR ILLUSTRATION
SCALE: NTS SECTION VIEW

Refer to Kohler's associated documentation and the "Wind Installation Requirements" section herein for additional installation instructions and directives.

SEE NEXT PAGE FOR BOTTOM-MOUNTED
I-BEAM ANCHORAGE SPECIFICATIONS (AS APPLICABLE)

ANCHORAGE DIRECTIVE CONTINUED: BOTTOM-MOUNTED I-BEAM ANCHORAGE

Fuel Tank		# of Bottom-Mounted I-Beams	# of Thru-Bolts for Skid to Bottom I-Beams	Anchor Specifications					
Description	Capacity [Gallons] (Liters)			# of Anchors for Bottom I-Beams to Concrete	Anchor Brand & Name (Carbon Steel)	Ø [in] (mm)	Embed. [in] (mm)	Min. Edge Distance [in] (mm)	Min. Concrete Thickness [in] (mm)
<550 Gallon - State -	550 (2081)	6	12	12	HILTI KWIK Bolt 3	3/4 (19)	6-1/2 (165)	6-1/2 (165)	10 (254)
24Hr. - State -	1279 (4841)	6	12	12	HILTI KWIK Bolt 3	3/4 (19)	6-1/2 (165)	6 (152)	10 (254)
48Hr. - State -	2530 (9577)	6	12	12	HILTI KWIK Bolt 3	3/4 (19)	6-1/2 (165)	6 (152)	10 (254)
72Hr. - State -	3785 (14327)	6	12	12	HILTI KWIK Bolt 3	3/4 (19)	6-1/2 (165)	5-1/2 (140)	10 (254)
96Hr. - State -	5025 (19021)	7	14	14	HILTI KWIK Bolt 3	3/4 (19)	4-3/4 (115)	6 (152)	8 (204)

ANCHORAGE DIRECTIVE NOTES: BOTTOM-MOUNTED I-BEAM ANCHORAGE

For tank anchorage to concrete, certain bottom-mounted I-beam configurations are permitted to be used as an intermediary between tank and concrete as opposed to mounting the tank directly to concrete. See “I-Beam Configurations Included” Section prior for approved bottom-mounted I-beam configurations in conjunction with which fuel tanks. Refer to referenced Kohler documentation for I-beam positioning for each configuration. I-beam top and bottom flanges and tank anchoring flanges shall be 3/16” min. thick and Fy = 36 ksi min. & Fu = 60 ksi min. galvanized steel.

- For each bottom I-beam connection to the above tank, employ (2) M20 UNC GR. 8.8 steel thru-bolts with 2” min. OD washers top and bottom, (1) thru-bolt per side, typ. Provide 1.5” min. edge distance between the thru-bolt and any edge of the members in contact (skid flange and I-beam flange). Refer to referenced Kohler documentation for thru-bolt locations.
- For each bottom I-beam connection to the below concrete, refer to the “Anchorage Directive: Bottom-Mounted I-beam Configurations” table for anchor specifications. (2) anchors per I-beam, (1) each end of I-beam, typ. Provide 18” min. spacing between anchors and 2” min. end distance between the anchor and the end of the I-beam. Refer to referenced Kohler documentation for anchor locations. Concrete by others shall be 4 ksi min.

See the previous page for directions on reading anchor specifications from the Anchorage Directive table. See the previous page for tank mount directly to concrete options and specifications.

SEE WIND INSTALLATION REQUIREMENTS NEXT PAGE

WIND INSTALLATION REQUIREMENTS

The product(s) listed above shall be installed in strict compliance with this Performance Evaluation & manufacturer-provided specifications. The product components shall be of the material specified in the manufacturer-provided product specifications. All screws, bolts, and rivets must be installed in accordance with the applicable provisions & anchor manufacturer's published installation instructions.

The following are requirements for wind-rated installation:

1. The design of post-installed anchors in concrete used for the component anchorage has been evaluated by this engineer for wind applications in accordance with ASCE 7 as referenced herein.
2. Anchors must be installed in minimum 4000 psi compressive strength normal weight concrete. Concrete aggregate must comply with ASTM C33. Installation in structural lightweight concrete is not permitted unless otherwise approved by the structural engineer of record.
3. Anchors must be installed to the torque specification as recommended by the anchor manufacturer to obtain full capacity.
4. Anchors must be installed in the locations specified in the respective Kohler documentation in correlation with signed and sealed engineering herein. The more stringent requirement from either document shall apply in cases of uncertainty.
5. Anchor plates from Kohler must be installed at each anchor location between anchor head and equipment for tension load distribution.
6. Concrete floor slab and concrete housekeeping pads must be designed, and rebar reinforced, for wind applications in accordance with ACI 318 and ASCE 7 as referenced herein
7. Unless noted otherwise herein, all housekeeping pad thicknesses must be designed in accordance with pre-qualification test report or a minimum of 1.5x the anchor embedment depth, whichever is largest.
8. All housekeeping pads must be doweled or cast into the building structural floor slab and designed for wind application per appropriate code requirements for the subject jurisdiction and as approved by the Structural Engineer of Record.
9. Floor-mounted equipment (with or without housekeeping pad) must be installed to a rebar reinforced structural concrete floor that is designed for wind applications and approved by the engineer of record to resist the added wind loads from components being anchored to the floor.
10. When installing to a floor, rebar interference must be considered.
11. Attaching equipment to any floor other than those constructed of structural concrete and designed to accept the wind loads from said equipment is not permitted by this specification and beyond the scope of this certification.
12. Wall-mounted and rooftop installations are not permitted by this evaluation and are beyond the scope of this certification.
13. Installation upon curbs shall be coordinated with the curb manufacturer and the Structural Engineer of Record.
14. Anchor locations, size, type, and load requirements shall be as specified on the certified installation specification. Mounting requirements details such as brand, type, embedment depth, edge spacing, anchor spacing, concrete strength, and special inspection must be outlined and approved by the project Structural Engineer of Record to withstand the wind anchor loads as defined on the certified installation specification. The installing contractor is responsible for the proper installation of all anchors and mounting hardware, observing the mounting requirement details specified herein or outlined by the Engineer of Record. Contact Kohler if a detailed Wind Installation Calculation Package is required.
15. Electrical wiring, piping, ductwork, and other connections to the equipment are the responsibility of the installing contractor. It is necessary that these remain intact and functional, and do not inhibit the functionality of the generator set after a wind event.
16. Concrete pad requirements specified herein are minimum values to satisfy only the anchor bolt requirements. The pad must be designed by the project structural Engineer of Record.

TERMINOLOGY

The following abbreviations may appear in this report: "Addtl." for "additional", "AHJ" for "Authority Having Jurisdiction", "alum" for "aluminum", "ASCE" for "American Society of Civil Engineers", "ASD" for "Allowable Stress Design", "ASTM" for "American Society for Testing and Materials", "EA." for "each", "E.D." for edge distance", "EDDS" for "extra deep drawing steel", "e.g." for "*exempli gratia*" or "for example", "equiv." for "equivalent", "FBC" for "Florida Building Code", "FEA" for "Finite Element Analysis", "FLCA" for "Florida Certificate of Authorization", "FS" for "Florida Statutes", "Fu" for "ultimate tensile strength" or "ultimate tensile stress", "Fy" for "yield strength" or "yield stress" "GA" for "gauge", "GR." or "Gr." for "grade", "HVAC" for "heating, ventilation, and air conditioning", "HVHZ" for "High-Velocity Hurricane Zone", "i.e. " for "*id est*" or "in other words", "in" for "inch", "lb" for "pound (force)", "max." for "maximum", "min." for "minimum", "mm" for "millimeter", "NTS" for "not to scale", "O.C. " for "on center", "OD" for "outer diameter", "pcf" for "pounds (force) per cubic foot", "PE" for "Professional Engineer", "qty" for "quantity", "SAE" for "Society of Automotive Engineering", "SMS" for "sheet metal screws", "SS" for "stainless steel", "TER" for "Technical Evaluation Report", "typ." for "typical", "ult" for "ultimate loads", "U.N.O." for "unless noted otherwise", "UTS" for "ultimate tensile strength" or "ultimate tensile stress", "WLL" for "working load limit", "w/o" for "without", "YS" for "yield strength" or "yield stress", "#" for "number", "&" for "and", and "Ø" for "diameter". Please visit ecalc.io/glossary for additional abbreviation clarifications.

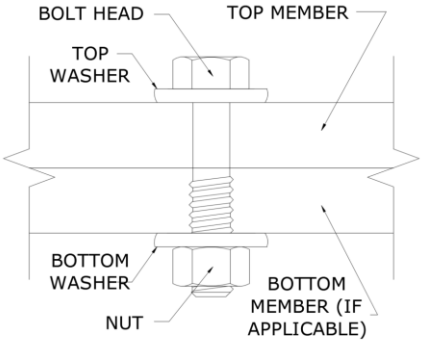

SAMPLE THRU-BOLT
SCALE: NTS SECTION VIEW

Note: The term "Thru-Bolt" or through bolt, if used herein, refers to a bolt passing through the member(s) in contact and is fastened by a nut at the end opposite the screw head. Nut shall be equivalent to or exceed the strength of the bolt U.N.O. Nut shall be sized to accommodate the same nominal diameter as the bolt U.N.O. See diagram above-right for a sample thru-bolt configuration.
Note: For instances herein which list material specifications as *"[material type] or stronger":*
U.N.O. herein, the term "stronger" refers to a material with a UTS value equal to or greater than the UTS value of the stated material type. Consult appropriate literature for established material UTS values.
Note: Equivalent steel gauge thicknesses as used in this evaluation, U.N.O., are as follows:
22 GA (.030"), 20 GA (.036"), 18 GA (.048"), 16 GA (.060"), 14 GA (.075"), 12 GA (.098").

LIMITATIONS & CONDITIONS OF USE, CONTINUED

Labeling: Enclosure housing must bear the official insignia of Kohler, with the model name referenced herein, for the applicability and validity of this evaluation.

Host Structure: The supporting host structure shall be designed to resist all superimposed loads as determined by others on a site-specific basis as may be required by the Authority Having Jurisdiction. No evaluation is offered for the host supporting structure by use of this document.

Production Drawings: The following drawings shall be accessible if required for a full permit application to be submitted to the Authority Having Jurisdiction in conjunction with this Performance Evaluation:

- Electrical schematic(s)
- Final assembly drawings and parts lists sufficient to detail primary components, operator controls, and their locations
- Complete set of mechanical drawings for all machined parts
- Complete part specifications (including manufacturer's model numbers, size, ratings, etc.) for all purchased parts
- Specification sheets for all parts/components
- Drawings showing all construction details
- Product label drawing(s) showing all required marking information. The label drawing shall show the proposed label location on the equipment and artwork showing the manufacturer's name, address, model and serial numbers, equipment ratings, warning markings.

Drawing and Change Control: The manufacturer shall establish a system of product configuration control that shall allow no unauthorized changes to the product. Changes to critical documents, identified in this Performance Evaluation, must be reported to, and authorized by, this office prior to implementation for production.

Survivability: This Performance Evaluation is valid for a newly installed unit and does not include certification of the product beyond a design event if impacted. Inspections shall be implemented during annual equipment maintenance or after a named storm; all fasteners and cabinet components are to be verified, and all damaged, loose, corroded and/or broken fasteners and cabinet components shall be replaced to ensure structural integrity against hurricane wind forces. Contact this office for any reevaluation needs as designated by the Authority Having Jurisdiction.

Durability: Components or component assemblies shall not deteriorate, crack, fail, or lose functionality due to galvanic corrosion or weathering. All supporting components which are permanently installed shall be protected against corrosion, contamination, and other such damage at all times. Each component or component assembly shall be supported and oriented in its intended installation position. All exposed plastic components shall be certified to resist sunlight exposure as specified by ASTM B117 or ASTM G155 in Broward or Miami-Dade counties.

Extent of Certification: As described above, this certification pertains to the structural integrity of the unit components listed herein, subject to the limitations and criteria stated herein. Operability and water infiltration are outside the bounds of this certification. No other certifications are intended. We do not guarantee non-structural performance during or after a design event due to other factors that could affect the operation of the unit in question without our site-specific consent.

Proj. #	Remarks	By	Checked	Date	Proj. #	Remarks	By	Checked	Date
20-33737	Original Project	EPR	RWN	12/19/22	23-68634	Change Address	MARH	EP/RW	06/21/24
23-68634	2023 FBC Submittal	EPR	EPR	10/22/23					