KAWNEER 8400TL FIXED WINDOW

GENERAL NOTES

1. THIS WINDOW SYSTEM HAS BEEN TESTED TO ASTM E283, ASTM E330, ASTM E331, ASTM E547, ASTM E1886, ASTM E1996, AND TAS 201/202/203, AND MEETS THE REQUIREMENTS OF THE FLORIDA BUILDING CODE (FBC), CURRENT EDITION, INCLUDING THE HIGH VELOCITY HURRICANE ZONE.
2. THE INSTALLED WINDOW SYSTEM SHALL BE FABRICATED, GLAZED, AND ANCHORED IN ACCORDANCE WITH THIS DRAWING AND APPLICABLE TEST REPORTS, OR AS INDICATED BY THE ENGINEER OF RECORD IN APPROVED SHOP DRAWINGS.
3. THIS DRAWING INDICATES VARIOUS APPROVED GLAZING METHODS AND FRAMING TYPES WHICH MAY BE USED SINGLY OR IN COMBINATION FOR EACH PROJECT. ANY NUMBER OF PANELS MAY BE USED HORIZONTALLY PROVIDED THE MAXIMUM DLO SIZES AS INDICATED IN THIS DRAWING ARE NOT EXCEEDED.
4. THIS PRODUCT IS LARGE AND SMALL MISSILE IMPACT RESISTANT (SEE APPROVED GLAZING TYPES SHEET 06 OF THIS DRAWING FOR GLAZING TYPES THAT ARE APPROVED FOR LARGE AND FOR SMALL MISSILE PERFORMANCE), AND DOES NOT REQUIRE THE USE OF APPROVED SHUTTERS IN WINDBORNE DEBRIS AREAS.
5. REQUIRED DESIGN PRESSURES SHALL BE DETERMINED FOR EACH PROJECT IN ACCORDANCE WITH APPLICABLE CODE REQUIREMENTS AND GOVERNING WIND SPEEDS FOR THE PROJECT LOCATION.
6. THE ALLOWABLE DESIGN PRESSURES AND LOAD CAPACITIES SHOWN IN THIS DRAWING ARE ALLOWABLE STRESS DESIGN (ASD) BASIS AND ARE AS LIMITED BY ASTM E-1300 GLASS TABLES AND TESTED PRESSURES ALTERNATE COMPARATIVE OR RATIONAL ANALYSIS CALCULATIONS COMPLIANT WITH FBC AS DEEMED APPROPRIATE ON A PROJECT BASIS BY THE ENGINEER OF RECORD ARE ACCEPTABLE.
7. DISSIMILAR MATERIALS THAT COME INTO CONTACT, INCLUDING BUT NOT LIMITED TO FASTENERS IN CONTACT WITH PRESSURE TREATED WOOD SUBSTRATES OR ALUMINUM, SHALL BE COATED OR OTHERWISE PROTECTED PER FBC REQUIREMENTS TO PREVENT CORROSION OR GALVANIC REACTIONS.
8. SEALING AND FLASHING STRATEGIES FOR OVERALL WATER INFILTRATION RESISTANCE OF THE INSTALLED PRODUCT IS NOT WITHIN THE SCOPE OF THIS APPROVAL AND SHALL BE THE RESPONSIBILITY OF OTHERS.
9. THE 4/3 ALLOWABLE STRESS INCREASE HAS NOT BEEN USED IN THE ANCHOR ANALYSIS FOR THIS SYSTEM. THE 1.6 Cd FACTOR WAS USED IN THE ANALYSIS OF WOOD SUBSTRATE.
10. STRUCTURAL INTEGRITY OF SUBSTRATE MATERIALS TO RECEIVE THE LOADS FROM THIS PRODUCT, AND INSTALLATION OF WOOD BUCKS OR OTHER ACCESSORIES TO THE SUBSTRATE, TO BE ENGINEERED BY OTHERS OR AS APPROVED BY THE AUTHORITY HAVING JURISDICTION.
11. THIS PRODUCT SHALL BE INSTALLED USING ONE OF THE APPROVED FASTENING METHODS INDICATED IN THIS DRAWING, AS APPROPRIATE FOR THE SUBSTRATE TYPE, OR AS INDICATED BY THE ENGINEER OF RECORD IN APPROVED SHOP DRAWINGS. ANCHOR SIZE, EMBEDMENT, EDGE DISTANCE, AND LOCATIONS, SHALL BE IN ACCORDANCE WITH THESE DRAWINGS OR AS INDICATED IN APPROVED SHOP DRAWINGS. THE ASSEMBLY AND INSTALLATION FASTENERS INDICATED IN THIS DRAWING ARE APPLICABLE FOR NON-COASTAL APPLICATIONS. IF THE PROJECT IS WITHIN 3000 FT OF A SALTWATER COASTLINE, THE FASTENERS SHALL BE EVALUATED FOR COMPLIANCE WITH FBC SECTION 1711. SEE EVALUATION REPORT FOR THIS APPROVAL FOR ADDITIONAL INFORMATION.
12. MINIMUM ANCHOR EMBEDMENTS LISTED IN THIS DRAWING SHALL BE BEYOND WALL DRESSING OR STUCCO AND FULLY INTO SUBSTRATE. LOAD-BEARING SHIMS SHALL BE USED AT ALL ANCHOR LOCATIONS WHERE A GAP OF MORE THAN 1/16" EXISTS BETWEEN THE PRODUCT AND OPENING SUBSTRATE. MAXIMUM SHIM GAP IS AS INDICATED IN THESE DRAWINGS.
13. SUBTRATES SHALL MEET THE MINIMUM STRENGTH REQUIREMENTS AS SHOWN IN TABLE 1 IN SECTION 6. CONCRETE OR MASONRY SUBSTRATES SHALL NOT BE CRACKED. FOR INSTALLATION TO METAL SUBSTRATES, ANCHORS SHALL BE LONG ENOUGH TO BE FULLY THREADED THROUGH THE METAL THICKNESS WITH AN ADDITIONAL 3/16" MIN. OF THREADS BEYOND.
14. CONSTRUCTION NOTES: THE VERITICAL FRAME MEMBERS RUN THROUGH WHILE THE HORIZONTAL MEMBERS ARE COPED & BUTTED TO THE VERTICAL FRAME MEMBER. THE VERTICAL MEMBERS ARE FASTENED TO THE HORIZONTAL MEMBERS WITH ANCHORS INTO SCREW SPLINES AS INDICATED IN THIS DRAWING. ALL CONSTRUCTION SHALL BE IN ACCORDANCE WITH KAWNEER INSTALLATION INSTRUCTIONS.

TABLE OF CONTENTS

SHEET	DESCRIPTION
01	GENERAL NOTES
02	SAMPLE ELEVATION, STRAP ANCHORAGE
03	SAMPLE ELEVATION, WITH RECEPTOR/SUBSILL
04-05	SECTION DETAILS
06	APPROVED GLAZING TYPES, DP CHARTS
07	GLAZING DETAILS
08	PERIMETER ANCHOR DETAILS
09	EXTRUSION PROFILES, BOM

Lucas Turner
2026.08.18
16:08:22
-05'00'

REV. #	DATE	
2	8/18/2026	2026 FBC UPDATE
1	8/17/2023	2023 FBC UPDATE
-	10/12/2022	INITIAL RELEASE

PRINTS ISSUED FOR

KAWNEER
555 GUTHRIDGE COURT
NORCROSS, GEORGIA 30092
PH. 770-449-5555
WWW.KAWNEER.COM

LUCAS A. TURNER
LICENSE
No. 58201
STATE OF FLORIDA
PROFESSIONAL ENGINEER

8/18/2026
LUCAS A. TURNER
FL P.E. #58201

TURNER ENGINEERING & CONSULTING, INC.
2428 OLD NATCHEZ TRACE TRL.
CAMDEN, TN 38320
PH. 941-380-1574

DRAWING NO. 8400TL-FPA	PRODUCT 8400TL FIXED
FPA # FL41749	
DATE 10/12/2022	
SCALE NTS	SHEET 01 OF 09

STRAP ANCHORAGE

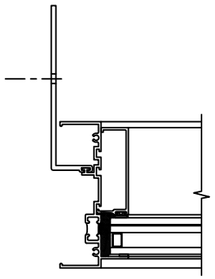

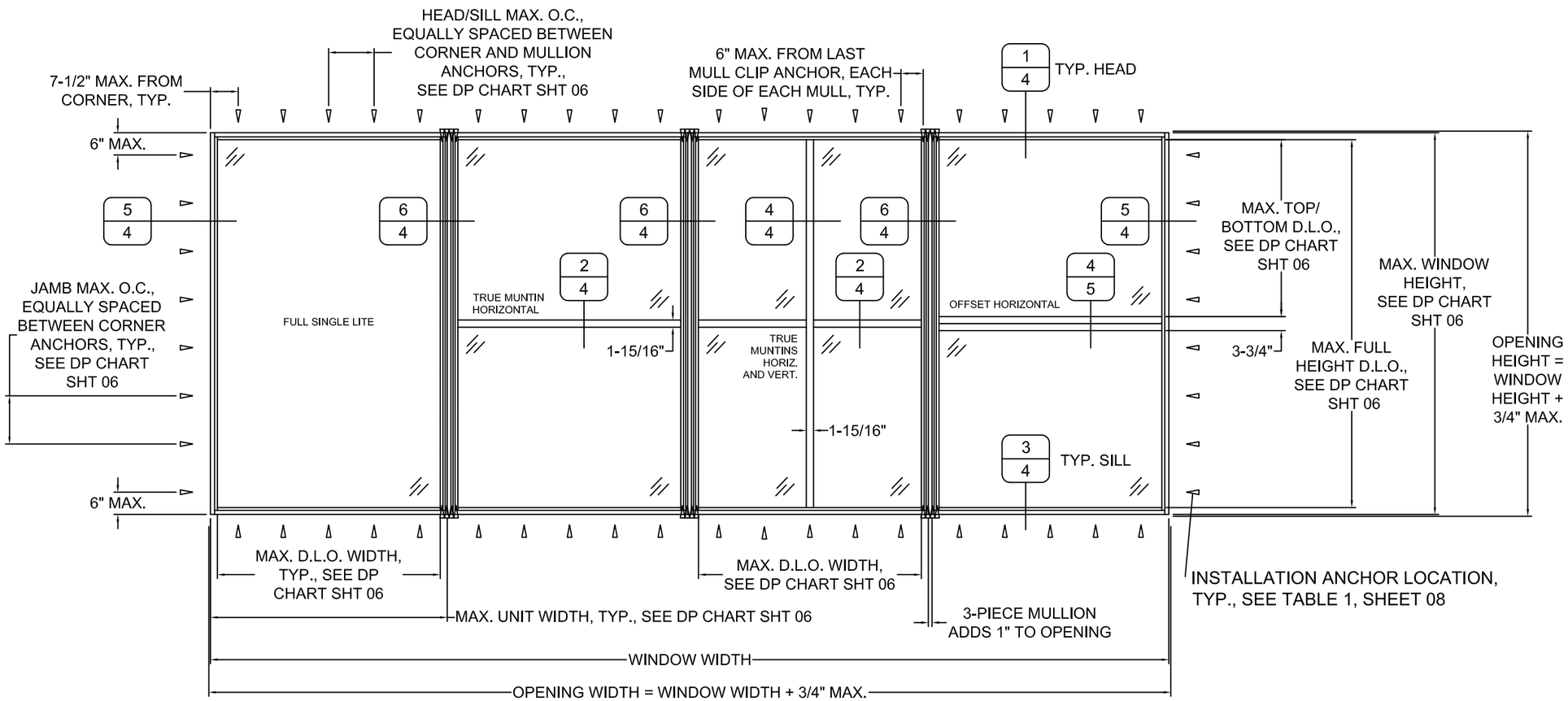

SAMPLE ELEVATION, STRAP ANCHORAGE

REV. #	DATE	
2	8/18/2026	2026 FBC UPDATE
1	8/17/2023	2023 FBC UPDATE
-	10/12/2022	INITIAL RELEASE
		PRINTS ISSUED FOR

KAWNEER
555 GUTHRIDGE COURT
NORCROSS, GEORGIA 30092
PH. 770-449-5555
WWW.KAWNEER.COM

LUCAS A. TURNER
LICENSE
No. 58201
STATE OF FLORIDA
PROFESSIONAL ENGINEER

8/18/2026
LUCAS A. TURNER
FL P.E. #58201

TURNER ENGINEERING & CONSULTING, INC.
2428 OLD NATCHEZ TRACE TRL.
CAMDEN, TN 38320
PH. 941-380-1574

DRAWING NO. 8400TL-FPA	PRODUCT 8400TL FIXED
FPA # FL41749	
DATE 10/12/2022	SHEET 02 OF 09
SCALE NTS	

RECEPTOR/SUBSILL

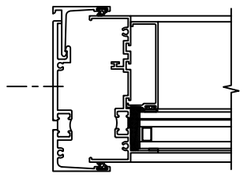

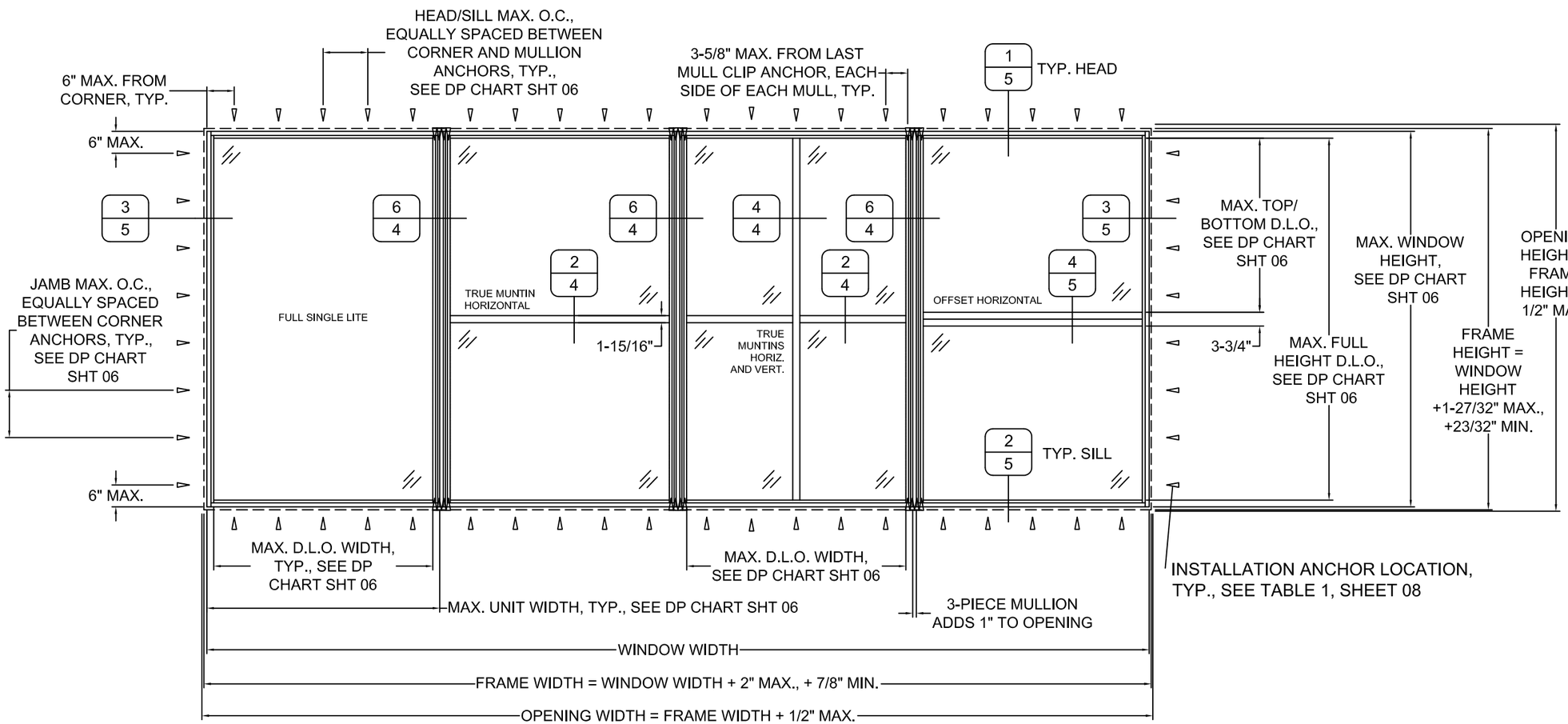

SAMPLE ELEVATION, RECEPTOR/SUBSILL ANCHORAGE

REV. #	DATE	
2	8/18/2026	2026 FBC UPDATE
1	8/17/2023	2023 FBC UPDATE
-	10/12/2022	INITIAL RELEASE

PRINTS ISSUED FOR

KAWNEER
555 GUTHRIDGE COURT
NORCROSS, GEORGIA 30092
PH. 770-449-5555
WWW.KAWNEER.COM

LUCAS A. TURNER
LICENSE
No. 58201
STATE OF FLORIDA
PROFESSIONAL ENGINEER

8/18/2026
LUCAS A. TURNER
FL P.E. #58201

TURNER ENGINEERING & CONSULTING, INC.
2428 OLD NATCHEZ TRACE TRL.
CAMDEN, TN 38320
PH. 941-380-1574

DRAWING NO. 8400TL-FPA	PRODUCT 8400TL FIXED
FPA # FL41749	
DATE 10/12/2022	
SCALE NTS	SHEET 03 OF 09

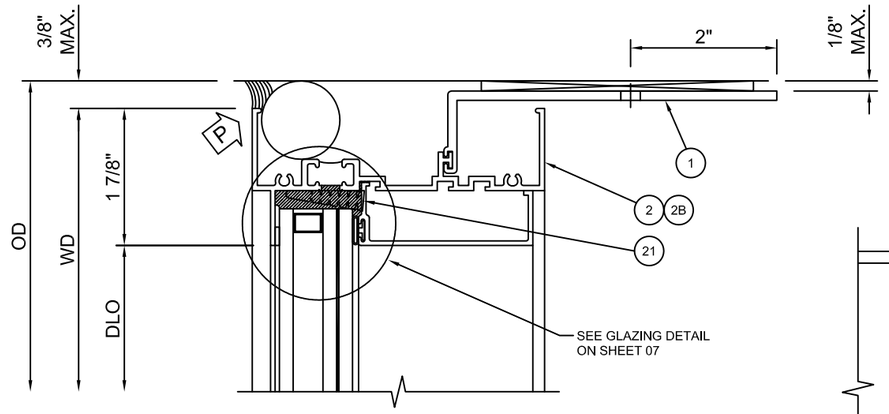

1/4

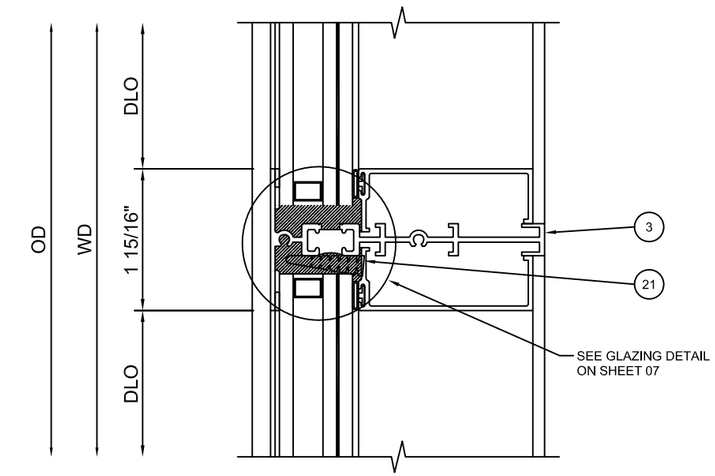

2/4

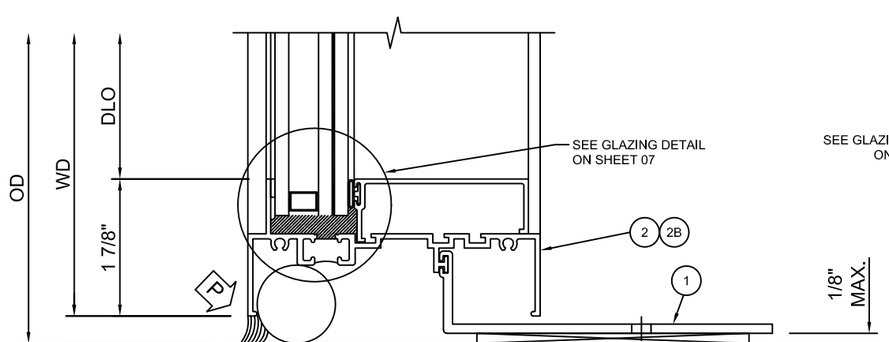

3/4

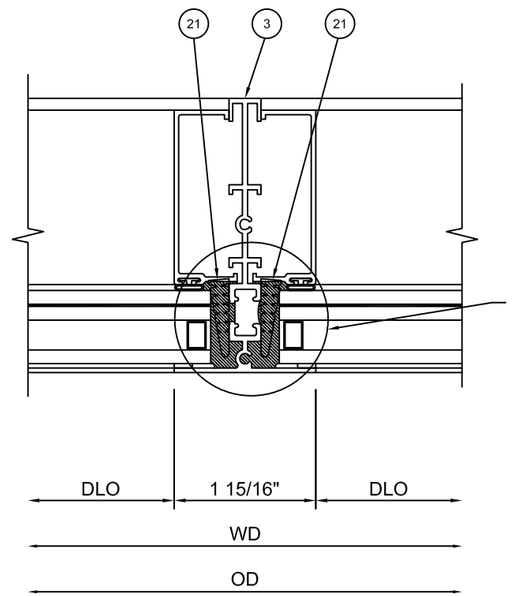

4/4

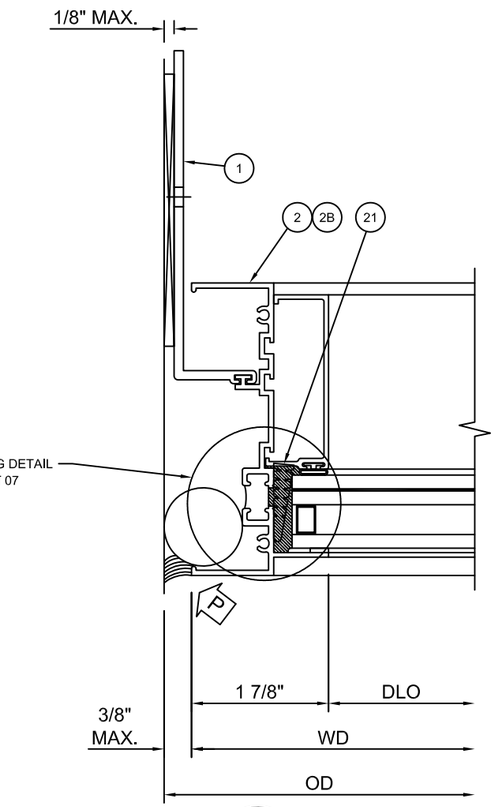

5/4

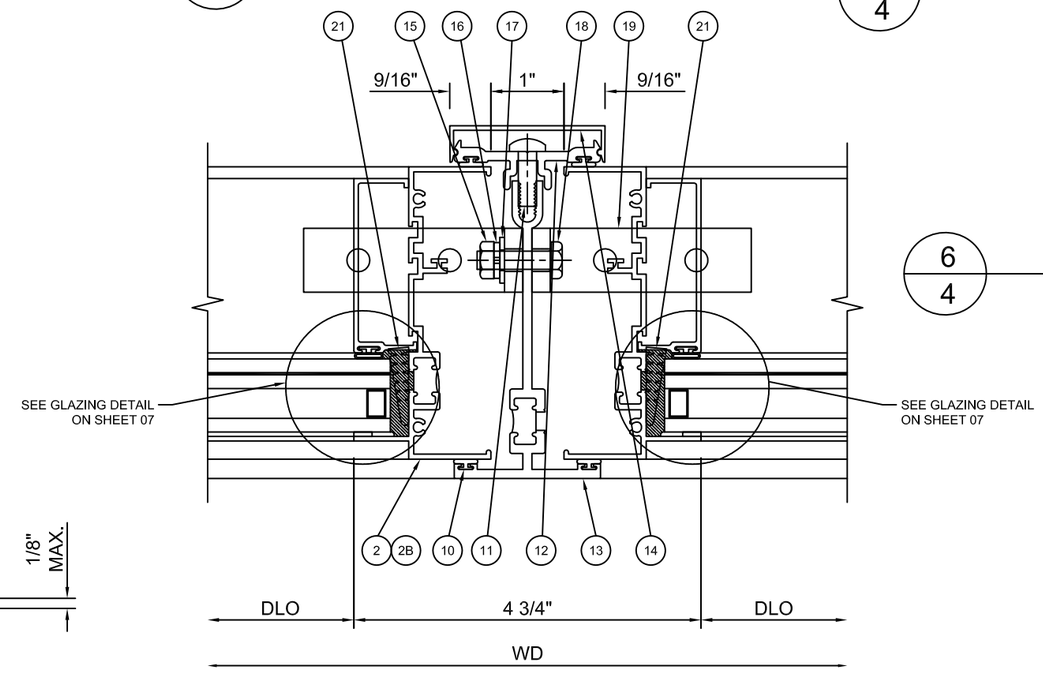

6/4

P PERIMETER SEALS (BY OTHERS)

REV. #	DATE
2	8/18/2026
1	8/17/2023
-	10/12/2022

PRINTS ISSUED FOR: 2026 FBC UPDATE; 2023 FBC UPDATE; INITIAL RELEASE

KAWNEER
555 GUTHRIDGE COURT
NORCROSS, GEORGIA 30092
PH. 770-449-5555
WWW.KAWNEER.COM

LUCAS A. TURNER
LICENSE
No. 58201
STATE OF FLORIDA
PROFESSIONAL ENGINEER

8/18/2026
LUCAS A. TURNER
FL P.E. #58201

TURNER ENGINEERING & CONSULTING, INC.
2428 OLD NATCHEZ TRACE TRL.
CAMDEN, TN 38320
PH. 941-380-1574

DRAWING NO. 8400TL-FPA	PRODUCT 8400TL FIXED
FPA # FL41749	
DATE 10/12/2022	
SCALE NTS	SHEET 04 OF 09

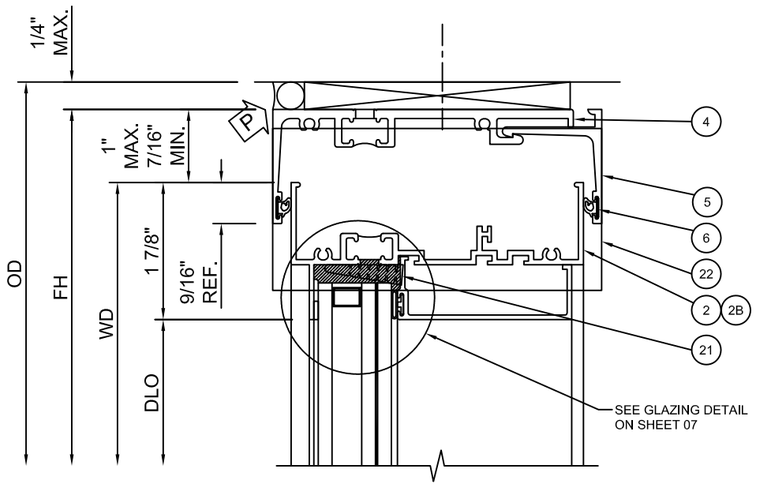

1/5

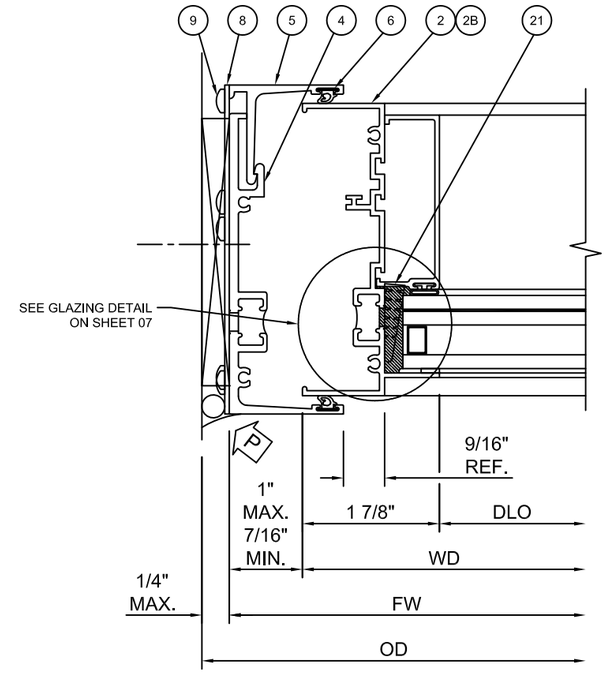

3/5

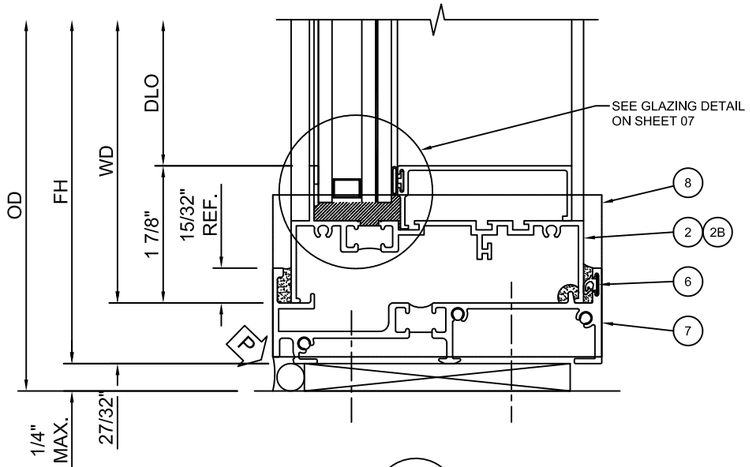

2/5

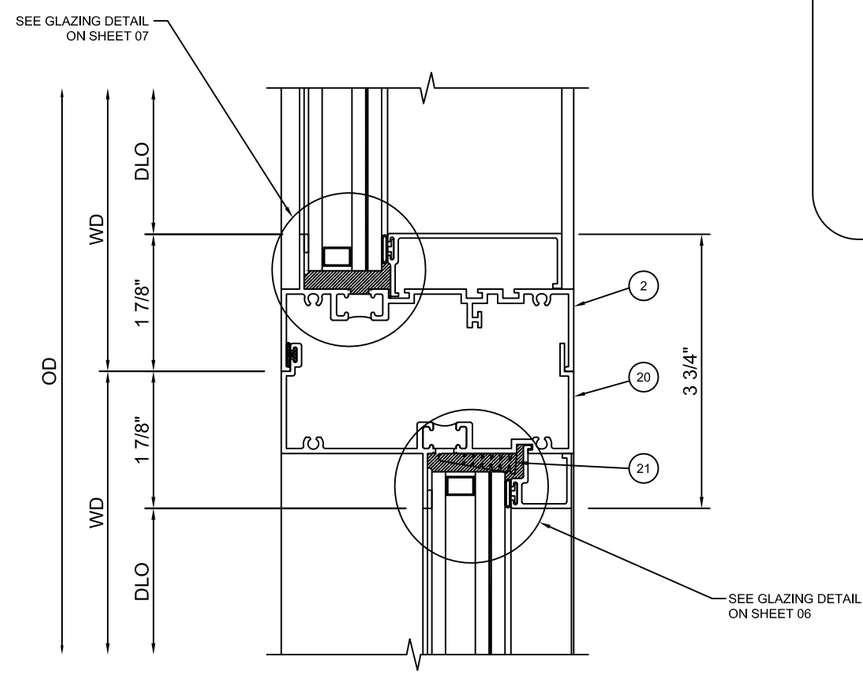

4/5

FRAME PROFILE OPTIONS

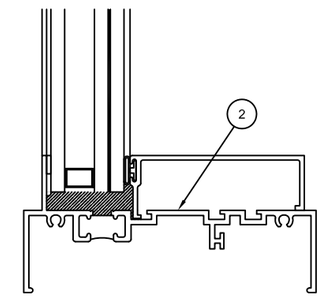

8400TL FIXED STANDARD

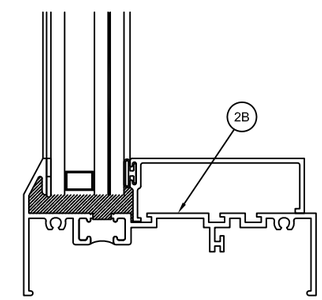

8400TL FIXED BEVEL FACE

P PERIMETER SEALS (BY OTHERS)

REV. #	DATE	
2	8/18/2026	2026 FBC UPDATE
1	8/17/2023	2023 FBC UPDATE
-	10/12/2022	INITIAL RELEASE
		PRINTS ISSUED FOR

KAWNEER
555 GUTHRIDGE COURT
NORCROSS, GEORGIA 30092
PH. 770-449-5555
WWW.KAWNEER.COM

LUCAS A. TURNER
LICENSE
No. 58201
STATE OF FLORIDA
PROFESSIONAL ENGINEER

8/18/2026
LUCAS A. TURNER
FL P.E. #58201

TURNER ENGINEERING & CONSULTING, INC.
2428 OLD NATCHEZ TRACE TRL.
CAMDEN, TN 38320
PH. 941-380-1574

DRAWING NO.	PRODUCT
8400TL-FPA	8400TL FIXED
FPA # FL41749	
DATE 10/12/2022	
SCALE NTS	SHEET 05 OF 09

APPROVED GLAZING TYPES

MISSILE RATING	TYPE	NOMINAL THICKNESS	DESCRIPTION
LARGE AND SMALL MISSILE	1A	1-1/16"	1/4" FT OUTBOARD, 3/8" SPACER, LAMINATED INBOARD: 3/16" HS + 0.075" EASTMAN SAFLEX CP + 3/16" HS
	1B	1-1/8"	1/4" FT OUTBOARD, 7/16" SPACER, LAMINATED INBOARD: 3/16" HS + 0.075" EASTMAN SAFLEX CP + 3/16" HS
	2A	1-1/16"	1/4" FT OUTBOARD, 3/8" SPACER, LAMINATED INBOARD: 3/16" HS + 0.090" KURARAY SENTRYGLAS + 3/16" HS
	2B	1-1/8"	1/4" FT OUTBOARD, 7/16" SPACER, LAMINATED INBOARD: 3/16" HS + 0.090" KURARAY SENTRYGLAS + 3/16" HS
	3A	1-1/16"	1/4" FT OUTBOARD, 3/8" SPACER, LAMINATED INBOARD: 3/16" HS + 0.100" EASTMAN SAFLEX HP + 3/16" HS
	3B	1-1/8"	1/4" FT OUTBOARD, 7/16" SPACER, LAMINATED INBOARD: 3/16" HS + 0.100" EASTMAN SAFLEX HP + 3/16" HS

MISSILE RATING	TYPE	NOMINAL	DESCRIPTION
SMALL MISSILE ONLY	4A	1-1/16"	1/4" FT OUTBOARD, 3/8" SPACER, LAMINATED INBOARD: 3/16" HS + 0.060" EASTMAN SAFLEX PVB + 3/16" HS
	4B	1-1/8"	1/4" FT OUTBOARD, 7/16" SPACER, LAMINATED INBOARD: 3/16" HS + 0.060" EASTMAN SAFLEX PVB + 3/16" HS
	5A	1-1/16"	1/4" FT OUTBOARD, 3/8" SPACER, LAMINATED INBOARD: 3/16" HS + 0.060" KURARAY BUTACITE PVB + 3/16" HS
	5B	1-1/8"	1/4" FT OUTBOARD, 7/16" SPACER, LAMINATED INBOARD: 3/16" HS + 0.060" KURARAY BUTACITE PVB + 3/16" HS

DP CHART (ALLOWABLE DESIGN PRESSURES), STRAP ANCHORAGE

	APPROVED GLAZING TYPE	DIMENSIONS						DESIGN PRESSURE	HEAD/SILL MAX. O.C. ANCHOR SPACING	JAMB MAX. O.C. ANCHOR SPACING
		MAX. UNIT WIDTH (in.)	MAX. D.L.O. WIDTH (in.)	MAX. WINDOW HEIGHT (in.)	MAX. FULL HEIGHT D.L.O. (in.)	MAX. TOP/BOT. D.L.O. WITH TRUE MUNTIN HORIZ. (in.)	MAX. TOP/BOT. D.L.O. WITH OFFSET HORIZ. (in.)	(+/- psf)	(in.)	(in.)
STANDARD OR BEVELED FRAME, FULL SINGLE LITE	1A, 2A, 3A, 4A, OR 5A	35 3/16	31 7/16	53 3/8	49 5/8	-	-	90.0	10 1/4	13 13/16
	1B, 2B, 3B, 4B, OR 5B	50 3/4	47	82 3/4	79	-	-	47.0	12	11 13/16
STANDARD OR BEVELED FRAME WITH HORIZONTALS (TRUE MUNTIN OR OFFSET)	1A, 2A, 3A, 4A, OR 5A	35 3/16	31 7/16	53 3/8	-	23 27/32	22 15/16	90.0	10 1/4	13 13/16
	1B, 2B, 3B, 4B, OR 5B	63 3/4	60	102 3/4	-	48 17/32	47 5/8	47.0	12 1/4	13

DP CHART (ALLOWABLE DESIGN PRESSURES), WITH RECEPTOR/SUBSILL

	APPROVED GLAZING TYPE	DIMENSIONS						DESIGN PRESSURE	HEAD/SILL MAX. O.C. ANCHOR SPACING	JAMB MAX. O.C. ANCHOR SPACING
		MAX. UNIT WIDTH (in.)	MAX. D.L.O. WIDTH (in.)	MAX. WINDOW HEIGHT (in.)	MAX. FULL HEIGHT D.L.O. (in.)	MAX. TOP/BOT. D.L.O. WITH TRUE MUNTIN HORIZ. (in.)	MAX. TOP/BOT. D.L.O. WITH OFFSET HORIZ. (in.)	(+/- psf)	(in.)	(in.)
STANDARD OR BEVELED FRAME, FULL SINGLE LITE OR WITH HORIZONTALS (TRUE MUNTIN OR OFFSET)	1A, 2A, 3A, 4A, OR 5A	35 3/16	31 7/16	53 3/8	49 5/8	-	-	90.0	10 1/4	13 13/16
	1B, 2B, 3B, 4B, OR 5B	50 3/4	47	82 3/4	79	-	-	47.0	12	11 13/16

REV. #	DATE
2	8/18/2026
1	8/17/2023
-	10/12/2022

PRINTS ISSUED FOR: INITIAL RELEASE; 2023 FBC UPDATE; 2026 FBC UPDATE

KAWNEER
555 GUTHRIDGE COURT
NORCROSS, GEORGIA 30092
PH. 770-449-5555
WWW.KAWNEER.COM

LUCAS A. TURNER
LICENSE
No. 58201
STATE OF FLORIDA
PROFESSIONAL ENGINEER

8/18/2026
LUCAS A. TURNER
FL P.E. #58201

TURNER ENGINEERING & CONSULTING, INC.
2428 OLD NATCHEZ TRACE TRL.
CAMDEN, TN 38320
PH. 941-380-1574

DRAWING NO. 8400TL-FPA	PRODUCT 8400TL FIXED
FPA # FL41749	
DATE 10/12/2022	
SCALE NTS	SHEET 06 OF 09

8400TL FIXED

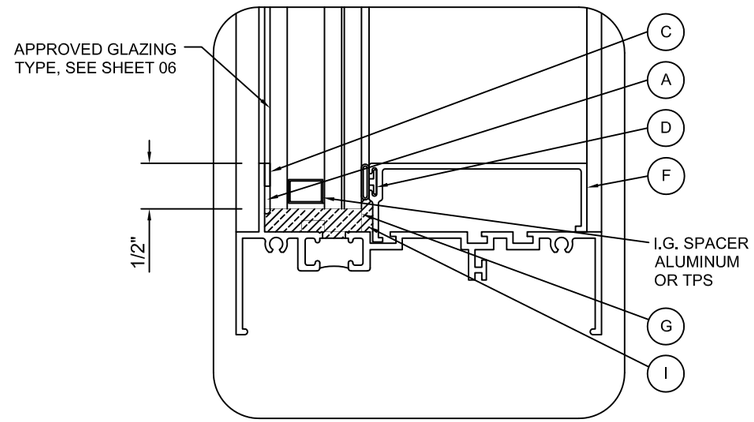

GLAZING NOTES:

1) INFILL SIZE FORMULA DLO + 1" UNLESS OTHERWISE NOTED.
2) SETTING BLOCKS FBC 2411.3.3.1 COMPLIANT

8400TL FIXED OFFSET HORIZ.

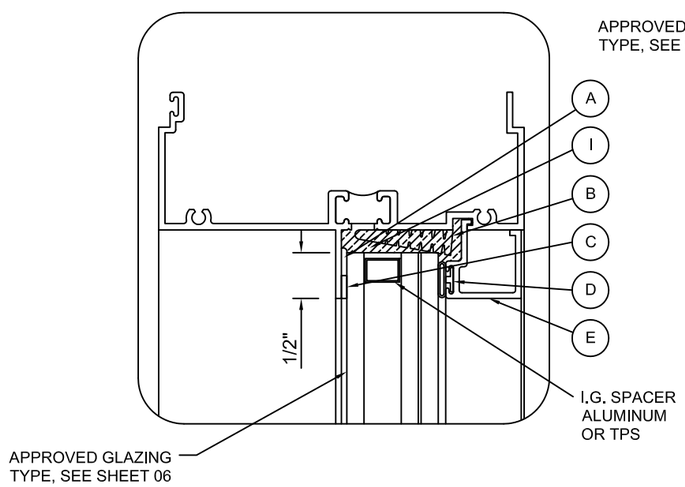

8400TL FIXED BEVEL FACE

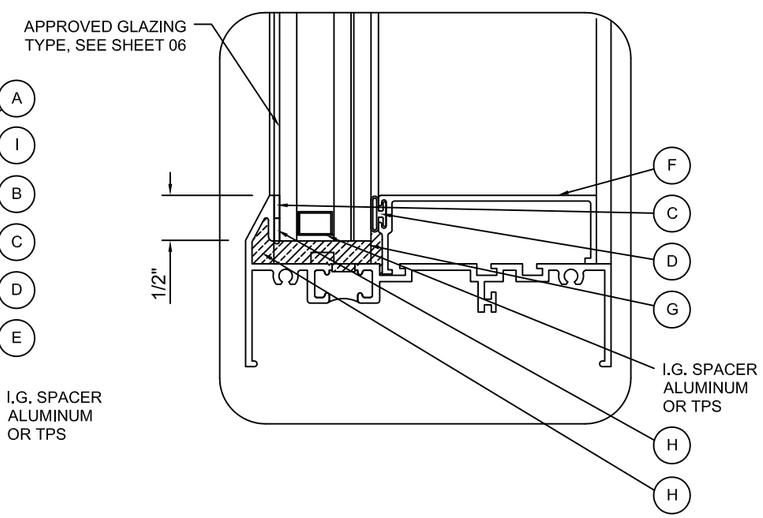

8400TL FIXED GLAZING PARTS LIST

NO.	PART NO.	DESCRIPTION	DIMENSIONS (IN.)	MATERIAL
GLAZING PARTS				
A	-	BACKBEDDING	N/A	TREMCO PROGLAZE SSG
B	127099	GLAZING SIDE / TOP WEDGE BLOCK	1.063 x 0.344	EPDM
C	127186	GLAZING TAPE	0.250 x 0.125	CLOSED CELL FOAM
D	127077	BULB GASKET-SHORE "A" 65±5 DUROMETER	0.300	POLYPROPYLENE
E	345099	FIXED BOTTOM LITE GLASS STOP	0.696 x 0.750 x 0.062	6063 T6 ALUMINUM
F	345095	GLASS STOP	2.384 x 0.750 x 0.062	6063 T6 ALUMINUM
G	027339	SETTING BLOCK-SHORE "A" 85±5 DUROMETER	1.062 x 0.250	SILICONE/EPDM
H	-	BACKBEDDING/SEALANT	N/A	SIKASIL SG-20
I	-	BACKBEDDING/SEALANT	N/A	DOW 995

REV. #	DATE	PRINTS ISSUED FOR
2	8/18/2026	2026 FBC UPDATE
1	8/17/2023	2023 FBC UPDATE
-	10/12/2022	INITIAL RELEASE

KAWNEER
555 GUTHRIDGE COURT
NORCROSS, GEORGIA 30092
PH. 770-449-5555
WWW.KAWNEER.COM

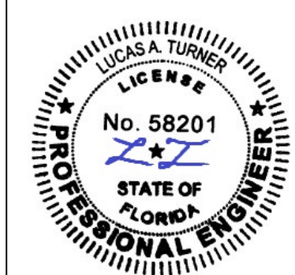

8/18/2026
LUCAS A. TURNER
FL P.E. #58201

TURNER ENGINEERING &
CONSULTING, INC.
2428 OLD NATCHEZ TRACE TRL.
CAMDEN, TN 38320
PH. 941-380-1574

DRAWING NO. 8400TL-FPA	PRODUCT 8400TL FIXED
FPA # FL41749	
DATE 10/12/2022	SHEET 07 OF 09
SCALE NTS	

TABLE 1. QUALIFIED ANCHOR INFORMATION

ID	SUBSTRATE	ANCHOR	MIN. EMBEDMENT	MIN. EDGE DISTANCE
A	SOLID UNCRACKED CONCRETE (3050 PSI MIN.)	1/4" DEWALT COATED CARBON STEEL ULTRACON+	1 3/4"	2 1/2"
B	UNCRACKED CMU (ASTM C-90) (JAMBS ONLY)	1/4" DEWALT COATED CARBON STEEL ULTRACON+	1 1/4"	2 1/2"
C	2x MIN. SOUTHERN PINE WOOD (G=0.55 MIN)	#12 GRADE 5 WOOD SCREW	2"	1"
D	16 GAUGE (0.060") MIN. STEEL STUD (33 KSI YIELD MIN.) OR 1/8" MIN. ALUMINUM (6063-T5 MIN.) OR 1/8" MIN. A36 STEEL	#1/4-14 ITW TEKS SELF-DRILLING SCREW	FULL + 3 THREADS	1/2"

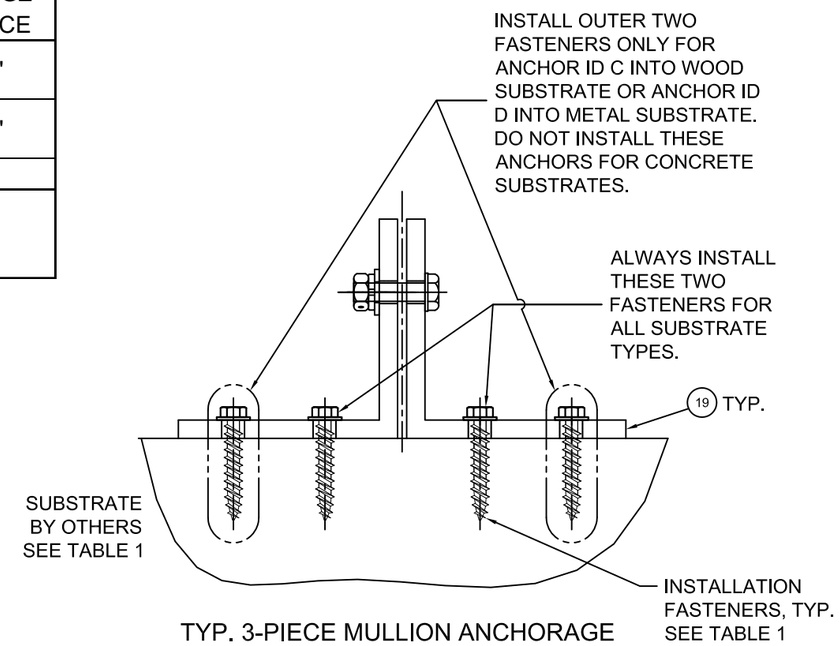

TYP. 3-PIECE MULLION ANCHORAGE HEAD/SILL

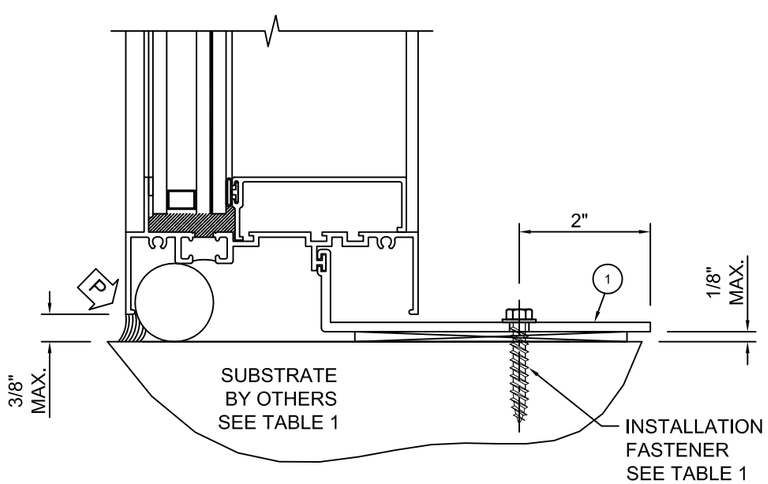

TYP. STRAP ANCHORAGE HEAD/SILL/JAMB

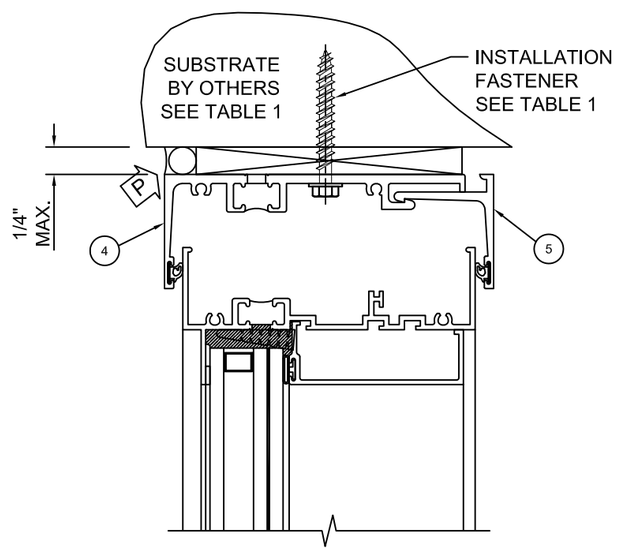

TYP. RECEPTOR ANCHORAGE HEAD/JAMB

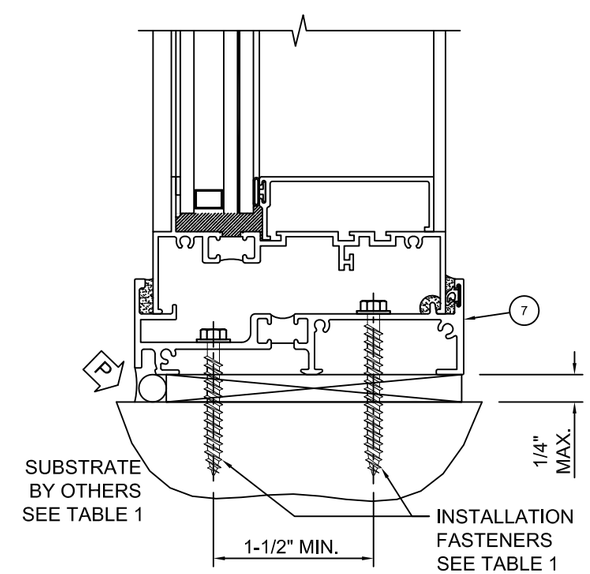

TYP. SUBSILL ANCHORAGE

(TWO ANCHORS PER LOCATION)

P PERIMETER SEALS (BY OTHERS)

REV. #	DATE
2	8/18/2026
1	8/17/2023
-	10/12/2022

2026 FBC UPDATE
2023 FBC UPDATE
INITIAL RELEASE
PRINTS ISSUED FOR

KAWNEER
555 GUTHRIDGE COURT
NORCROSS, GEORGIA 30092
PH. 770-449-5555
WWW.KAWNEER.COM

LUCAS A. TURNER
LICENSE
No. 58201
STATE OF FLORIDA
PROFESSIONAL ENGINEER

8/18/2026
LUCAS A. TURNER
FL P.E. #58201

TURNER ENGINEERING & CONSULTING, INC.
2428 OLD NATCHEZ TRACE TRL.
CAMDEN, TN 38320
PH. 941-380-1574

DRAWING NO. 8400TL-FPA	PRODUCT 8400TL FIXED
FPA # FL41749	
DATE 10/12/2022	
SCALE NTS	SHEET 08 OF 09

8400TL FIXED MATERIAL PARTS LIST

NO.	PART NO.	DESCRIPTION	DIMENSIONS (IN.)	MATERIAL
EXTRUSIONS & MISC. PARTS				
1	245458	STRAP ANCHOR - 3" CUT LENGTH	1.125 x 4.500 x 0.125	6063 T6 ALUMINUM
2	245310	8400TL FRAME	1.875 x 4.000 x 0.070	6063 T6 ALUMINUM
2B	S-11609	8400TL FRAME WITH BEVEL FACE	1.875 x 4.000 x 0.070	6063 T6 ALUMINUM
3	245314	FIXED LITE TRUE MUNTIN	1.938 x 3.750 x 0.070	6063 T6 ALUMINUM
4	345368	TWO PIECE RECEPTOR	1.562 x 4.111 x 0.125	6063 T6 ALUMINUM
5	345169	TWO PIECE RECEPTOR CLOSER	1.562 x 1.360 x 0.125	6063 T6 ALUMINUM
6	027915	WEATHERING	4.125 x 1.063 x 0.250	SANTOPRENE/POLYPROPYLENE
7	245201	SUB SILL	1.307 x 4.500 x 0.094	6063 T6 ALUMINUM
8	245440	SUB SILL END DAM	4.500 x 2.216 x 0.062	5005-34 ALUMINUM
9	128501	#8 x 1-1/4" PHTFS "B" FASTENER		300 SERIES STAINLESS STEEL
10	027874	WEATHERING	0.135 x 0.200	N/A
11	128197	1/4-20 x 3/4" TYPE I CRPHMS FASTENER		300 SERIES STAINLESS STEEL
12	243087	WINDOW 3 PIECE MULLION PRESSURE PLATE	0.521 x 2.002 x 0.125	6063 T6 ALUMINUM
13	245287	3 PIECE FLAT MULLION	2.000 x 4.071 x 0.125	6063 T6 ALUMINUM
14	243088	STANDARD MULLION PRESSURE BAR COVER	2.125 x 0.500 x 0.200	6063 T6 ALUMINUM
15	128248	1/4" x 20 HEX JAM NUT		300 SERIES STAINLESS STEEL
16	028279	1/4" HELICAL SPRING LOCK WASHER		CARBON STEEL
17	028716	1/4" FLAT WASHER TYPE A		300 SERIES STAINLESS STEEL
18	028263	1/4-20 x 1" HCS B		STAINLESS STEEL, FERRITIC, AISI 430
19	245428	MULLION ANCHOR	3.00 x 3.00 x 0.250	6063 T6 ALUMINUM
20	245344	OFFSET HORIZONTAL BOTTOM	1.50 x 4.00 x 0.070	6063 T6 ALUMINUM
21	127099	GLAZING SIDE / TOP WEDGE BLOCK	1.063 x 0.344	BLACK EPDM

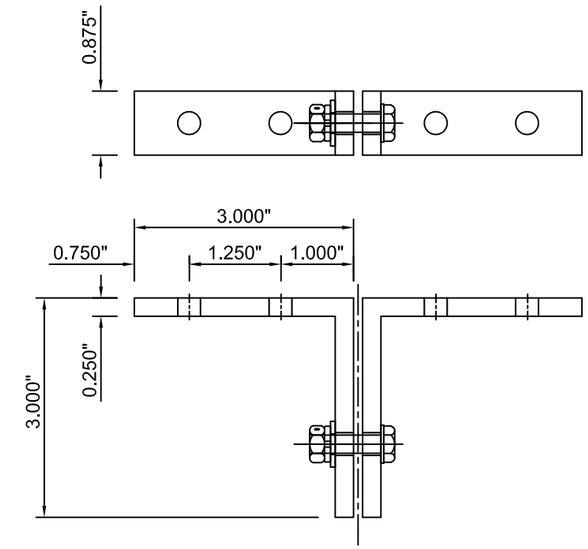

19 245428

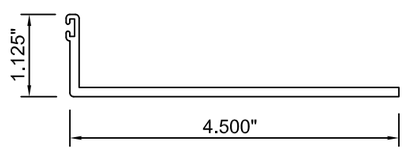

1 245458

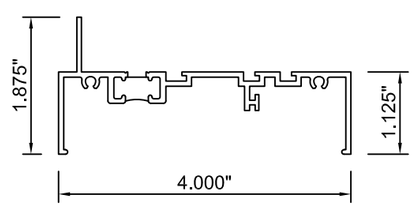

2 245310

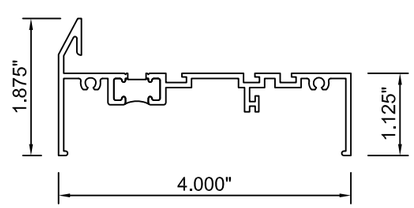

2B B-11609

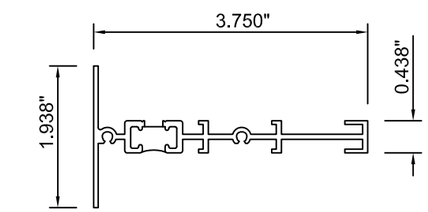

3 245314

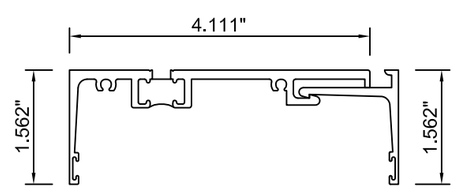

4 345368 5 345169

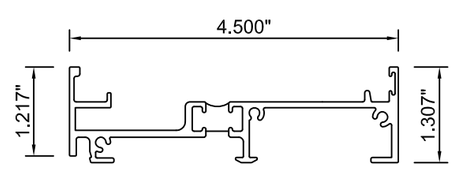

7 245201

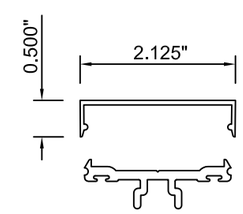

14 243088

12 243087

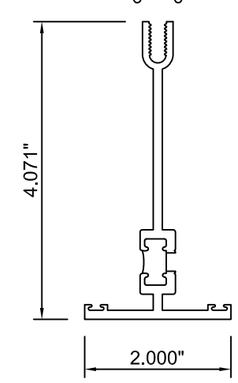

13 245287

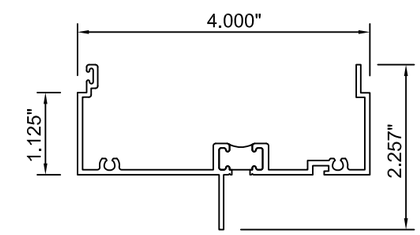

20 245344

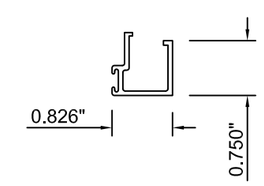

E 345099

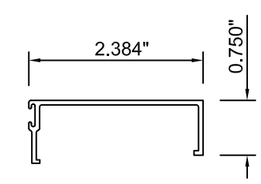

F 345095

REV. #	DATE	
2	8/18/2026	2026 FBC UPDATE
1	8/17/2023	2023 FBC UPDATE
-	10/12/2022	INITIAL RELEASE
		PRINTS ISSUED FOR

KAWNEER
555 GUTHRIDGE COURT
NORCROSS, GEORGIA 30092
PH. 770-449-5555
WWW.KAWNEER.COM

8/18/2026
LUCAS A. TURNER
FL P.E. #58201

TURNER ENGINEERING & CONSULTING, INC.
2428 OLD NATCHEZ TRACE TRL.
CAMDEN, TN 38320
PH. 941-380-1574

DRAWING NO. 8400TL-FPA	PRODUCT 8400TL FIXED
FPA # FL41749	
DATE 10/12/2022	SHEET 09 OF 09
SCALE NTS	