# INSTALLATION GUIDELINES

**Eldorado Stone** endorses and supports the Masonry Veneer Manufacturers Association (MVMA) Installation Guidelines. The mission of the MVMA organization is "To advance the growth of the manufactured masonry veneer products industry through proactive technical, advocacy, and awareness efforts."

One of the most important projects completed by the MVMA Technical Committee was the development of a highly detailed and carefully researched installation guide. The latest version of that guide can be downloaded at **www.eldoradostone.com/resources**. These guidelines are intended to share over 45 years of knowledge, experience and understanding regarding the proper installation of manufactured stone veneer products. For any specific or unique installation questions or challenges, including:

- Traditional masonry installation methods
- Installation over cement board using polymer modified mortar
- Installation over thick foam; fastener selection
- Installation of large format profiles

Please contact Eldorado Stone's Technical Support Service directly at 800.925.1491.

**Note:** It is important to recognize that Eldorado Stone and Brick veneer products are an adhered veneer or façade which are attached directly to a cementitious substrate for purposes of providing ornamentation and a first layer of weatherization protection. Adhered Concrete Masonry Veneers are not intended as a structural product or a waterproofing element. Most importantly, the real subject matter expert is your local building department and the local building code. Your local building code will supersede all other written or verbal installation guides provided by Eldorado Stone or the MVMA. Go to ncma.org/manufactured-stone-veneer for more information about the MVMA.

ELDORADO STONE®

eldoradostone.com 800.925.1491

# Installation Guide and Detailing Options for Compliance with ASTM C1780

**For Adhered Manufactured Stone Veneer 5th Edition, 2nd Printing**

MASONRY VENEER MANUFACTURERS ASSOCIATION

MVMA

affiliate of the National Concrete Masonry Association

# Table of Contents

Definitions/Abbreviations ..... 4
References ..... 4
Workmanship ..... 7
Material Requirements ..... 7
Surface Preparation ..... 9
Installation of Adhered Manufactured Stone Veneer ..... 12
Cautions ..... 14

## Drawings/Cross Sections

Figure 1. Installation Over Wood Framing ..... 15
Figure 2. Installation Over Concrete Masonry Units ..... 16
Figure 3. Wall Assembly Transition ..... 17
Figure 4a. Typical Frame Wall Section ..... 18
Figure 4b. Typical Frame Wall Section Over Continuous Rigid Insulation ..... 19
Figure 5a. Foundation Wall Base ..... 20
Figure 5b. Foundation Wall Base Over Continuous Rigid Insulation ..... 21
Figure 6. Foundation Wall Base-AMSV Overlapping Foundation ..... 22
Figure 7. Foundation Wall-Transition to AMSV Continuing Down Foundation ..... 23
Figure 8a. Cladding Transition ..... 24
Figure 8b. Cladding Transition Over Continuous Rigid Insulation ..... 25
Figure 9a. Outside Corner ..... 26
Figure 9b. Outside Corner Over Continuous Insulation ..... 27
Figure 10a. Inside Corner ..... 28
Figure 10b. Inside Corner Over Continuous Insulation ..... 29
Figure 11a. Horizontal Transition ..... 30
Figure 11b. Horizontal Transition Over Continuous Insulation ..... 31
Figure 12a. Vertical Transition ..... 32
Figure 12b. Vertical Transition Over Continuous Insulation ..... 33
Figure 13a. Open Eave-Overhang ..... 34
Figure 13b. Open Eave-Overhang Over Continuous Insulation ..... 35
Figure 14. Open Eave-Flush ..... 36
Figure 15. Rake-Overhang ..... 37
Figure 16. Rake-Flush ..... 38
Figure 17a. Side Wall-Composition Shingles ..... 39
Figure 17b. Side Wall-Composition Shingles Over Continuous Insulation ..... 40
Figure 18. Side Wall-Composition Shingles Curbing ..... 41
Figure 19. Side Wall-Tile Roofing ..... 42
Figure 20. Side Wall-Tile Roofing Curbing ..... 43
Figure 21a. Window Sill ..... 44

# Table of Contents (continued)

## Drawings/Cross Sections (continued)

Figure 21b. Window Sill Over Continuous Insulation ....45
Figure 22. Window Jamb ....46
Figure 23. Window Head....47
Figure 24. Kick-Out Flashing....48
Figure 25. Cricket ....49
Figure 26. Chimney Chase ....50
Figure 27. Column Base ....51
Figure 28. Penetration, Flanged ....52
Figure 29. Penetration Non-Flanged, with Building Paper WRB ....53
Figure 30. Penetration Non-Flanged, with Housewrap WRB ....54
Figure 31. Penetration, Fixture ....55
Figure 32. Penetration, Dryer Vent ....56
Figure 33. Deck Termination ....57
Figure 34. Wall Cap ....58
Figure 35. Wall Assembly-Rainscreen System-Drainage System ....59
Figure 36. Wall Assembly-Rainscreen System-Strapped ....60
Figure 37. Foundation Wall Base-Rainscreen System ....61
Figure 38. Typical Wall Section-Rainscreen System ....62
Figure 39. Retaining Wall (CMU) ....63
Figure 40. Stone Wrap Under Straight Overhang ....64
Figure 41a. Forward Mounted Commercial Window ....65
Figure 41b. Forward Mounted Commercial Window Over Continuous Insulation ....66
Figure 42. Forward Mounted Commercial Window-Top View ....67
Figure 43. Commercial Storefront Window-Top View ....68
Figure 44. Commercial Storefront Window ....69
Figure 45. Wall-Section Multi-Floor Joint Detail ....70
Figure 46a. Wall-Section CMU....71
Figure 46b. Wall-Section Over Continuous Rigid Insulation....72
Figure 47. Wall-Section Parapet with Stone Cap....73
Figure 48. Wall-Section Parapet with Steel Cap ....74
**Notes** ....75

Masonry Veneer Manufacturers Association
National Concrete Masonry Association
13750 Sunrise Valley Drive
Herndon, VA 20171
Phone: (703) 713-1900
www.masonryveneer.org
www.ncma.org

## Disclaimer

This Guide addresses generally accepted methods and details for the installation of Adhered Manufactured Stone Veneer. To the best of our knowledge, it is correct and up to date. The document, however, is designed only as a guide and it is not intended for any specific construction project. The MVMA and NCMA make no express or implied warranty or guarantee of the techniques, construction methods or materials identified herein.

It is understood that there are alternative means or methods that might be required and/or recommended based on project conditions, manufacturer's recommendations, or product characteristics.

This Guide is for builders, architects, designers, masons, installers and other construction professionals who can interpret the illustrations and typical applications of Adhered Manufactured Stone Veneer presented. Details in this guide that address the installation and detailing of Adhered Manufactured Stone Veneer and its interface with other building components are not intended as specific recommendations. It is the responsibility of all design and construction professionals to determine the applicability and appropriate application of any detail to any specific project.

## About

Masonry Veneer Manufacturers Association (MVMA), an affiliate of NCMA, represents the adhered manufactured stone veneer industry's manufacturing companies and their suppliers. The mission of the organization is to advance the growth of the manufactured masonry veneer products industry through proactive technical, advocacy, and awareness efforts.

Copyright © 2018 by the National Concrete Masonry Association. All rights reserved. 5th Edition, 2nd Printing

# Definitions

**Adhered Manufactured Stone Veneer (AMSV)** – lightweight, architectural, non-load-bearing product that is manufactured by wet cast blending of cementitious materials and aggregates, with or without pigments, admixtures, or other materials to simulate the appearance of natural stone and other masonry materials.

*Note: The MVMA recognizes there are many names used to describe Adhered Manufactured Stone Veneer products. Adhered Manufactured Stone Veneer is used commonly throughout the industry and by some manufacturers. In the International Building Code, Adhered Manufactured Stone Veneer products are referred to as Adhered Masonry Veneer. This guide will use AMSV (Adhered Manufactured Stone Veneer) when referencing the product.*

**Backup –** The interior or exterior assembly to which AMSV systems are installed.

**CMU –** Concrete masonry unit.

**Corrosion Resistant –** A material that is intrinsically resistant to degradation or physically or chemically treated to be so under expected exposure conditions. Examples include: plastic-based materials stabilized for exposure to UV light, galvanized ferrous metals, and stainless steel.

**Fasteners —** Corrosion resistant hardware used to secure lath, screed, and flashing materials to backup systems.

**Flashing —** Corrosion resistant material used to restrict the movement of water around any intersection or projection of materials in an assembly.

**Lath —** Corrosion resistant mesh building material fastened to the substrate to act as base for adhering mortar.

**Mortar —** A mixture of cementitious material, water, and aggregate, with or without the addition of admixtures or additives to alter one or more plastic or hardened properties, used to bond masonry construction materials together and fill spaces between.

**Pointing Mortar —** Also known as grouting mortar, mortar mixture used to fill joints and cavities in AMSV construction.

**Mortar Scratch Coat —** Base coat of mortar used during the installation of AMSV; cross-raked to improve bond of subsequent mortar layers.

**Mortar Screen —** Sheet material installed to prevent the mortar scratch coat from filling the drainage space behind an AMSV assembly containing a rainscreen system.

**Mortar Setting Bed —** Mortar used to adhere the AMSV to the substrate or scratch coat.

**Water Resistive Barrier (WRB) —** Material used to restrict the transmission of water to the surface behind.

# References

AC191 – ICC-ES Acceptance Criteria for Metal Plaster Bases (Lath)

AC275 – ICC-ES Acceptance Criteria for Glass Fiber Lath used in Cementitious Exterior Wall Coating or Exterior Cement Plaster (Stucco)

AC376 – ICC-ES Acceptance Criteria for Reinforced Cementitious Sheets used as Wall and Ceiling Sheathing and Floor Underlayment (Cement Board)

ANSI Accredited Evaluation Service – (or equivalent) third-party organization that issues an evaluation report affirming a specific building product meets building code requirements.

International Code Council - Evaluation Service (ICC-ES) – An organization that performs technical evaluations on building products, components, and construction methods for building code compliance. In the case where the building code is silent or ambiguous as to a product's requirements or a specific construction method, ICC-ES may develop "Acceptance Criteria" (AC) for the product or construction method. www.icc-es.org

International Building Code – Building code that provides the minimum requirements for safety, health, and welfare of life and property from hazards of the built environment. The provisions of this code apply to the construction, alteration, addition, replacement, repair, use and occupancy of all buildings except one and two family dwellings, and single-family townhomes not more than three stories in height. www.iccsafe.org

International Residential Code – Building code that provides minimum requirements for safety, health, and welfare of life and property from hazards of the built environment. The provisions of this code apply to the construction, alteration, addition, replacement, repair, use and occupancy of detached one and two family dwellings and single-family townhomes not more than three stories in height. www.iccsafe.org

ANSI – American National Standards Institute, www.ansi.org

ANSI A118.1 – American National Standards Institute Specifications for Dry-Set Portland Cement Mortar

ANSI A118.4 – American National Standards Institute Specifications for Modifed Dry-Set Cement Mortars

ANSI A118.15 – American National Standards Institute Specifications for Improved Modified Dry-Set Cement Mortar

TMS 402 – Building Code Requirements for Masonry Structures. This standard is produced through the efforts of The Masonry Society (TMS). www.masonrysociety.org

TMS 602 – Specification for Masonry Structures. This standard is produced through the efforts of The Masonry Society (TMS). www.masonrysociety.org

ICRI – International Concrete Repair Institute, Technical Guideline No. 310.2. www.icri.org

ASTM International – ASTM is a developer of technical standards for products, systems, and services. www.astm.org

# References (continued)

ASTM C270 – Standard Specification for Mortar for Unit Masonry

ASTM C482 – Standard Test Method for Bond Strength of Ceramic Tile to Portland CementPasteStandard Specification for Metal Lath

ASTM C578 - Standard Specification for Rigid, Cellular Polystyrene Thermal Insulation

ASTM C847 – Standard Specification for Surface Applied Bonding Compounds for Exterior Plastering

ASTM C933 – Standard Specification for Welded Wire Lath

ASTM C979/979M – Standard Specification for Pigments for Integrally Colored Concrete

ASTM C1032 – Standard Specification for Woven Wire Plaster Base

ASTM C1059/1059M – Standard Specification for Latex Agents for Bonding Fresh to Hardened Concrete

ASTM C1063 – Standard Specification for Installation of Lathing and Furring to Receive Interior and Exterior Portland Cement Based Plaster

ASTM C1289 - Standard Specification for Faced Rigid Cellular Polyisocyanurate Thermal Insulation Board

ASTM C1325 – Standard Specification for Non-Asbestos Fiber-Mat Reinforced Cementitious Backer Units

ASTM C1384 – Standard Specification for Admixtures for Masonry Mortars

ASTM C1670/C1670M – Standard Specification for Adhered Manufactured Stone Masonry Veneer Units

ASTM C1714/C1714M – Standard Specification for Preblended Dry Mortar Mix for Unit Masonry

ASTM C1780 – Standard Practice for Installation Methods for Adhered Manufactured Stone Masonry Veneer

ASTM C1788 - Standard Specification for Non Metallic Plaster Bases (Lath) Used with Portland Cement Based Plaster in Vertical Wall Applications

ASTM E2556/E2556M – Standard Specification for Vapor Permeance Flexible Sheet Water-Resistive Barriers Intended for Mechanical Attachment

ASTM D226/D226M – Standard Specification for Asphalt Saturated Organic Felt Used in Roofing and Water Proofing

ASTM F1667 – Standard Specification for Driven Fasteners, Nails, Spikes, and Staples

# Table 1—AMSV Installation Requirements Summary[1]

| Backup Wall System[10] | Sheathing/ Substrate[5] | Water Resistive Barrier[2] | Lath Type | Lath Fasteners[3] | Scratch Coat | Setting Bed Mortar |
|---|---|---|---|---|---|---|
| Interior Wood or Steel Stud Framing; maximum spacing 16 in. (406 mm)[4] | • Gypsum Wall Board<br>• Plywood<br>• OSB<br>• Fiber Board | Optional[6] | Any approved lath[7] | Corrosion resistant; minimum penetration $^3/_4$ in. (19 mm) into wood framing member or $^3/_8$ in. (10 mm) into steel framing member | Type N or S mortar complying with ASTM C270 or ASTM C1714; minimum nominal thickness $^1/_2$ in. (13 mm) | See Table 2 |
| | • Cement Board | Not Required | Not Required | Not Applicable | Not Required | ANSI A118.4 or ANSI A118.15 |
| Exterior Wood or Steel Stud Framing; maximum spacing 16 in. (406 mm) | • Gypsum Wall Board<br>• Plywood<br>• OSB<br>• Fiber Board | Minimum two layers WRB | Any approved lath[7] | Corrosion resistant; minimum penetration $^3/_4$ in. (19 mm) into wood framing member or $^3/_8$ in. (10 mm) into steel framing member | Type N or S mortar complying with ASTM C270 or ASTM C1714; minimum nominal thickness $^1/_2$ in. (13 mm) | See Table 2 |
| | • Cement Board | Minimum two layers WRB | Not Required | Not Applicable | Not Required | ANSI A118.4 or ANSI A118.15 |
| Concrete or Concrete Masonry[8,9] | Not Applicable | Not Required | Not Required | Not Applicable | Not Required | See Table 2 |
| | Not Applicable | Optional[9] | Any approved lath[7,9] | Corrosion resistant concrete screws, masonry nails, or powder actuated fasteners[9] | Type N or S mortar complying with ASTM C270 or ASTM C1714; minimum nominal thickness $^1/_2$ in. (13 mm)[9] | See Table 2 |
| Clay Masonry[8,9] | Not Applicable | Optional[9] | Any approved lath[7] | Corrosion resistant concrete screws, masonry nails, or powder actuated fasteners | Type N or S mortar complying with ASTM C270 or ASTM C1714; minimum nominal thickness $^1/_2$ in. (13 mm) | See Table 2 |

1 Refer to AMSV manufacturer for installation recommendations addressing conditions not listed.
2 WRB complying with ASTM D226, ASTM E2556, or equivalent.
3 Fastener type and spacing must comply with ASTM C1063. Refer to Tables 3 and 4 for minimum fastening requirements for direct attachment of AMSV systems over continuous insulation.
4 For interior applications exposed to moisture, refer to corresponding exterior wall detailing requirements.
5 Sheathing/substrate material shall be approved for intended application and installed in accordance with manufacturer's recommendations.
6 A single layer of WRB is recommended where the sheathing/substrate is moisture sensitive.
7 Approved lath options include:
A) 2.5 lb/yd$^2$ (1.4 kg/m$^2$) (or heavier) self-furring metal lath meeting ASTM C847.
B) $^3/_8$ inch (9.5 mm) rib (high rib), 3.4 lb/yd$^2$ (1.8 kg/m$^2$) (or heavier), self-furring metal lath meeting ASTM C847.
C) Welded wire lath complying with ASTM C933.
D) 18 gauge (or heavier) woven wire lath meeting ASTM C1032.
E) Non-metallic lath complying with ASTM C1788.
F) Alternate lath products showing compliance with ICC-ES AC 275, or equivalent.
8 AMSV systems cannot be installed over existing anchored masonry veneers.
9 When installing AMSV over concrete or concrete masonry walls where good bond cannot be achieved or the concrete or concrete masonry is unsound, install AMSV over lath.
10 Backup systems should be designed to limit out-of-plane deflections to $^\ell/_{360}$ when subjected to 42% of the components and cladding wind pressure.

# Introduction

This guide focuses on the installation of AMSV systems for backup assemblies addressed in the summary table. Other backup systems, such as structural insulated panels (SIPs), may require a specifically-designed system of installation for AMSVs. AMSV systems should not be installed over deteriorating or unsound backup assemblies or exterior insulation and finishing systems (EIFS).

# Workmanship

This Installation Guide assumes that construction personnel have knowledge of the materials described and their knowledge and experience of proper methods of installation.

Prior to commencing activity related to the scope of this Guide, review all adjacent products and other work that precedes the installation of AMSV to ensure that proper workmanship is reflected and that there are no recognizable errors or deficiencies that may compromise the installation or performance of the AMSV.

## Quality

A successful project requires the use of quality materials, proper design and detailing for the application, and a high standard of care during installation. Unfortunately, the execution of these components in the field can be subject to value-engineering resulting in materials selected based solely on price and installation techniques that focus on speed rather than quality. While the performance of AMSV systems depends upon all three of these components, field workmanship issues tend to be the dominate source of problems when performance issues surface in the field. Installing AMSV in accordance with the recommended practices of this guide and ASTM C1780 helps to ensure AMSV systems perform as intended for decades.

## Building Code Requirements

Building code requirements vary from area to area. Check with local authorities for building code requirements for your area and application. Carefully read all sections of this guide and follow the manufacturer's installation instructions before proceeding with your AMSV application. In the event the manufacturer's installation instructions conflict with the intent of statements made in this document, contact the manufacturer for additional guidance.

## Project Site Requirements

Jobsite safety is outside of the scope of this guide, however, users should always follow proper job site safety requirements including local, state, and federal laws when installing AMSV products and systems.

# Material Requirements

## Units

AMSV units installed in accordance with this guide must meet the minimum requirements of ASTM C1670/C1670M.

## Flashing

All flashing and flashing accessories must be corrosion resistant and integrated with the WRB materials (if present). For exterior applications, flashing must be installed at all through-wall penetrations and at lower boundaries of AMSV installations. Flashing is not required for interior applications of AMSV systems not exposed to water. For interior applications that are exposed to water, treat as an exterior assembly.

In some applications, the use of self-adhering flashing, also known as flashing tape, can be used. It is recommended that applicable building codes as well as manufacturer's instructions are reviewed and followed to ensure they are permissible for the given project or application. Additionally, the manufacturer of the AMSV should be contacted prior to construction to ensure the compatibility of the two products.

## Rainscreen Drainage Plane Systems

Rainscreens are optional building techniques used to improve the drainage of incidental water behind the cladding and reduce drying time. Rainscreen products (such as drainage mats or formed polymer sheeting) or construction techniques (such as strapping or furring) that create a capillary break/air space between the cladding and the water resistive barrier can be effectively incorporated into AMSV applications. Refer to the manufacturer's recommendation for rainscreen / drainage system applications with adhered manufactured stone veneer wall systems. Details of various applications utilizing rainscreen drainage plane systems can be found in Figures 35-38. Building codes may allow a single layer of a water resistive barrier when a drainage space is incorporated in the wall system (i.e. rainscreen). Requirements for rainscreens vary by region. Verify local jurisdictional requirements regarding the use and application of rainscreens and/or drainage products.

## Weep Screeds and Casing Beads

Weep screeds and casing beads must be corrosion resistant, with weep screeds having a minimum vertical attachment flange of 3.5 inches (89 mm) that terminates behind the water resistive barrier (if present). The minimum thickness of metal weep screeds and casing beads should not be less than 0.0179 inches (0.45 mm) (26 gage). For plastic weep screeds or casing beads, the minimum thickness is 0.050 inches (1.3 mm).

## Lath

Multiple lath materials have been used successfully for the installation of AMSV systems, including:

- 2.5 lb/yd$^2$ (1.4 kg/m$^2$) (or heavier) self-furring metal lath meeting ASTM C847;
- $^3/_8$ inch (9.5 mm) rib (high rib), 3.4 lb/yd$^2$ (1.8 kg/m$^2$) (or heavier), self-furring metal lath meeting ASTM C847;
- Welded wire lath complying with ASTM C933;
- 18 gauge (or heavier) woven wire lath meeting ASTM C1032; or
- The lath product is consistent with the AMSV manufacturer's installation instructions and has an evaluation acceptance report from an accredited evaluation service showing compliance with ICC-ES Acceptance Criteria 275 (AC275), or equivalent, and ASTM C1788.

All lath and lath accessories must be corrosion resistant, consisting of either galvanized or stainless steel materials or consisting of materials complying with AC 275, and ASTM C1788. All lath material must be self-furred or use self-furring fasteners. Refer to the Summary Table of this guide for specific lath and fastener recommendations.

## Fasteners

Corrosion resistant fasteners are used to secure flashing and lath to the backup system. A variety of fasteners are available such as staples, screws, and nails, provided the heads or washers of these fasteners are large enough to not pull through the lath and the fastener is of sufficient length to penetrate into the supporting material. For specific fastener selection criteria, refer to ASTM C1063.

- Wood framing - Corrosion resistant staples, corrosion resistant roofing nails, or corrosion resistant screws and washers, of sufficient length to penetrate a minimum of $^3/_4$ inch (19 mm) into framing members.
- Metal framing or panels - Corrosion resistant, self-tapping screws with sufficient length to penetrate $^3/_8$ inch (9.5 mm) through metal studs or panels.
- Masonry or concrete walls or panels - Corrosion resistant concrete screws or powder actuated fasteners (or cap fastener).

## Cement Board

Cement board may be used in place of lath and scratch coat, if desired. When used, cement board must comply with ASTM C1325. They must also be evaluated for interior or exterior use in accordance with ICC-ES AC376 based on the desired applications. When using cement board, only modified mortars complying with ANSI A118.4 or ANSI A118.15 should be used as the setting bed mortar. Do not use conventional mortars (Type S or N) with cement board installations. Refer to ASTM C1780 and manufacturer recommendations for additional details on cement board installations. Refer to Figures 4a and 4b for references to the primary difference between lath and cement board applications. Other construction details illustrated in this guide are applicable to cement boards installations as well.

## Mortar

Mortars used for the installation of AMSV systems can be grouped into three different categories; scratch coat mortar, setting bed mortar, and pointing mortar. Depending upon the type of mortar used and whether it is batched on site or delivered premixed to the project, each mortar must meet minimum requirements as described below:

Scratch Coat Mortars – Scratch coat mortars are applied directly to the lath or substrate to which AMSV systems are adhered. As the name implies, this first layer of mortar is intentionally scratched or roughened before hardening to provide enhanced mechanical bond between the scratch coat and setting bed mortars. Recommendations for the scratch coat mortar are as follows:

- Site Mixed: Meets the requirements of ASTM C270 Type N or Type S
- Preblended: Meets the requirements of ASTM C1714 /C1714M Type N or Type S

Setting Bed Mortars – After the scratch coat mortar has cured sufficiently, the setting bed mortar is used to adhere the AMSV units to the backing. The setting bed mortar is applied directly to the scratch coat or to the back of the AMSV units (back-buttering), or a combination of both application methods. Recommendations for setting bed mortars based on specific applications are described as follows in Table 2.

Pointing Mortars – Pointing mortars, also referred to as grouting mortars or mortar used to grout mortar joints, are used to fill the joints between individual AMSV units once the setting bed mortar has sufficiently cured. Not all AMSV systems incorporated mortar between the units, while others allow the distance between units to be varied to create alternative architectural finishes. Recommendations for the pointing mortar are as follows:

- Site Mixed: Meets the requirements of ASTM C270 Type N or Type S
- Preblended: Meets the requirements of ASTM C1714/C1714M Type N or Type S

It is important to note that mortars mixed with higher amounts of cement will tend to be less workable and may be prone to increased shrinkage cracking, but will provide greater bond strength. Type N mortars are generally easier to work with than Type S mortars due to the higher cement content of Type S mortars.

# Table 2—Application Based Setting Bed Mortar Recommendations[1]

| Application | Type N Mortar (ASTM C270 or ASTM C1714) | Type S Mortar (ASTM C270 or ASTM C1714) or ANSI A118.1 Mortar | ANSI A118.4 or ANSI A118.15 Mortar |
|---|---|---|---|
| Interior Applications | | | |
| Less than 10 ft (3 m) in height above finished floor | Recommended | Recommended | Recommended |
| All other interior applications | Not Recommended | Recommended | Recommended |
| Exterior Single Family Residential Applications | | | |
| Grouted[2] | Not Recommended | Recommended | Recommended |
| All other exterior single family residential applications | Not Recommended | Recommended | Recommended |
| Exterior Commercial Applications | | | |
| Less than 10 ft (3 m) in height above finished grade | Not Recommended | Recommended | Recommended |
| All other exterior commercial applications | Not Recommended | Not Recommended | Recommended |
| Special Applications | | | |
| Installed directly on cement board | Not Recommended | Not Recommended | Recommended |
| Non-vertical applications[3,4] | Not Recommended | Not Recommended | Recommended |

1 If the surface area of an AMSV unit exceeds 1 $ft^2$ (0.1 $m^2$) or 24 in. (610 mm) in any dimension, then install using setting bed mortar complying with ANSI A118.4 or ANSI A118.15.
2 Requires a minimum nominal mortar joint thickness of $^1/_4$ in. (6.4 mm) around AMSV units.
3 Requires a fastening system designed by a professional engineer.
4 AMSV units should not be subjected to pedestrian or vehicular traffic.

## General Mortar Considerations

When considering mortar selections, verify the mortar can provide a minimum shear bond strength of 50 lb/ $in.^2$ (345 kPa) when tested in accordance with ASTM C482, is consistent with the stone manufacturer's recommendations, and is suitable for installation of adhered manufactured stone veneer. Prepackaged/preblended mortars should be mixed and installed per mortar manufacturer's instructions

In some cases additives or admixtures are added to mortars to modify one or more plastic or hardened properties of the mortar; such as workability enhancers, water repellents, or bond enhancers. When a modifier is introduced to a mortar comply with ASTM C270 or ASTM C1714, the additional requirements of ASTM C1384 must also be met. Modifiers used in the production of mortar complying with ANSI A118.4 or ANSI A118.15 are specifically designed to increase the mortar's bond strength.

As reflected in Table 2, modified mortars containing bond enhancers and mortars with higher cement contents are better suited for challenging installations or where increased bond strength is desired. Examples of these installations include exterior applications or when directly bonding to substrates such as cement board. As not all mortar admixtures are compatible or interchangeable, consult with mortar or additive manufacturers to ensure compatibility of mortar and admixture components.

# Surface Preparation

Verify that the surface to which the AMSV is to be installed is structurally sound, free of any coatings or materials that would inhibit bonding, and capable of supporting the intended AMSV system. The majority of the discussion and details in this guide focuses on the installation of AMSV systems on backup systems consisting of wood or steel framing with rigid sheathing and concrete or concrete masonry construction; however, virtually any backup system can be used when properly designed and prepared to receive AMSV systems.

Masonry walls, poured-in-place concrete walls, and concrete tilt up panels must be free of dirt, waterproofing, paint, form oil, or any other substance that could inhibit the mortar bond and must readily accept/absorb water in order to achieve good bond. The International Concrete Repair Institute, (ICRI), provides guidance for concrete surface preparation and assessment. The surfaces intended to receive AMSV units must have a rough texture to ensure good mortar bond. Refer to ICRI Technical Guideline 310.2 for additional information on concrete surface preparation, including information on

Concrete Surface Profile (CSP), a standardized method to measure concrete surface roughness. A CSP equal to or greater than 2 is usually acceptable for the installation of AMSV over concrete and masonry assemblies. If necessary, cleaning may be done with power washing or mechanical methods (i.e. shot or bead blasting). If a bondable surface cannot be achieved, attach lath and scratch coat before installing AMSV. This guide does not address the installation of AMSV systems over open stud backup systems.

## Wall Systems with Exterior Continuous Insulation

AMSV may be installed on walls insulated with continuous insulation such as foam insulation. See Tables 3 and 4 for requirements on fastening over continous insulation, which are adopted from similar provisions in Chapter 26 of the International Building Code. The requirements are contained within the IBC. The allowable insulation thicknesses are based upon the fastener type, fastener spacing, cladding weight, and supporting backup system.

## Water Resistive Barrier

Where a water resistive barrier (WRB) is required, it should be installed in two separate layers in shingle fashion, starting from the bottom of the wall. The inner layer of WRB should be installed, along with flashings, to create a drainage plane. The outer layer of WRB is intended to keep the scratch coat from contacting the inner layer of WRB. The upper layer of the WRB should lap on top of the lower layer by a minimum of 2 inches (51 mm). The vertical joints of the WRB should be lapped a minimum of 6 inches (152 mm). Inside and outside corners must be overlapped a minimum of 16 inches (406 mm) past the corner in both directions. The WRB should be installed in accordance with the manufacturer's recommendations and be integrated with all flashing accessories, adjacent WRBs, doors, windows, penetrations, and cladding transitions.

Acceptable WRBs:

- Two layers of WRB complying with ASTM D226, E2556, or approved equal.
- As discussed in the "Rainscreen Drainage Plane Systems", building codes may allow a single layer of a WRB to be used when a drainage space is incorporated in the wall system. Requirements for the rainscreens vary by region. Verify with the local jurisdictional requirements regarding the use an application of rainscreens. Refer to Figures 35-38 for details on such construction method.
- When transitioning to another cladding (such as that shown in Figure 8), refer to the applicable building code requirements for WRB behind that specific cladding system. Despite the number of layers required for the non-AMSV cladding, there must be two (2) layers of WRB present behind the AMSV.
- Some types of continuous insulation may be substituted for the inner layer of WRB provided it is installed and sealed and/or taped in accordance with the insulation manufacturer's installation instructions and ap-

## Table 3—Cladding Minimum Fastening Requirements for Direct Attachment of AMSV Over Insulation for Steel Framing[a]

| Cladding Fastener through Foam Sheathing into: | Cladding Fastener Type and Minimum Size[b] | Claddening Fastener Horizontal Spacing ( in.) | Claddening Fastener Vertical Spacing ( in.) | Maximum Thickness of Foam Sheathing[c] (in.) Cladding System Weight[d] | | |
|---|---|---|---|---|---|---|
| | | | | 11 psf | 18 psf | 25 psf |
| Steel framing (minimum penetration of steel thickness plus 3 threads) | #8 screw into 33 mil steel or thicker | 16 | 6 | 2.95 | 2.20 | 1.45 |
| | #10 screw into 33 mil steel or thicker | 16 | 6 | 3.50 | 2.70 | 1.95 |
| | #10 screw into 43 mil steel or thicker | 16 | 6 | 4.00 | 4.00 | 3.60 |

For SI: 1 in. = 25.4 mm; 1 pound per square foot (psf) = 0.0479 kPa, 1 pound per square inch = 0.00689 MPa.
DR = design required;
[a] Steel framing shall be minimum 33 ksi steel for 33 mil and 43 mil steel and 50 ksi steel for 54 mil steel or thicker.
[b] Screws shall comply with the requirements of AISI S200.
[c] Foam sheathing shall have a minimum compressive strength of 15 pounds per square inch in accordance with ASTM C578 or ASTM C1289.
[d] Cladding System Weight includes the installed weight of the AMSV units, setting bed mortar, lath, and scratch coat.

# Table 4—Cladding Minimum Fastening Requirements for Direct Attachment of AMSV over Insulation for Wood Framing[a]

| Cladding Fastener through Foam Sheathing into: | Cladding Fastener Type and Minimum Size[b] | Claddening Fastener Horzintal Spacing ( in.) | Claddening Fastener Vertical Spacing ( in.) | Maximum Thickness of Foam Sheathing[c] (in.) | | |
|---|---|---|---|---|---|---|
| | | | | Cladding System Weight[d] | | |
| | | | | 11 psf | 18 psf | 25 psf |
| Wood framing (minimum 1 1/4 in. pentration) | 0.113 in. diameter nail | 16 | 6 | 1.45 | 0.75 | DR |
| | 0.120 in. diameter nail | 16 | 6 | 1.70 | 0.90 | 0.55 |
| | 0.131 in. diameter nail | 16 | 6 | 2.15 | 1.20 | 0.75 |
| | 0.162 in. diameter nail | 16 | 6 | 3.55 | 2.05 | 1.40 |

For SI: 1 inch = 25.4 mm; 1 pound per square foot (psf) = 0.0479 kPa
DR = design required
[a.] Wood framing shall be Spruce-Pine-Fir or any wood species with a specific gravity of 0.42 or greater in accordance with AFPA/NDS.
[b.] Nail fasteners shall comply with ASTM F1667, except nail length shall be permitted to exceed ASTM F1667 standard lengths.
[c.] Foam sheathing shall have a minimum compressive strength of 15 psi in accordance with ASTM C578 or ASTM C1289.
[d] Cladding System Weight includes the installed weight of the AMSV units, setting bed mortar, lath, and scratch coat.

proved for such applications. Continuous insulation is commonly applied on the exterior side of the framing or on the exterior side of sheathing, runs continuously, and has minimal thermal bridging. Ensure WRB(s) selected are approved for wall applications. Some WRB's intended for roofs are not appropriate for walls. For example, 15 pound felt is not the same product as No. 15 felt. For details of this practice, please refer to the continuous insulation figures shown throughout the figures section of this guide.

## Lath

The installation of lath should be in accordance with ASTM C1063. Lath should be applied horizontally (perpendicular to framing, if present) per manufacturer's instructions, and should overlap a minimum of 1 in. (25 mm) at the vertical seams and a minimum of 1/2 in. (13 mm) at the horizontal seams. Vertical seams should be staggered. Lath should be wrapped around inside and outside corners a minimum of 12 in. (305 mm). Lath should be fastened every 7 in. (178 mm) vertically on each stud. The spacing of studs should not exceed 16 in. (406 mm). A similar spacing should be used on concrete or masonry wall surfaces, when used. Do not place seams at inside/outside corner framing.

If not installed in accordance with ASTM C1063, alternate lath installation practices should be in accordance with manufacturer's instructions. Acceptable installation practices for metal lath should be evaluated in accordance with AC191 and ASTM C933.

While recommendations vary, existing codes and standards do not stipulate the orientation of the lath "cups" (keys) once installed. More important than the orientation of the lath cups is ensuring the lath is embedded within, and bonded to, the mortar scratch coat for a successful AMSV installation. Lath is considered to be embedded within the mortar scratch coat when there is a 1/4 in. (6 mm) nominal thickness of mortar between the back plane of the lath and the back plane of the scratch coat for at least one-half (50%) of the surface area of the installation.

Please refer to Figures 1 and 2 for general details on lath installation based on backing.

## Flashings/Weep Screeds/Casing Bead/ Movement Joints

All flashing and accessory detailing pieces should be corrosion resistant.

Verify that all flashing, including roofing kickout flashing, has been properly installed. Although roof flashings are not part of the wall cladding system, they are necessary for proper water management. Flashing material should extend above horizontal terminations, roofing material, and drainage planes or drainage products.

All flashing material should be integrated with water resistive barriers to mitigate water penetration into the structure. The WRB should overlap the weep screed flange.

Some applications may not require the use of flashing, weep screeds, and casing beads to prevent water

penetration. In cases where there is no WRB present, a weep screed is usually not required but a weep screed or casing bead can still be used for aesthetic purposes. In cases where a drip edge is needed based on a cladding transition, then flashing is required. The use of both flashing and a weep screed simultaneously is not typically necessary.

Movement Joints - Different elements and materials within any structure move differently in response to applied loads or as a result of fluctuations in temperature or moisture content. In determining if and where movement joints may be needed as part of an AMSV installation, consideration should be given to where differential movement is expected–for example, at the intersection of dissimilar materials; or where movement may be concentrated–for example, at the transition between a framed backup assembly and a concrete masonry assembly. Additional information is available in "Are Control Joints Needed with Adhered Concrete Masonry Veneer" through MVMA's website: www.masonryveneer.org.

Plan ahead with the various trades to integrate flashing and water resistive barriers to effectively shed water down and out of the wall system. This may require the preceding trade on the job to install flashing or WRBs for integration with the next trade on the job.

## Clearances

On exterior frame walls, weep screeds and other base flashings should be held a minimum of 4 in. (102 mm) above grade or a minimum of 2 in. (51 mm) above paved surfaces. This minimum can be reduced to 1/2 in. (13 mm) if the paved surface is a walking surface supported by the same foundation that supports the wall. See Figure 5.

Where the backing is concrete or masonry, maintain 2 in. (51 mm) clearance from grade or ½ in. (13 mm) from a paved surface provided that frost heave of adjacent surfaces is taken into consideration.

## Interior Applications

Interior applications in non-wet locations (areas not exposed to water) for AMSV are similar to exterior applications with the following alternatives:

- Two layers of WRB are not necessary behind the lath and scratch coat. A single layer of WRB is recommended protect moisture sensitive materials during AMSV installation.
- Interior applications are not subjected to the same fluctuations in temperature and moisture as exterior applications. As such, the criteria for clearances used for exterior applications are typically not necessary. Nevertheless, differential movement between different materials must still be accounted for.
- Flashings, weep screeds, and casing beads are not necessary.

# Installation of Adhered Manufactured Stone Veneer

Prior to commencing installation of AMSV, ensure the WRB and flashing are properly installed and integrated. Refer to the flashing details, referenced in this guide, for detailing around windows, doors, through-wall penetrations, and AMSV terminations.

After the lath is installed, apply a nominal 1/2 in. (13 mm) thick layer of mortar ensuring the lath is completely encapsulated with mortar. The mortar should be applied with sufficient pressure and thickness to fully embed the lath in mortar. Once the mortar is thumbprint hard, scratch (score) the surface horizontally to create the mortar scratch coat.

Moist curing the mortar scratch coat will help reduce cracking and ensure proper hydration during curing. Before applying AMSV, the mortar scratch coat should be dampened so that the surface appears wet but free of standing water.

Before installing AMSV, lay out a minimum of 25 sq ft (2.3 $m^2$) of AMSV units at the jobsite so there is a variety of sizes, shapes, and colors from which to choose. Mixing AMSV sizes, shapes, textures and color will allow for variety and contrast in the design to achieve the desirable finished project. Follow AMSV manufacturers recommendations regarding mixing of product to achieve desired results.

The following guidance for grouted and tight-fit application of adhered masonry veneer applies to conventional Type N and Type S mortars. If a modified mortar is used, some of the working properties and installation techniques may vary from those of conventional Type N or Type S mortars. Consult the mortar manufacturer for guidance and instructions. For typical details of AMSV systems, please refer to Figures 1-5.

## Grouted Adhered Manufactured Stone Veneer Application

Tip: Installing AMSV from the top down will minimize cleanup requirements.

Prior to the application of mortar to the scratch coat or the back of the AMSV, the scratch coat and back of the AMSV should be moistened so that the surfaces appear damp but are free of standing water.

The back of each AMSV should be entirely buttered with mortar to a nominal thickness of 1/2 in. (13 mm). Cover the entire back of the AMSV, not just the perimeter. Buttered AMSV should be firmly worked onto the scratch coat and slid slightly back and forth or with a slight rotating motion to set the AMSV. Modified mortars, complying with ANSI A118.4 or ANSI A118.15, may have a different "feel" than non-modified mortars.

Achieve mortar squeeze out in a volume that results in a full setting bed covering the scratch coat completely. As an alternative to the back-butter only method, mortar may be troweled onto the scratch coat, completely covering the scratch coat. Or, both mortar application techniques may be combined. The resulting thickness of the scratch coat and setting bed should be nominally 1 in. (25 mm) measured from the outer surface of the WRB to the back surface of the unit.

With the proper mortar mix, moisture content, and scratch coat preparation, the installer will feel the mortar start to grab within a few seconds of the setting movement process. At this point, no further movement of the unit should be made as the bond will be broken. If the AMSV is inadvertently moved after initial set has begun, it should be removed, mortar scraped off the back of the AMSV and scratch coat, and then reinstalled following the application process.

Grouting the joints should be completed only after there is sufficient cure time of the installed AMSV units; when mild contact with AMSV units will not break the bond to the backup system. Grouting may be done with a grout bag, filling joints to the desired depth, ensuring that mortar is forced into all voids. Grout should be "thumbprint hard" before tooling the joints. The curing time required before the grout is ready will vary significantly with temperature and humidity. Use a wooden raking stick or pointing tool to tool the joints to the desired depth. Extra precaution should be taken while tooling so the surface of the AMSV is not damaged. Clean off remaining grout debris on the AMSV surface with a dry, soft-bristled brush.

To prevent mortar smearing, DO NOT use a wet brush to treat uncured mortar joints.

## Tight Fitted Adhered Manufactured Stone Veneer Application

Refer to Mortar section for additional guidance regarding mortar selection. For this installation technique, refer to the General Mortar Considerations section.

The back of the AMSV and the scratch coat should be moistened with the surfaces appearing damp but free of standing water.

The back of each AMSV should be entirely buttered with mortar to a nominal thickness of 1/2 in. (13 mm). Cover the entire back of the AMSV, not just the perimeter. Buttered AMSV should be firmly worked onto the scratch coat and slid slightly back and forth to set the AMSV.

Achieve mortar squeeze out in a volume that results in a full setting bed which covers the scratch coat completely. As an alternative to the back-butter only method, mortar may be troweled onto the scratch coat, completely covering the scratch coat. Or, both mortar application techniques may be combined. The resulting thickness of the scratch coat and setting bed should be nominally 1 in. (25 mm) measured from the outer surface of the WRB to the back surface of the unit.

With the proper mortar mix, moisture content and scratch coat preparation, the installer will feel the mortar start to grab within a few seconds of the setting movement process. At this point, no further movement of that AMSV should be made as the bond will be broken. If the AMSV is inadvertently moved after initial set has begun, it should be removed, mortar scraped off the back of the AMSV and scratch coat, and then reinstalled following the application process.

Tight fitted AMSV should be applied from the corners toward the middle of a wall, and from the bottom toward the top of the wall.

## Cold Weather Application

AMSV applications should be protected from temperatures below 40°F (4°C) during and immediately following installation. The use of anti-freeze admixtures to lower the freezing point of the mortar is not recommended. Accelerating admixtures shall comply with ASTM C1384; accelerating admixtures containing calcium chloride are not permitted. AMSV pieces containing visible frozen moisture shall not be installed.

The cold weather practices defined in TMS 602 should be followed for the installation of AMSV systems.

## Hot Weather Application

If the environmental conditions during installation exceed 90°F (32°C) additional water may be needed on the scratch coat surface and the backs of the AMSV being installed. Providing shade and/or frequent misting of the wall may be required. Consult with mortar manufacturer to determine if hot weather mortar mix options are available. The hot weather practices defined in TMS 602 should be followed for the installation of AMSV systems.

## Cleaning the Adhered Manufactured Stone Veneer

Refer to AMSV manufacturer recommendations on cleaning and maintenance. Do not use harsh chemicals for cleaning, such as acid, or use abrasive tools such as wire brushes or power washers.

## Coating Adhered Manufactured Stone Veneer

Refer to the AMSV manufacturer for recommendations regarding the use of repellant, sealers, or other topically applied coatings used for water penetration resistance, graffiti resistance, or surface sealing.

### Alternative Installation Methods/ Materials

This guide covers common installation practices for AMSV systems. Alternative installation materials and methods not included in this guide may be introduced into the marketplace. Example: Exterior installation methods using cementitious adhesive mortars with a direct application to a substrate that may include coatings applied as loadbearing bonded water-proof membranes.

Alternative installation materials and methods along with their test methods and evaluation criteria are being developed. As a designer, contractor, or installer, you may wish to utilize these materials and/or methods in lieu of the recommended methods included in this guide. Users should verify that the alternative method(s) will meet or exceed the recommended installation practices presented in this guide.

Refer to manufacturer's recommendations for additional information regarding the use of alternative installation methods or materials.

## Cautions

The following precautions should be taken to ensure a successful and durable AMSV installation.

- Do not subject AMSV to direct or frequent water contact. Examples include avoiding sprinklers directly spraying on surfaces, pools, and Jacuzzis. Also, downspouts or drainage pipes should be placed so that water is not frequently moistening the AMSV units.
- Do not subject AMSV to contact with de-icing materials, salt, cleaning chemicals, pool chemicals, or other harsh chemicals. Prolonged exposure to these conditions may discolor the AMSV or result in surface damage.
- The installation of AMSV over open stud construction (no sheathing) is not covered in this Guide. Refer to recommendations from the AMSV manufacturer.
- Retaining Walls—the details in this Guide only cover installation of AMSV on retaining walls and required waterproofing for the soil side of the wall (Figure 39). Other details of construction of retaining walls, including water management behind the wall, are outside the scope of this Guide.
- Do not use AMSV on exterior stair risers (or similar situations) where exposure to de-icing chemicals, snow and ice removal tools, where standing water is likely to occur, or when appropriate clearances cannot be maintained.
- Do not use AMSV in applications with potential exposure in direct flame such as return into a firebox of a wood or gas-burning fireplace.

# Figure 1. Installation Over Wood Framing

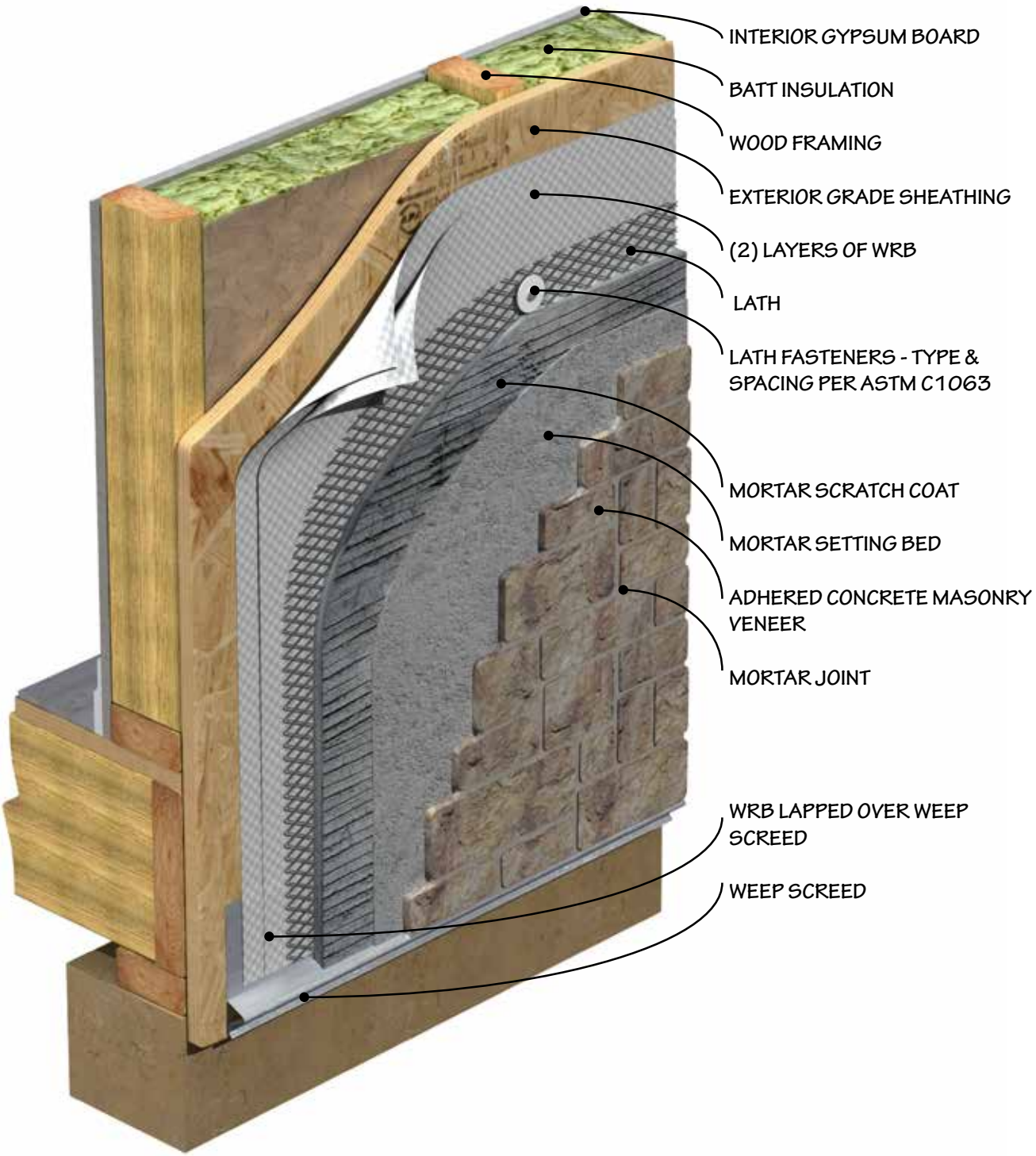

# Figure 2. Installation Over Concrete Masonry Units

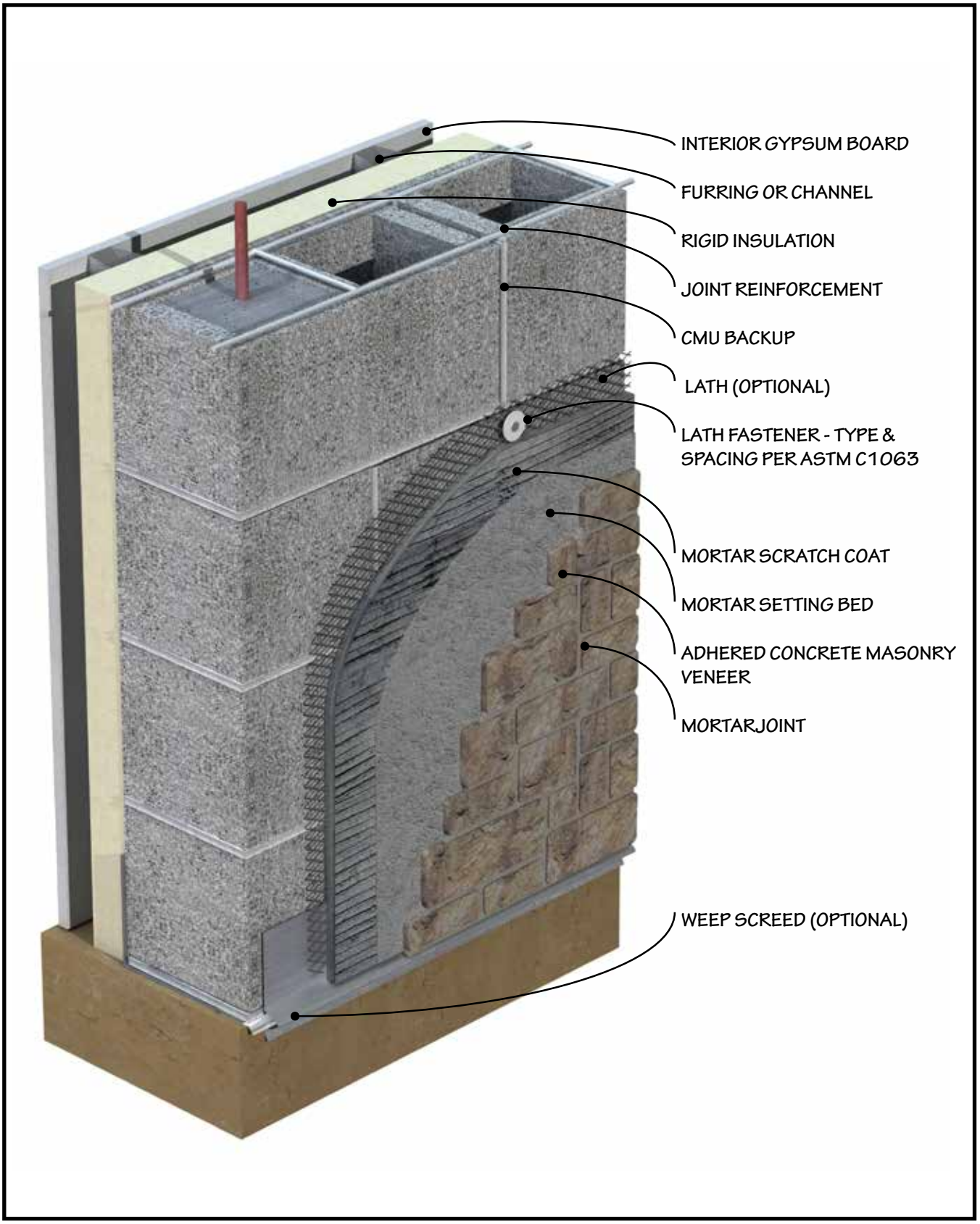

# Figure 3. Wall Assembly Transition

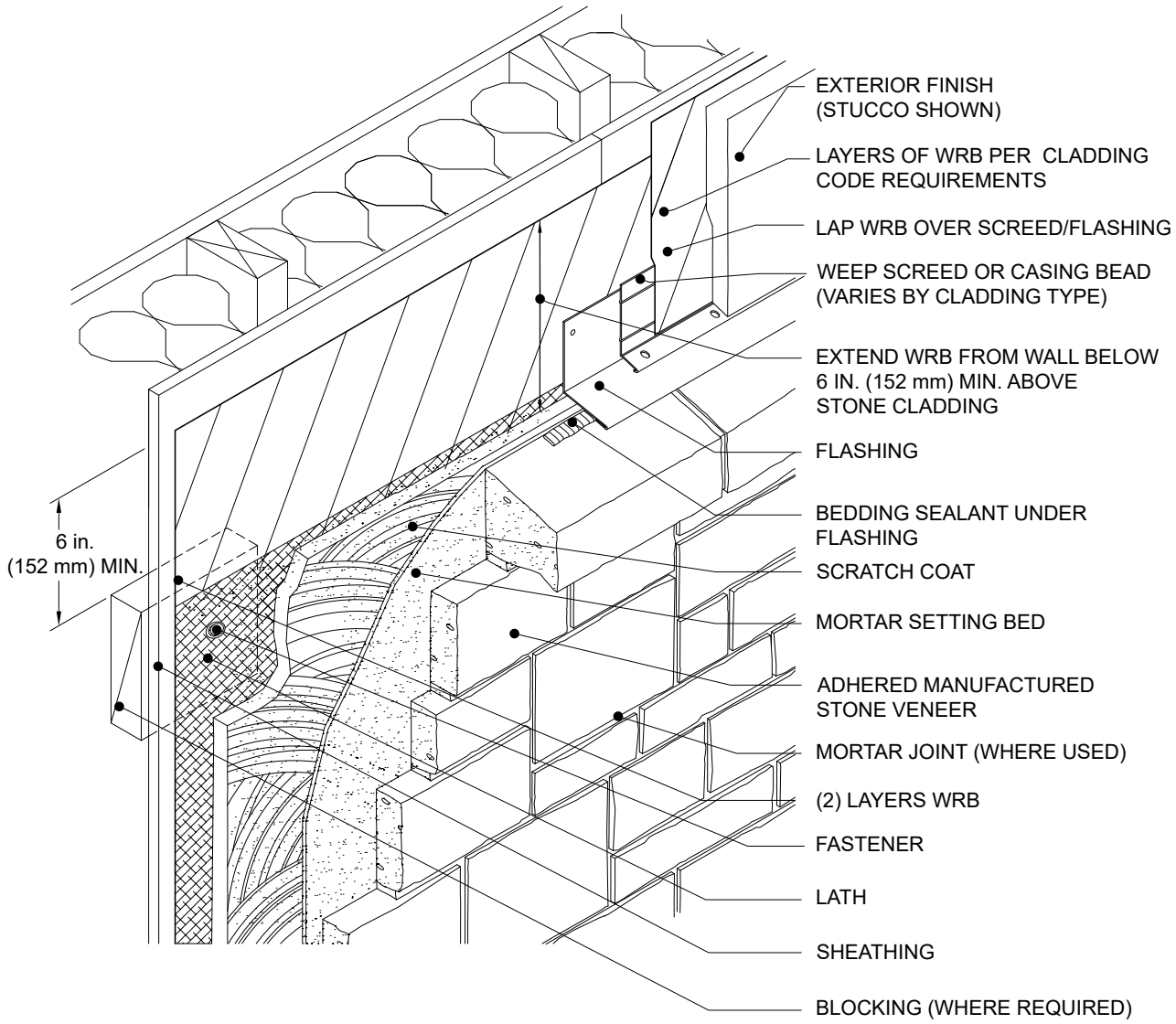

# Figure 4a. Typical Frame Wall Section

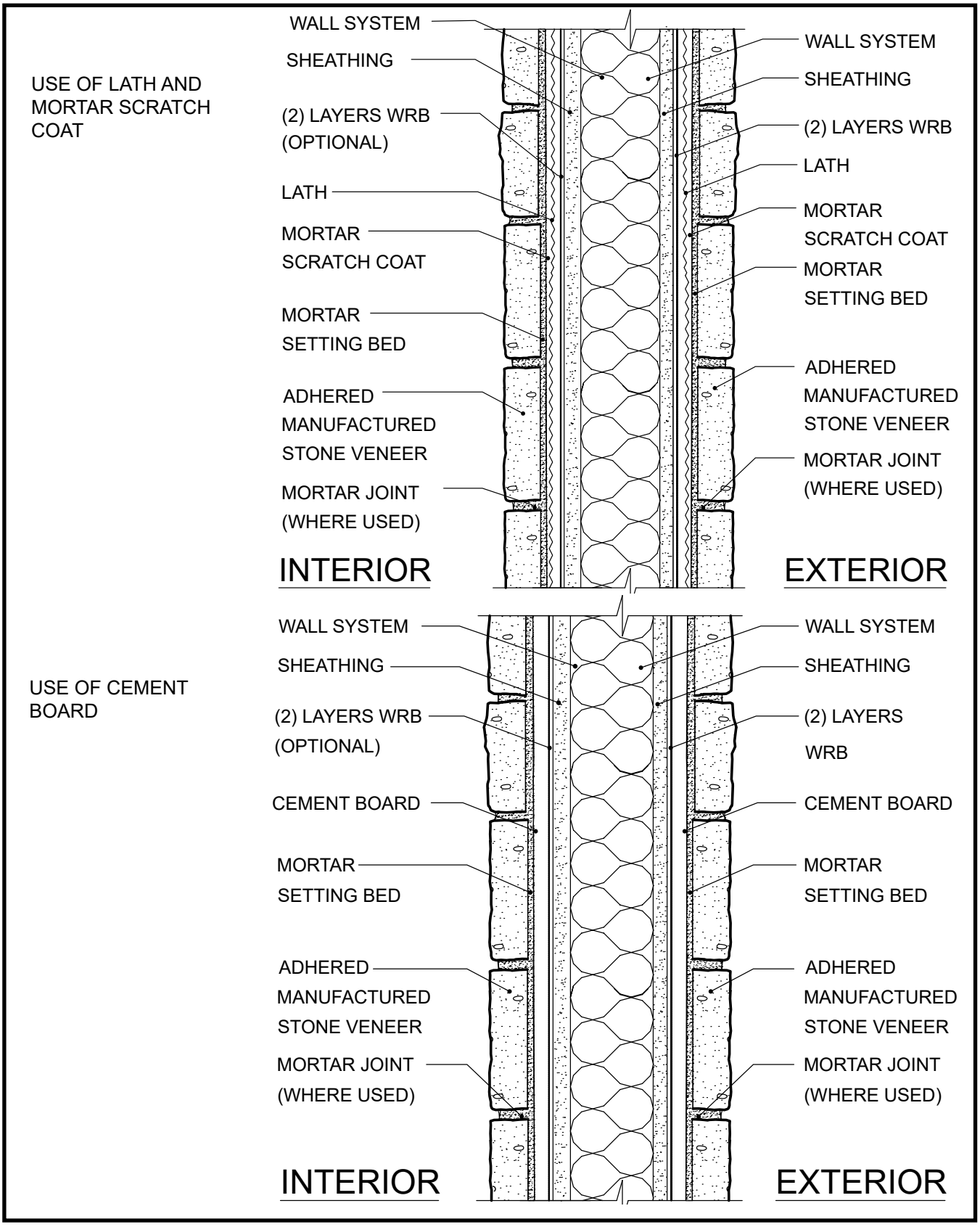

# Figure 4b. Typical Wall Frame Section with Continuous Rigid Insulation

USE OF LATH AND MORTAR SCRATCH COAT

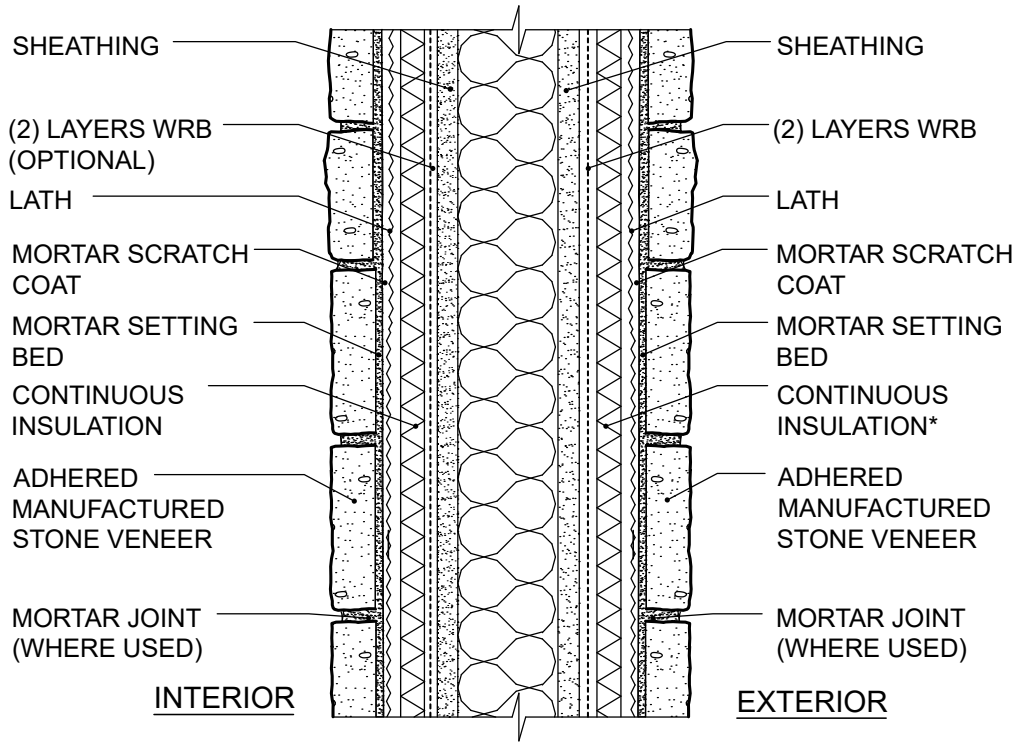


USE OF CEMENT BOARD

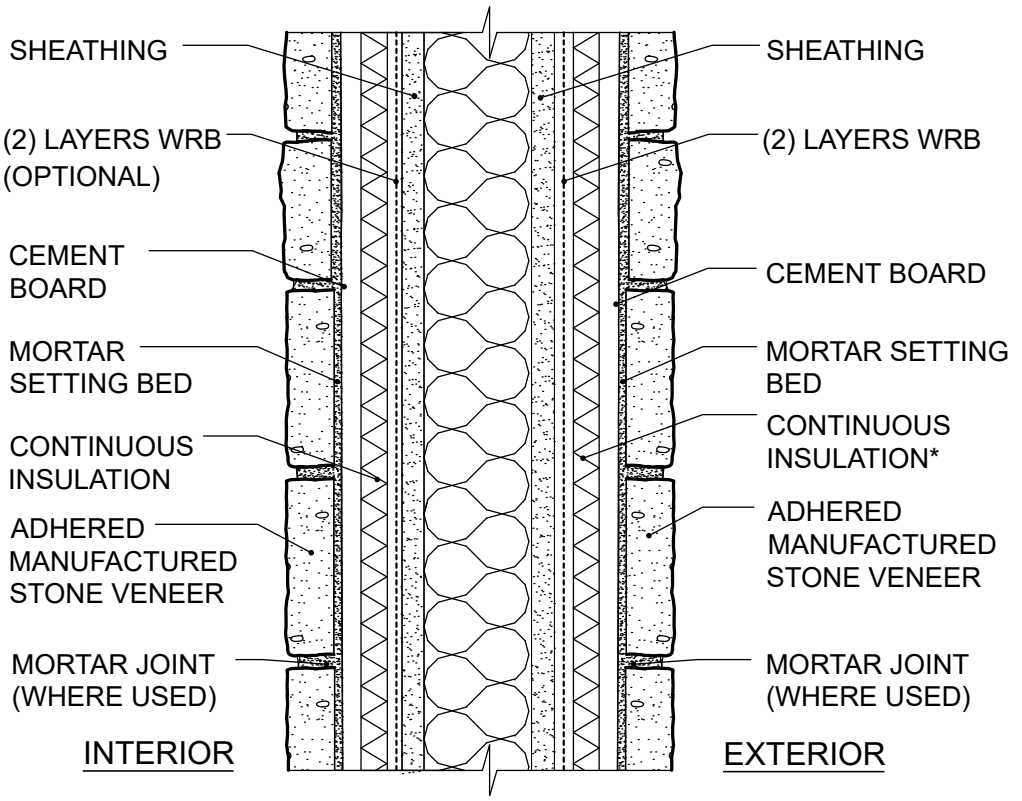


*SEE TABLES 3 and 4 FOR FASTENER REQUIREMENTS OVER CONTINUOUS INSULATION

# Figure 5a. Foundation Wall Base

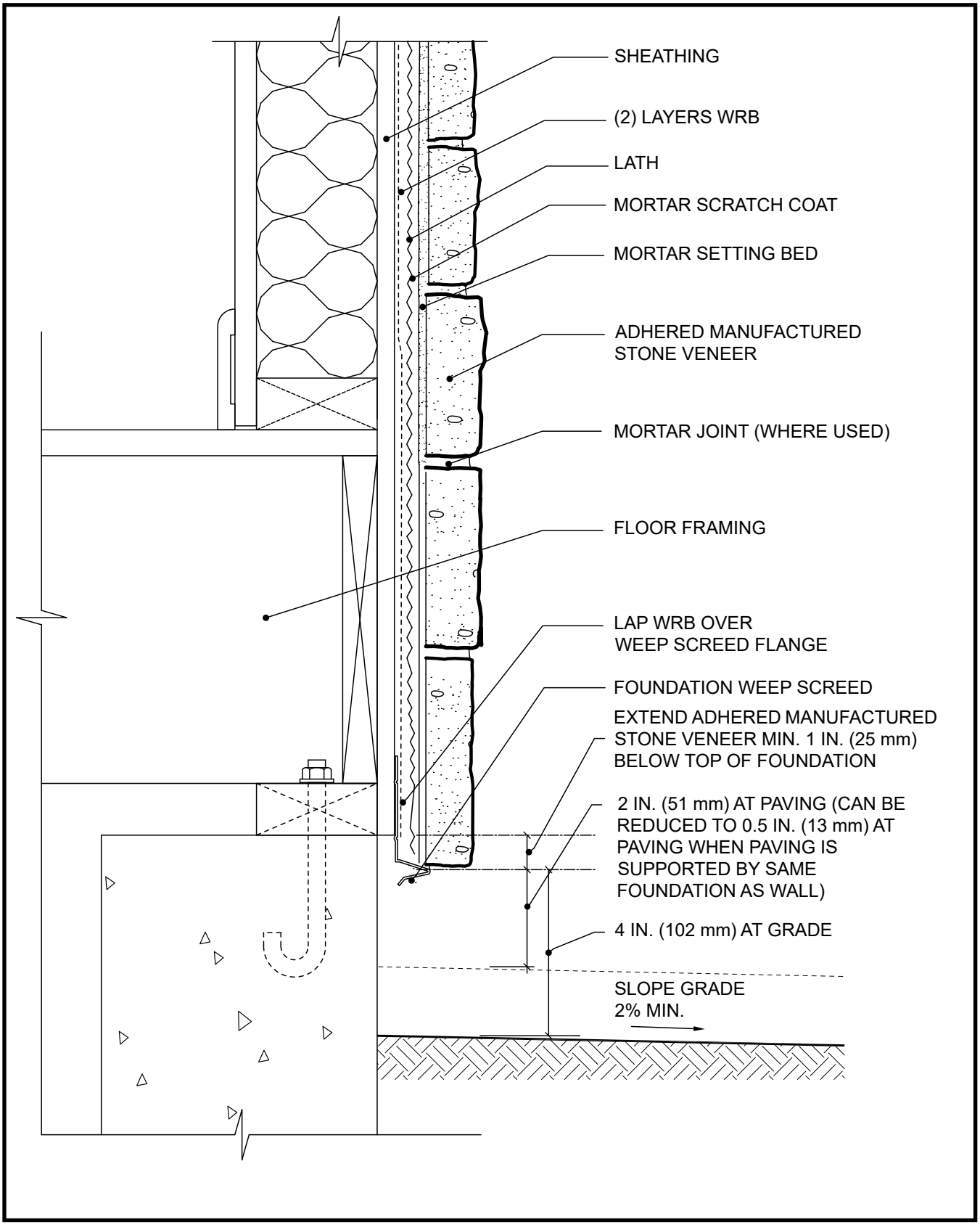

# Figure 5b. Foundation Wall Base Over Continuous Rigid Insulation

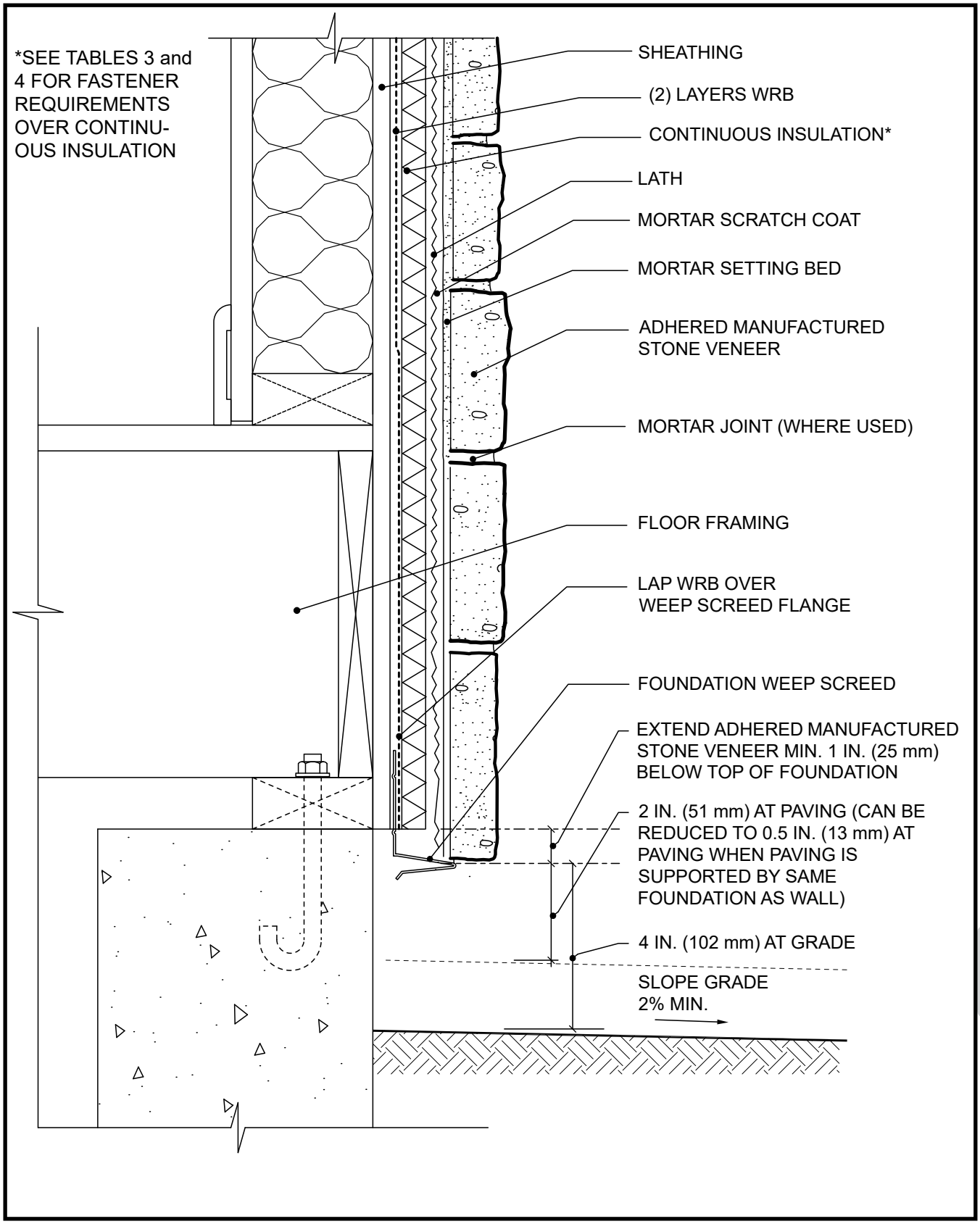

# Figure 6. Foundation Wall Base – AMSV Overlapping Foundation

NOTE 1: FOR CONTINUOUS INSULATION APPLICATIONS, REFER TO FIGURE 5b.

NOTE 2: REFER TO FIGURE 7 FOR AN ALTERNATIVE DETAIL FOR ACCOMMODATING DIFFERENTIAL MOVEMENT THAT MAY BE PRESENT WHEN TRANSITIONING BETWEEN FOUNDATION AND ABOVE GRADE WALLS.

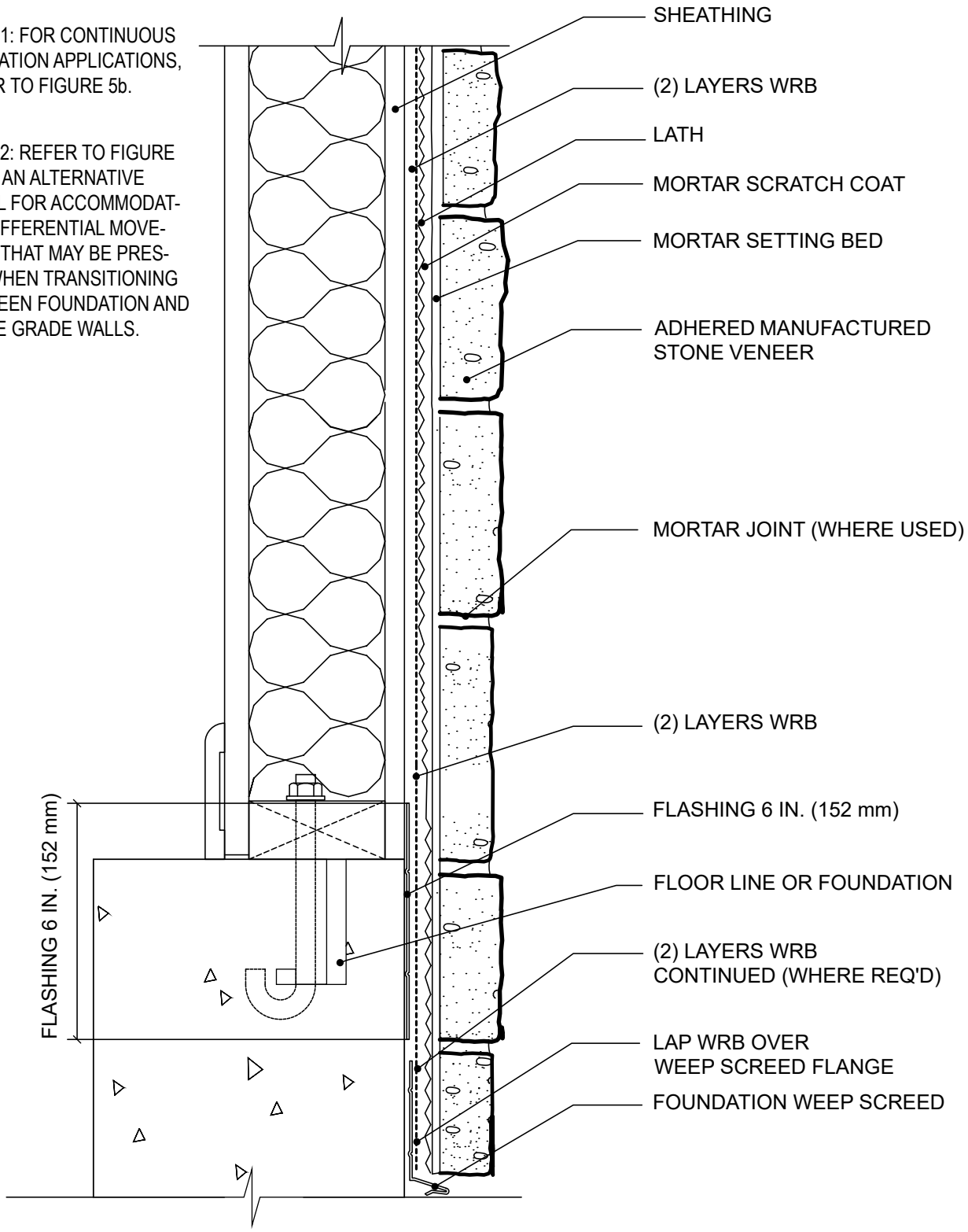

# Figure 7. Foundation Wall – Transition to AMSV Continuing Down Foundation

NOTE 1:
FOR CONTINUOUS INSULATION APPLICATIONS, REFER TO FIGURE 5b.

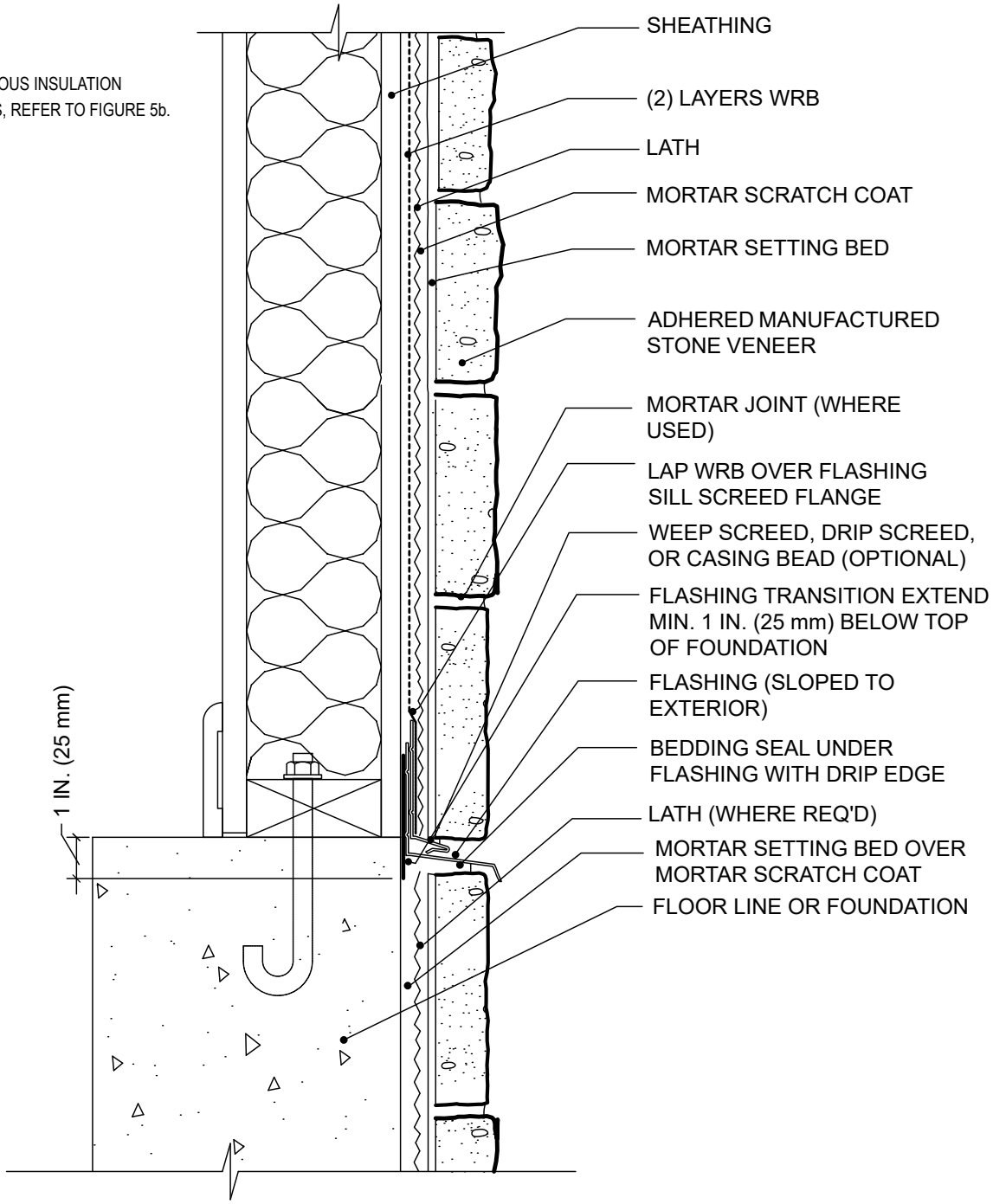

# Figure 8a. Cladding Transition

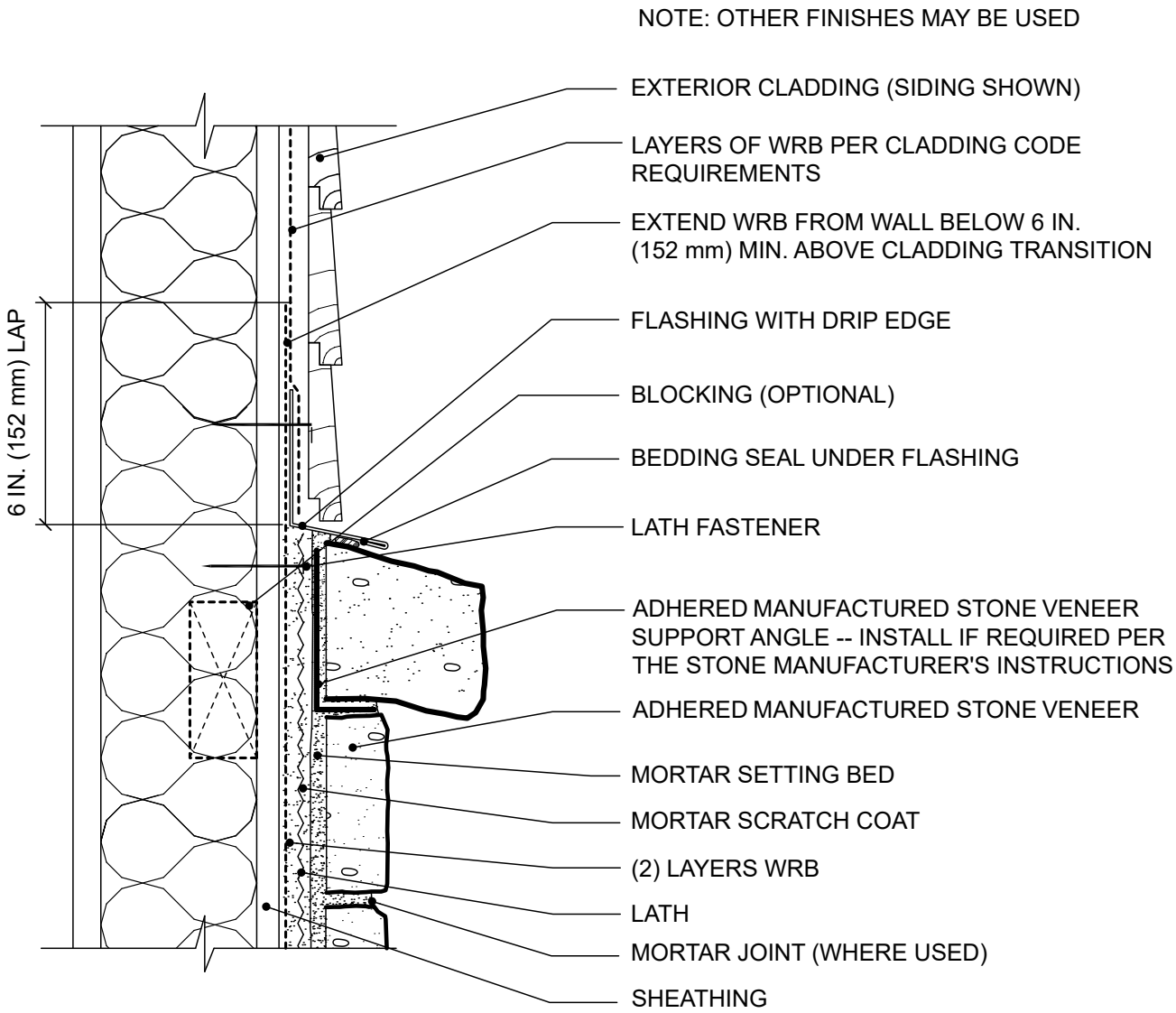


Flashing should be installed prior to the adhered manufactured stone. Water resistive barrier laps over the vertical leg of flashing for positive drainage. Optional support angle shown. Verify installation requirements with adhered manufactured stone veneer manufacturer.

# Figure 8b. Cladding Transition Over Continuous Rigid Insulation

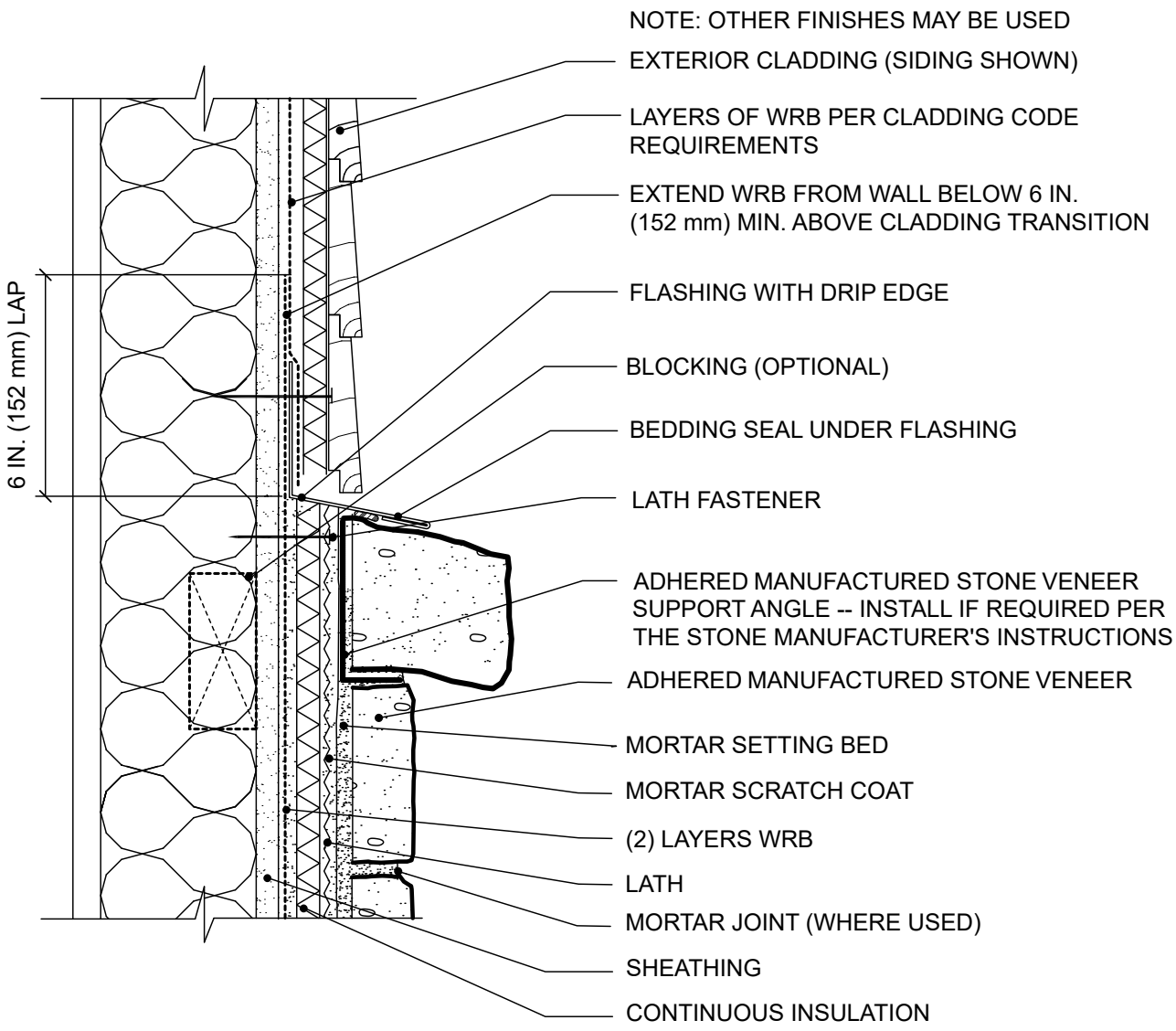


Flashing should be installed prior to the adhered manufactured stone. Water resistive barrier laps over the vertical leg of flashing for positive drainage. Optional support angle shown. Verify installation requirements with adhered manufactured stone veneer manufacturer.

# Figure 9a. Outside Corner

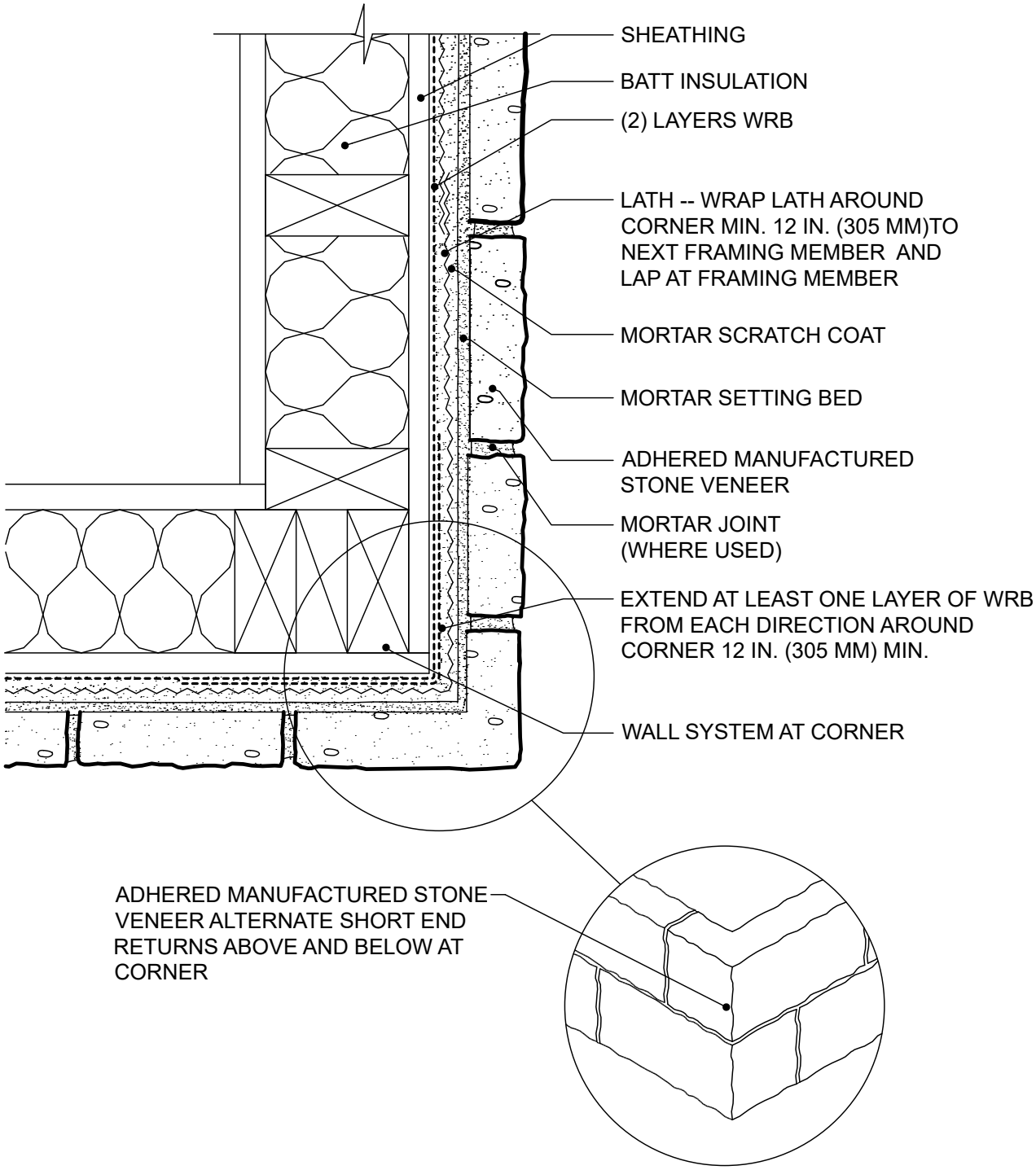

# Figure 9b. Outside Corner Over Continuous Insulation

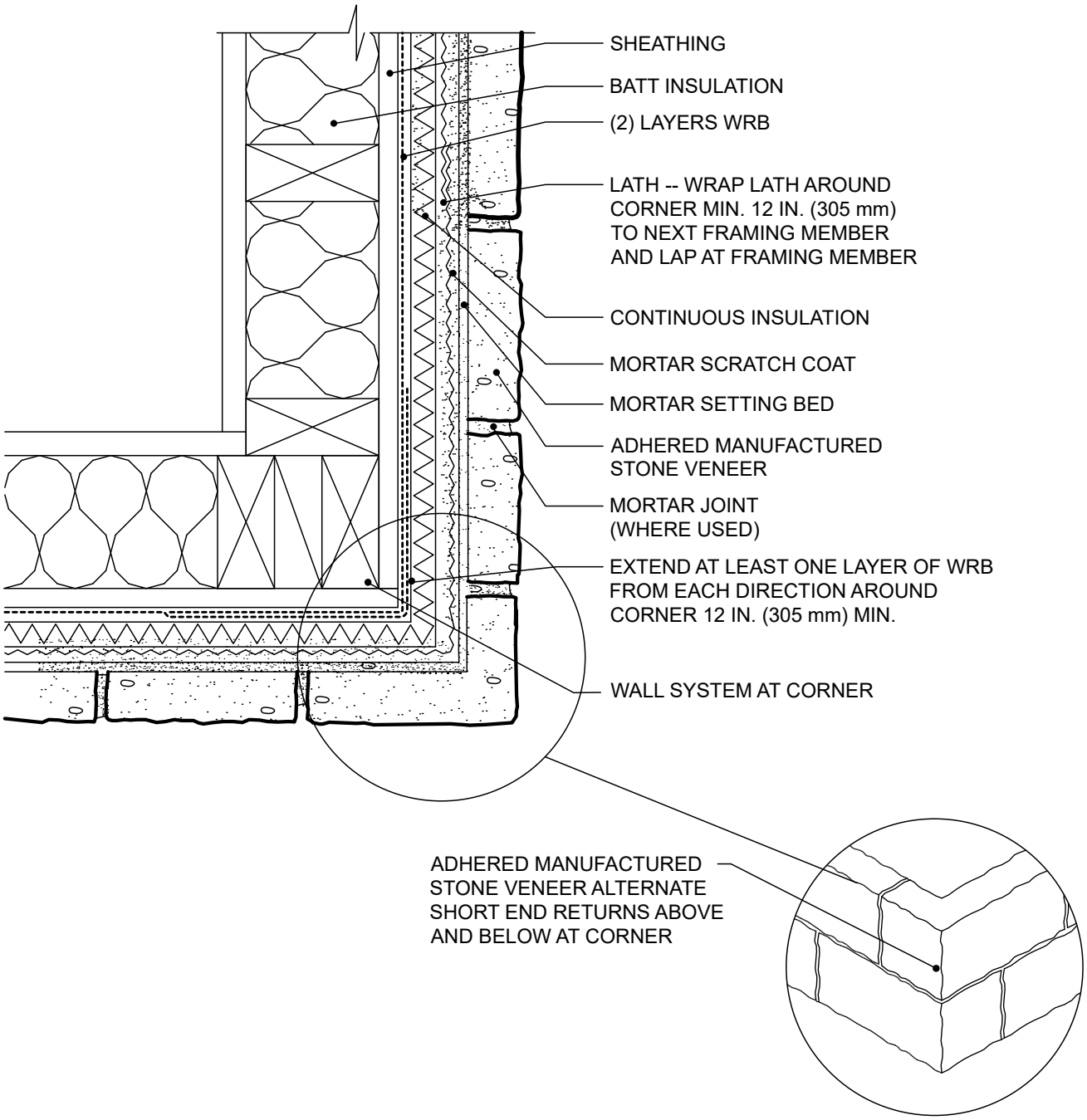

# Figure 10a. Inside Corner

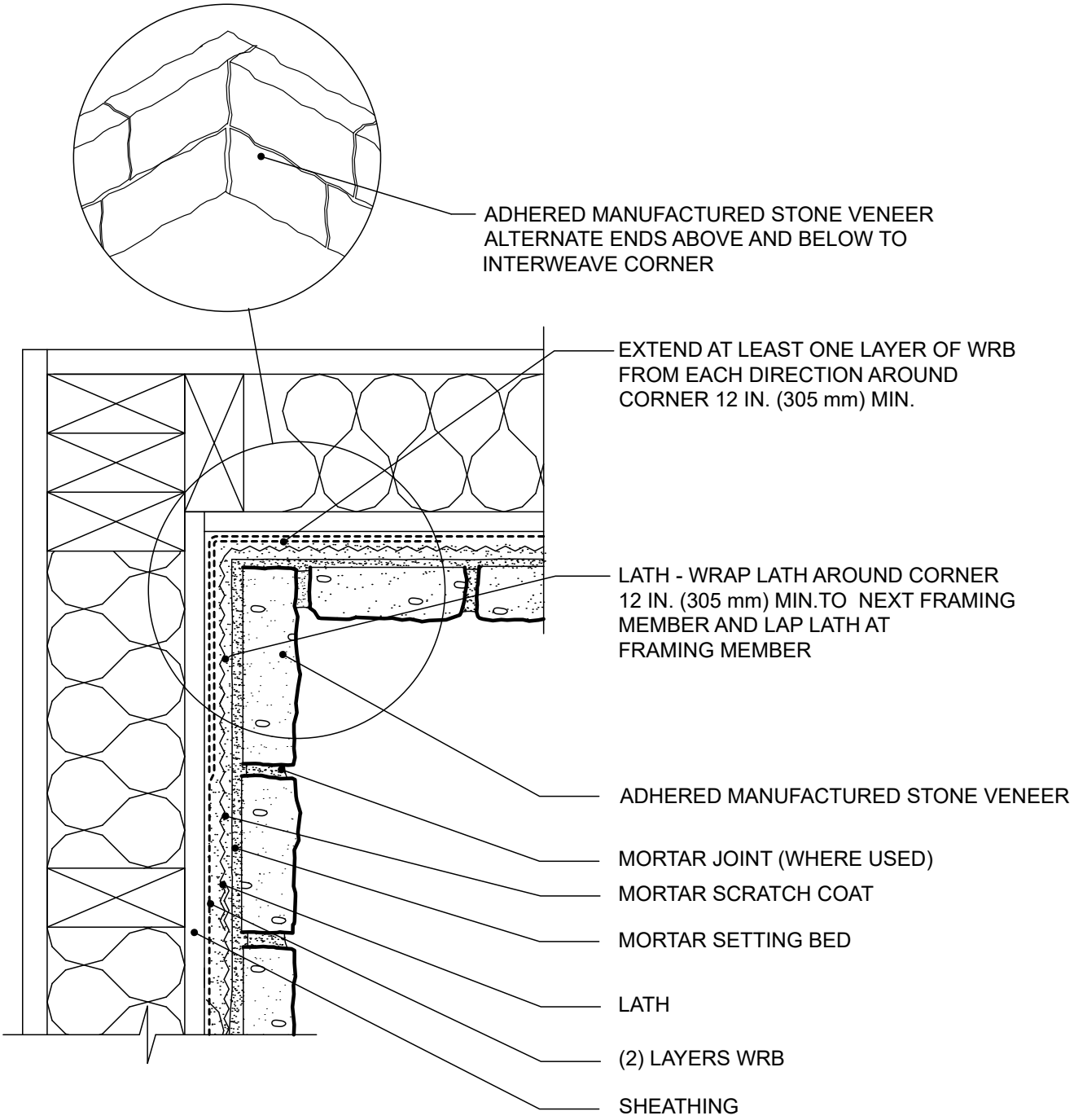

# Figure 10b. Inside Corner Over Continuous Insulation

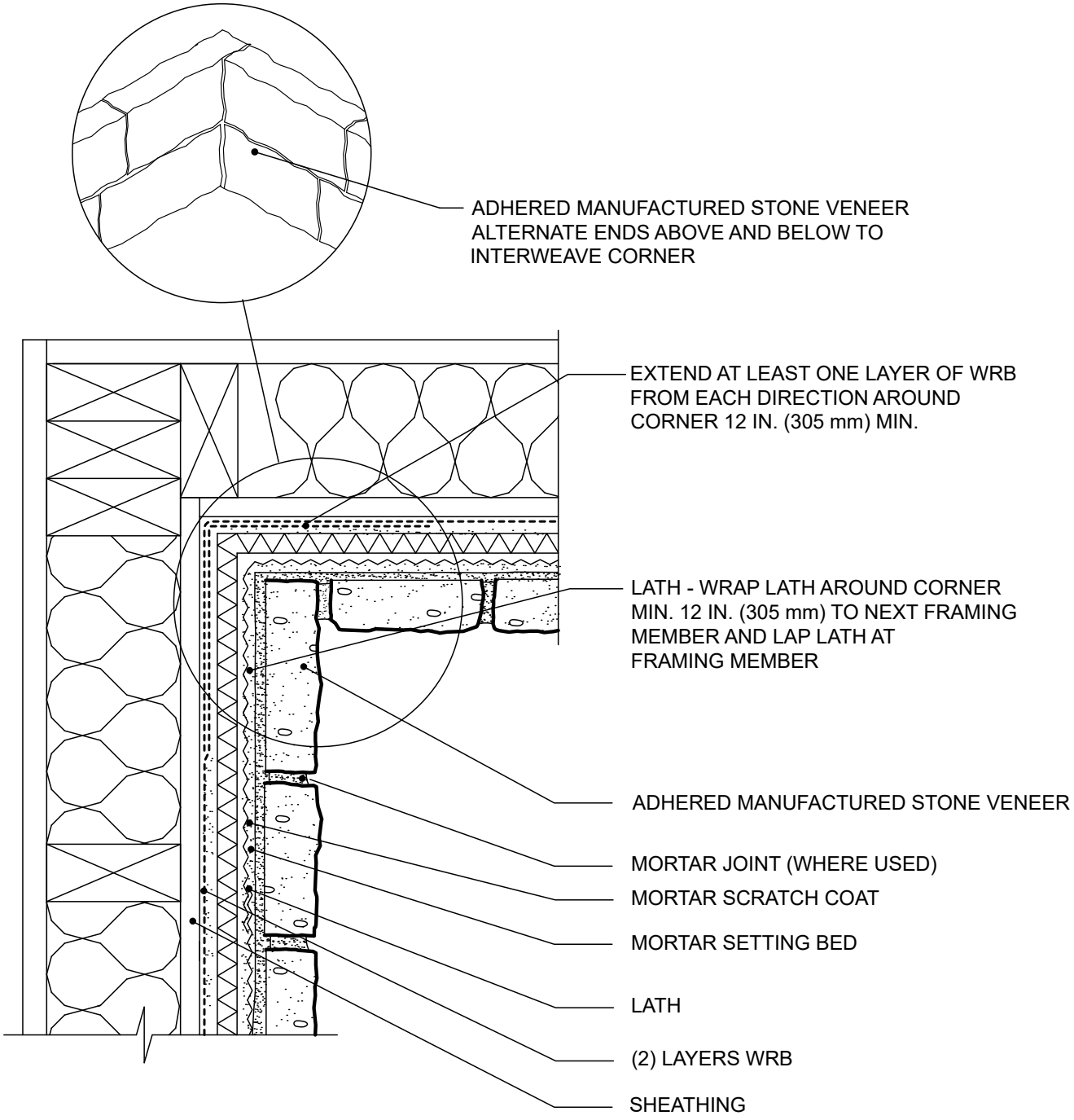

# Figure 11a. Horizontal Transition

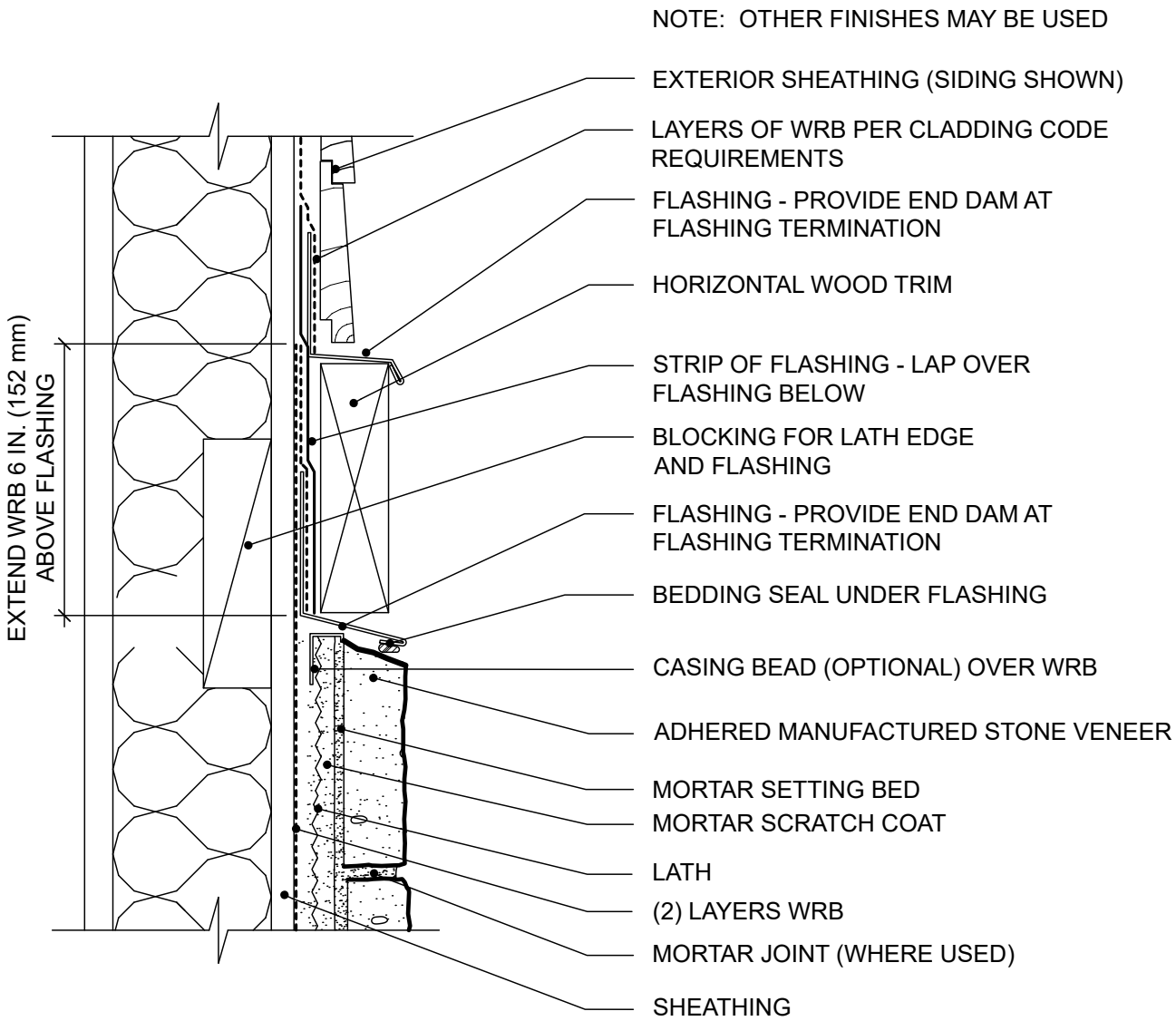

# Figure 11b. Horizontal Transition Over Continuous Insulation

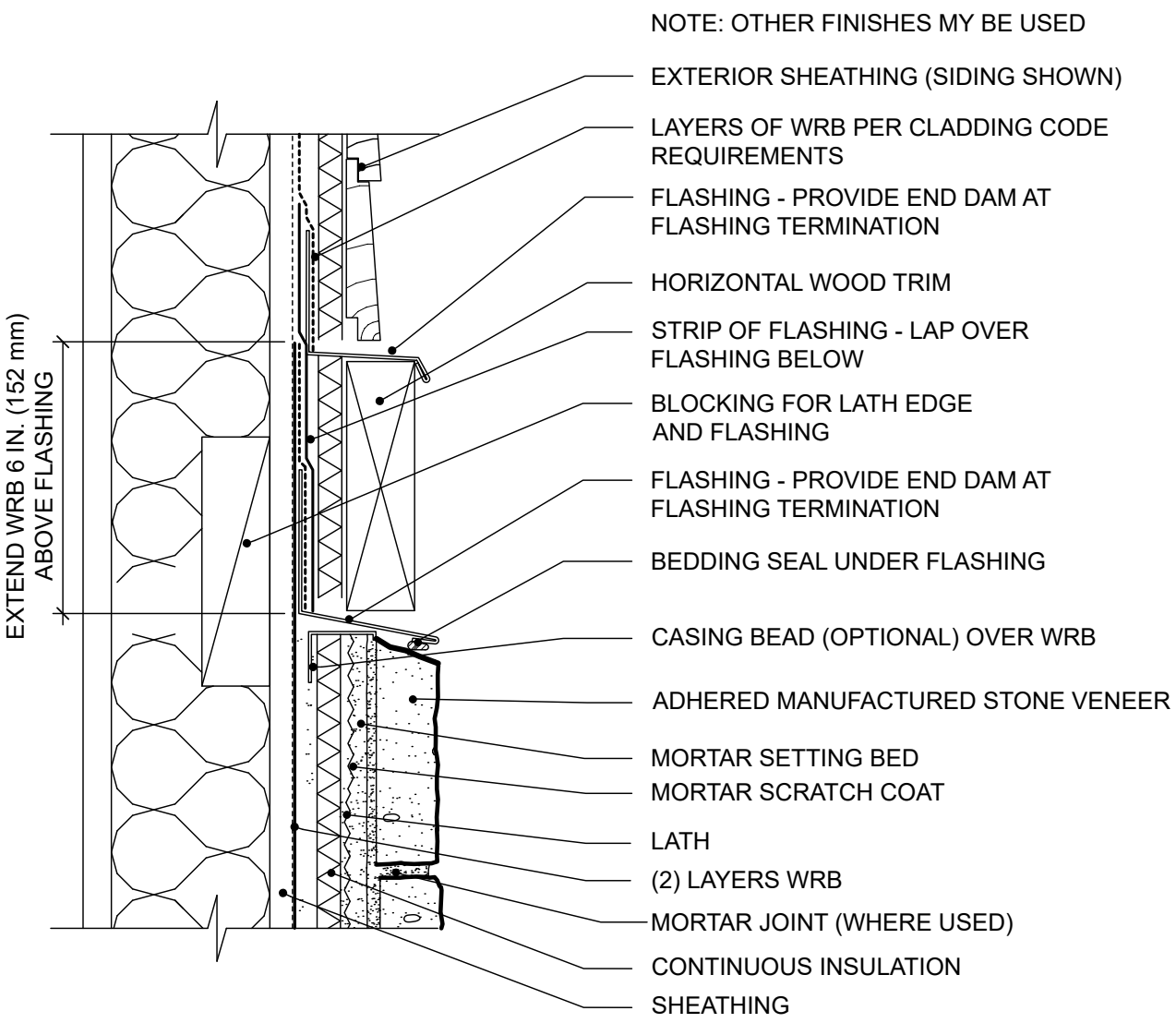

# Figure 12a. Vertical Transition

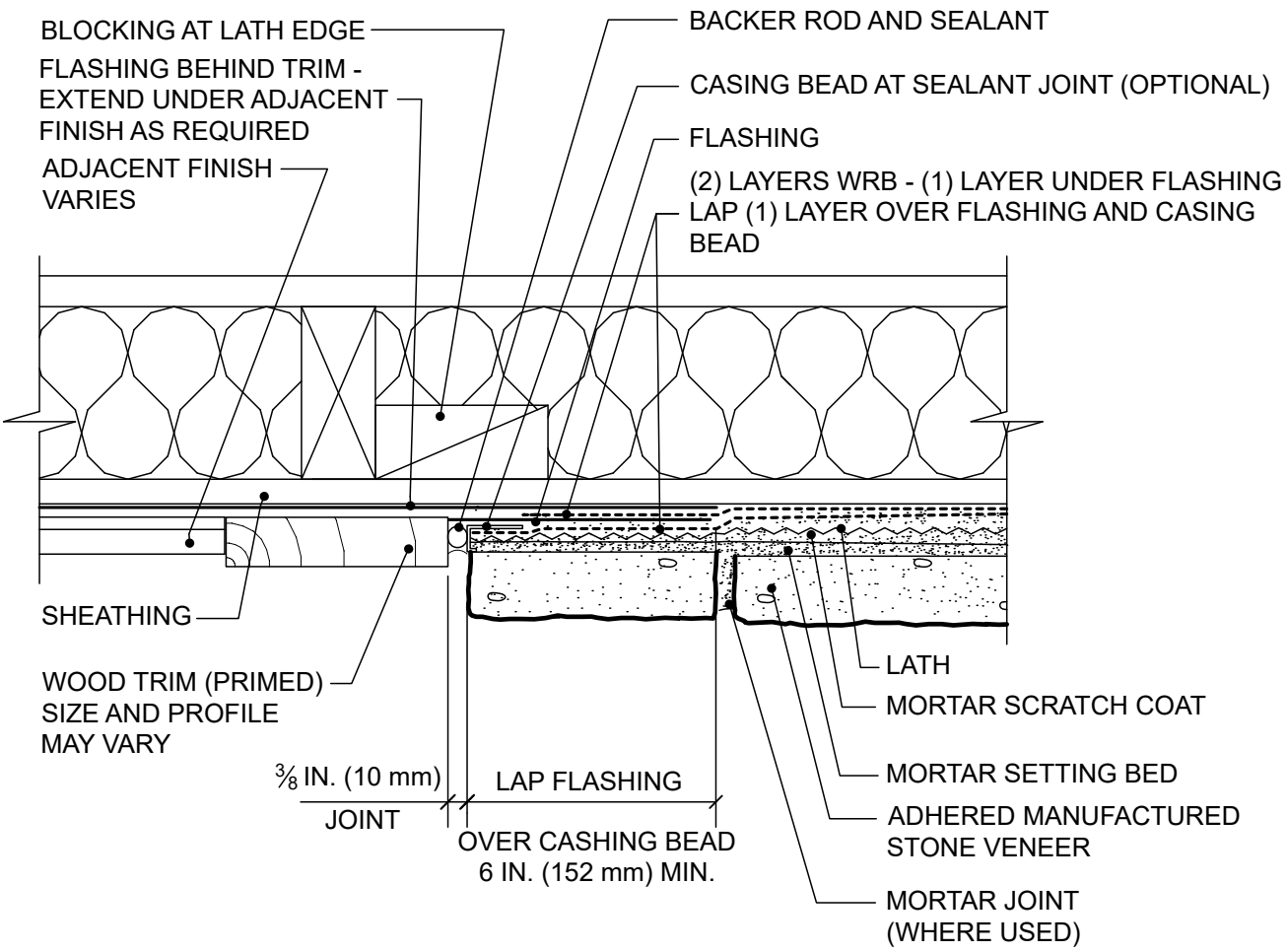

# Figure 12b. Vertical Transition Over Continuous Insulation

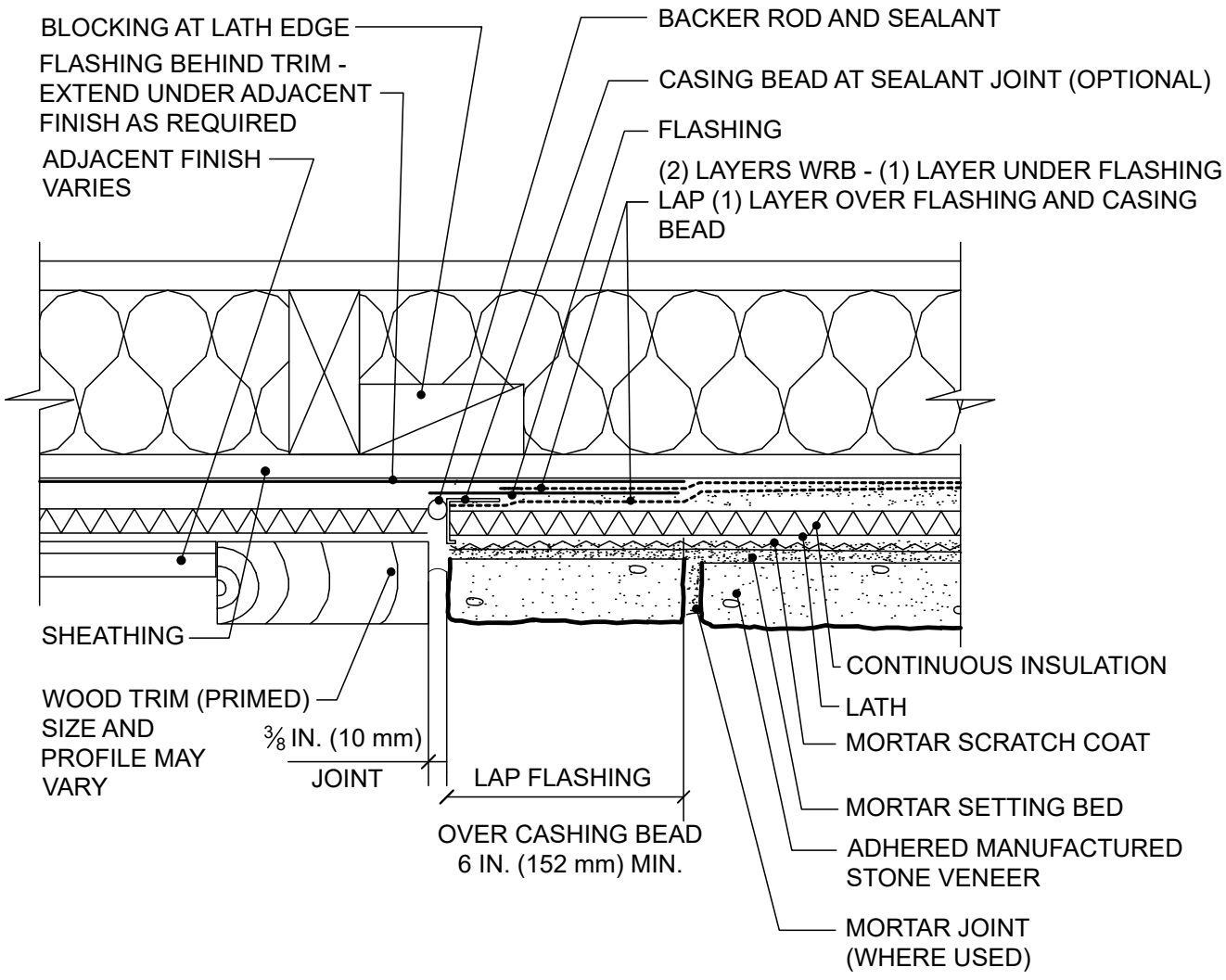

# Figure 13a. Open Eave - Overhang

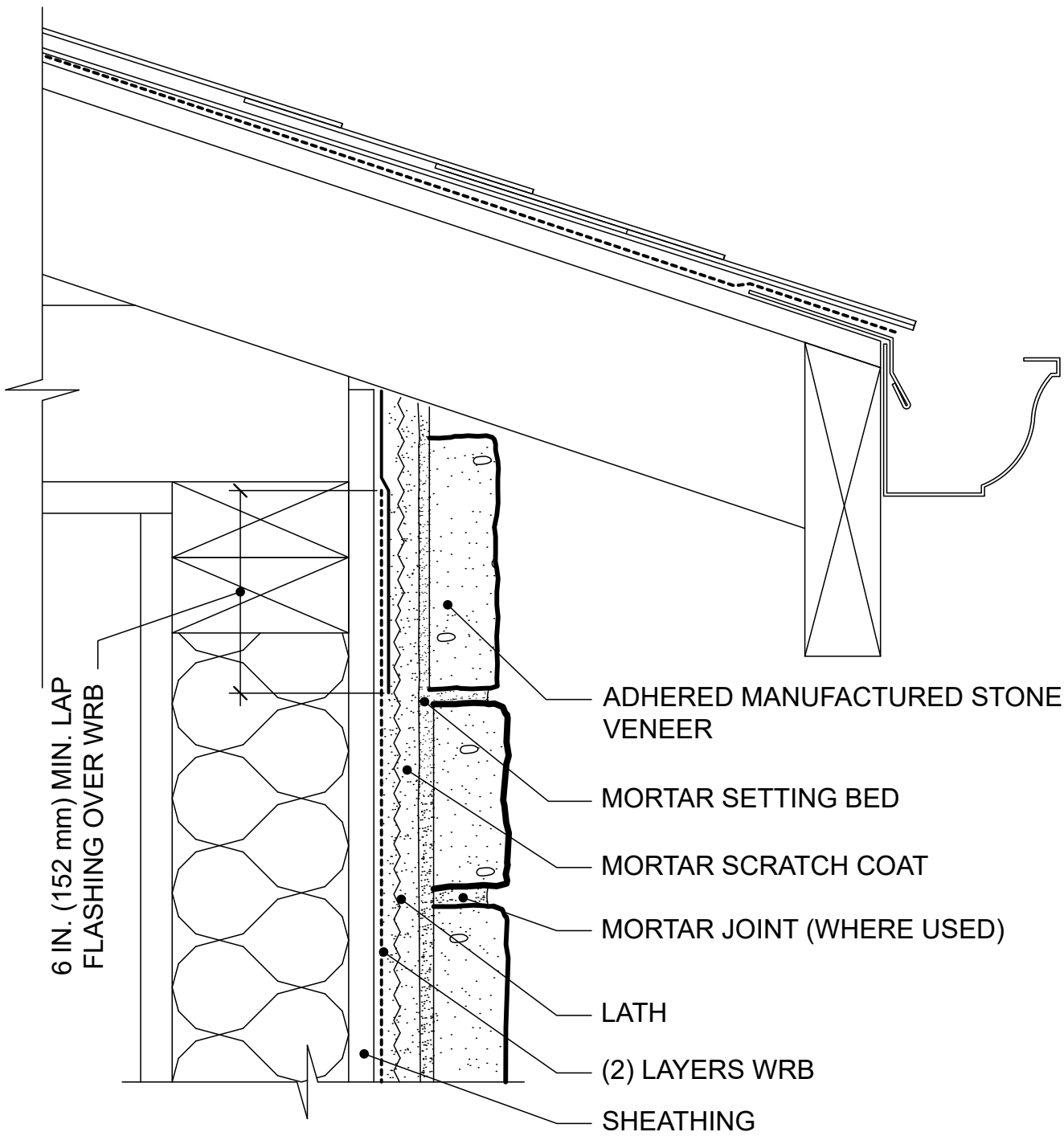


Water resistive barrier should be in place prior to soffit installation followed by adhered manufactured stone veneer.

# Figure 13b. Open Eave - Overhang Over Continuous Insulation

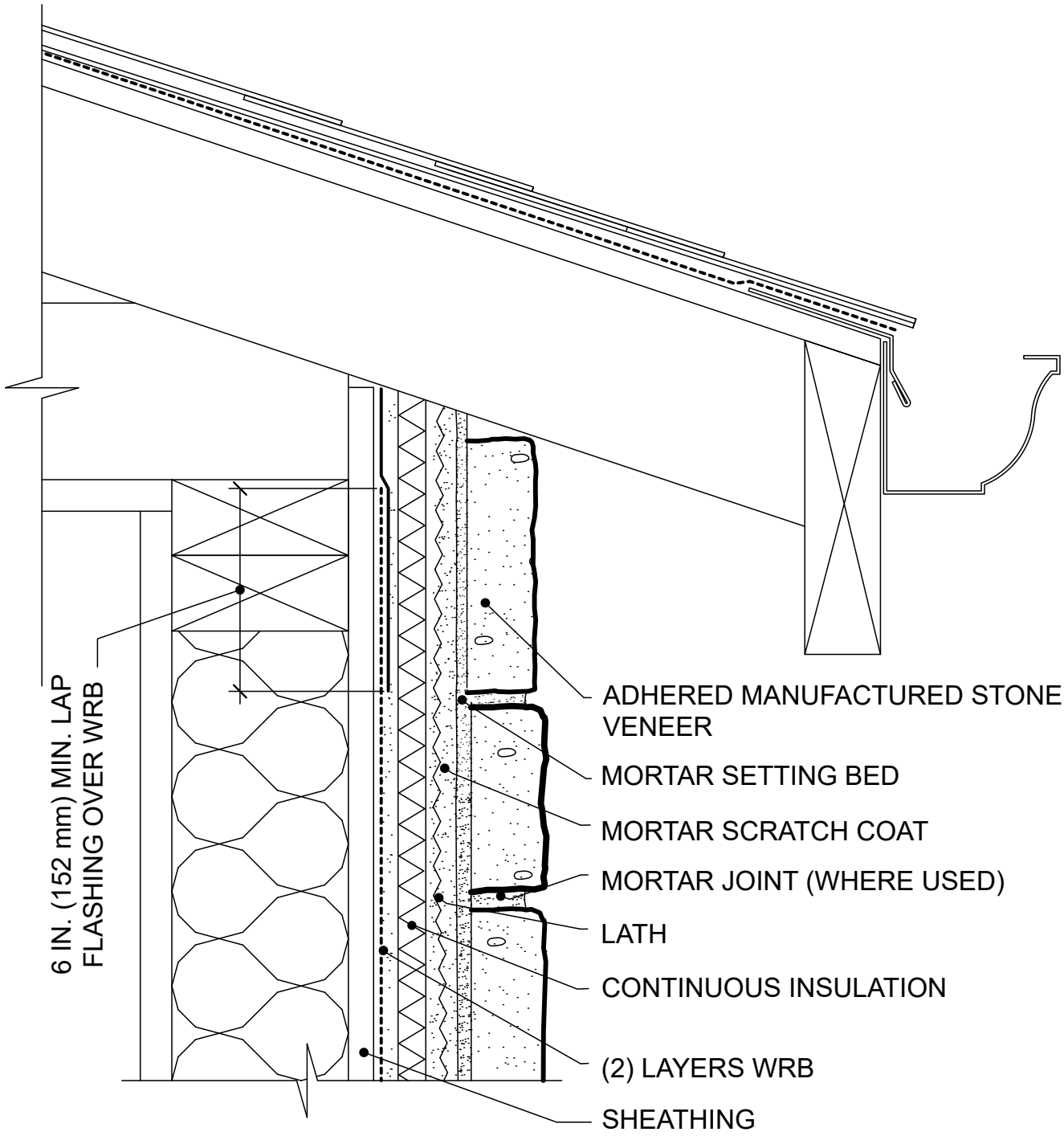


Water resistive barrier should be in place prior to soffit installation followed by adhered manufactured stone veneer.

# Figure 14. Open Eave - Flush

NOTE:FOR CONTINUOUS INSULATION APPLICATIONS, REFER TO FIGURE 13b.

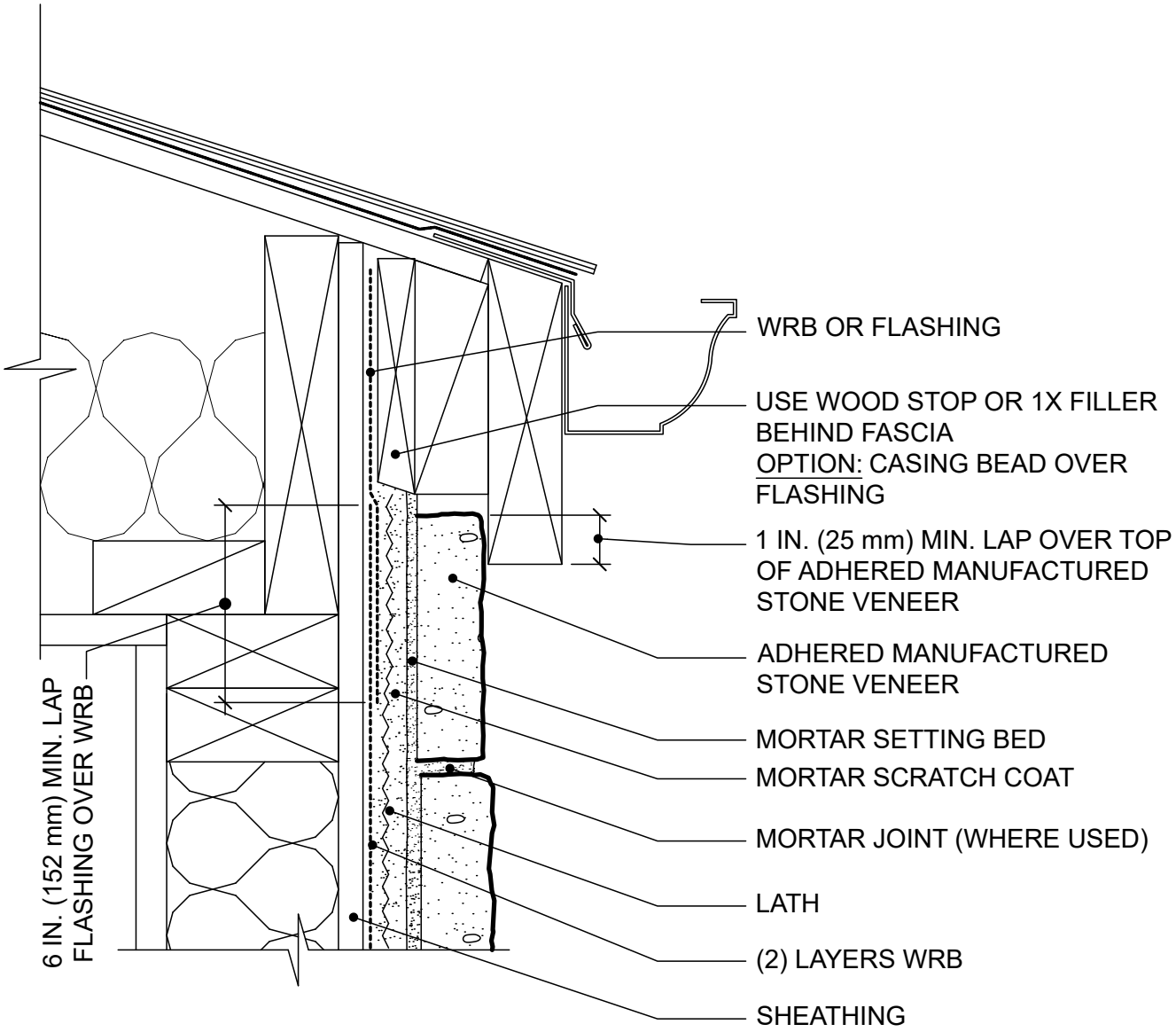


Water resistive barrier should be in place prior to soffit installation followed by adhered manufactured stone veneer.

# Figure 15. Rake - Overhang

NOTE:FOR CONTINUOUS INSULATION APPLICATIONS, REFER TO FIGURE 13b.

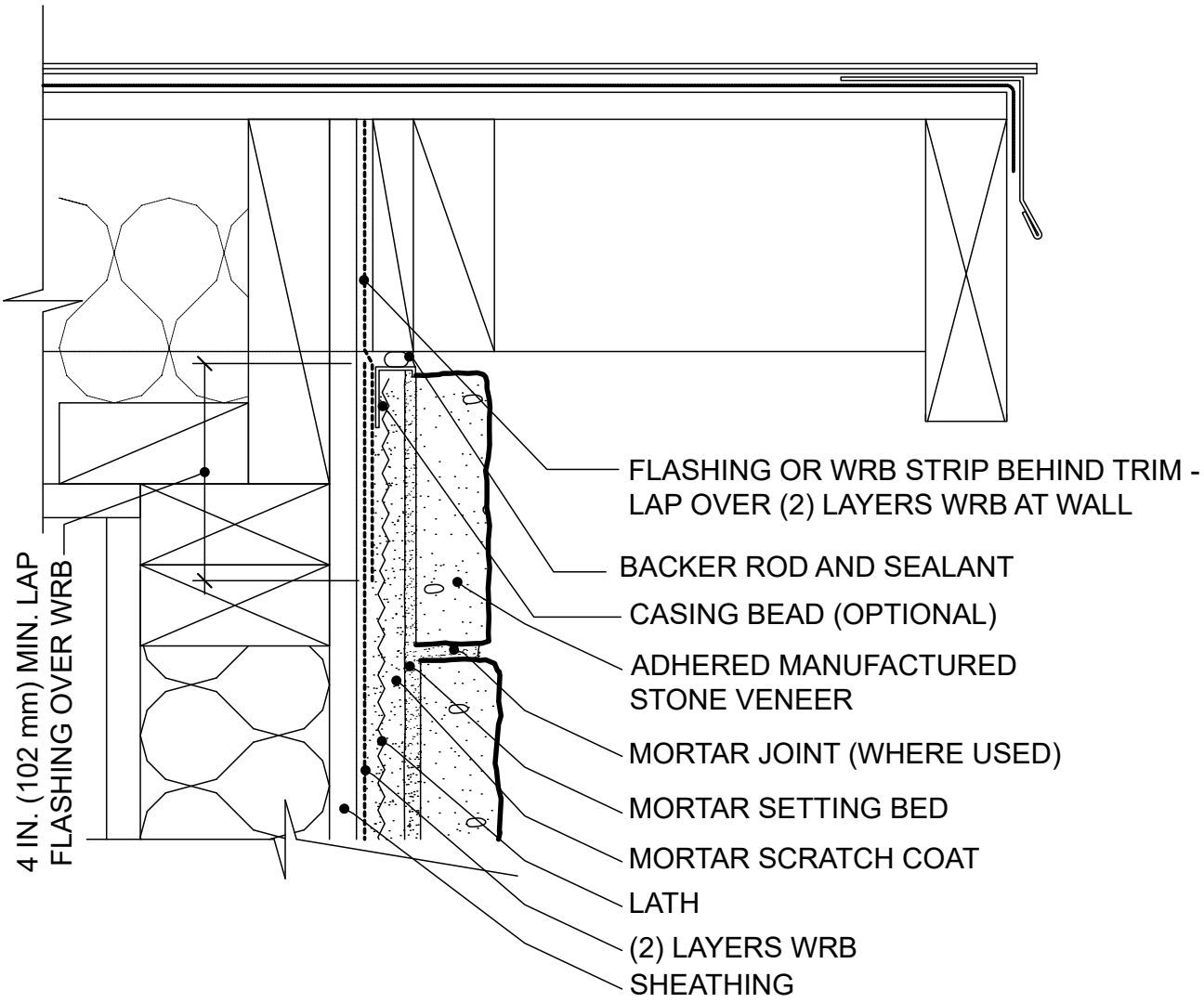

# Figure 16. Rake - Flush

NOTE:FOR CONTINUOUS INSULATION APPLICATIONS, REFER TO FIGURE 13b.

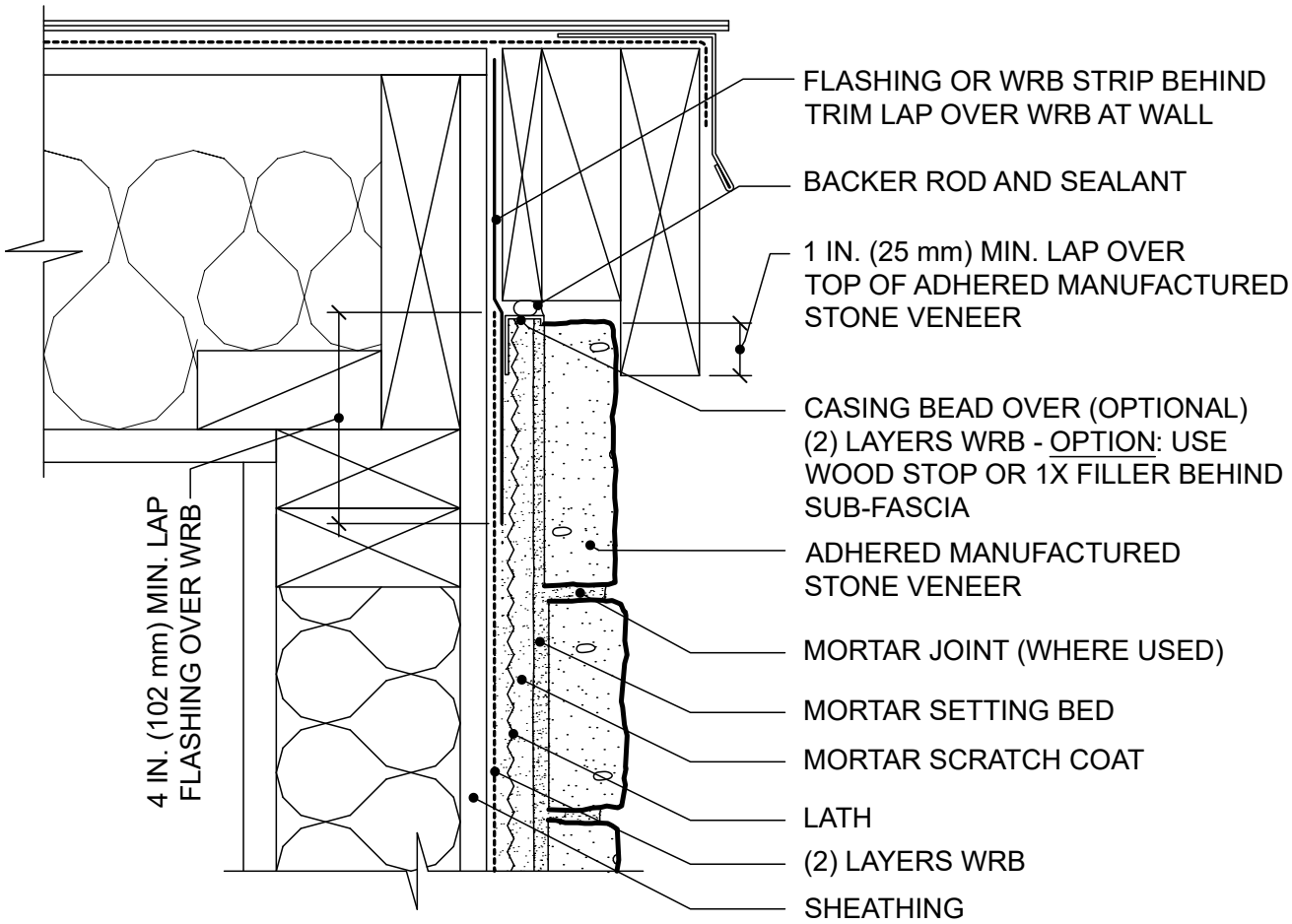

# Figure 17a. Side Wall – Composition Shingles

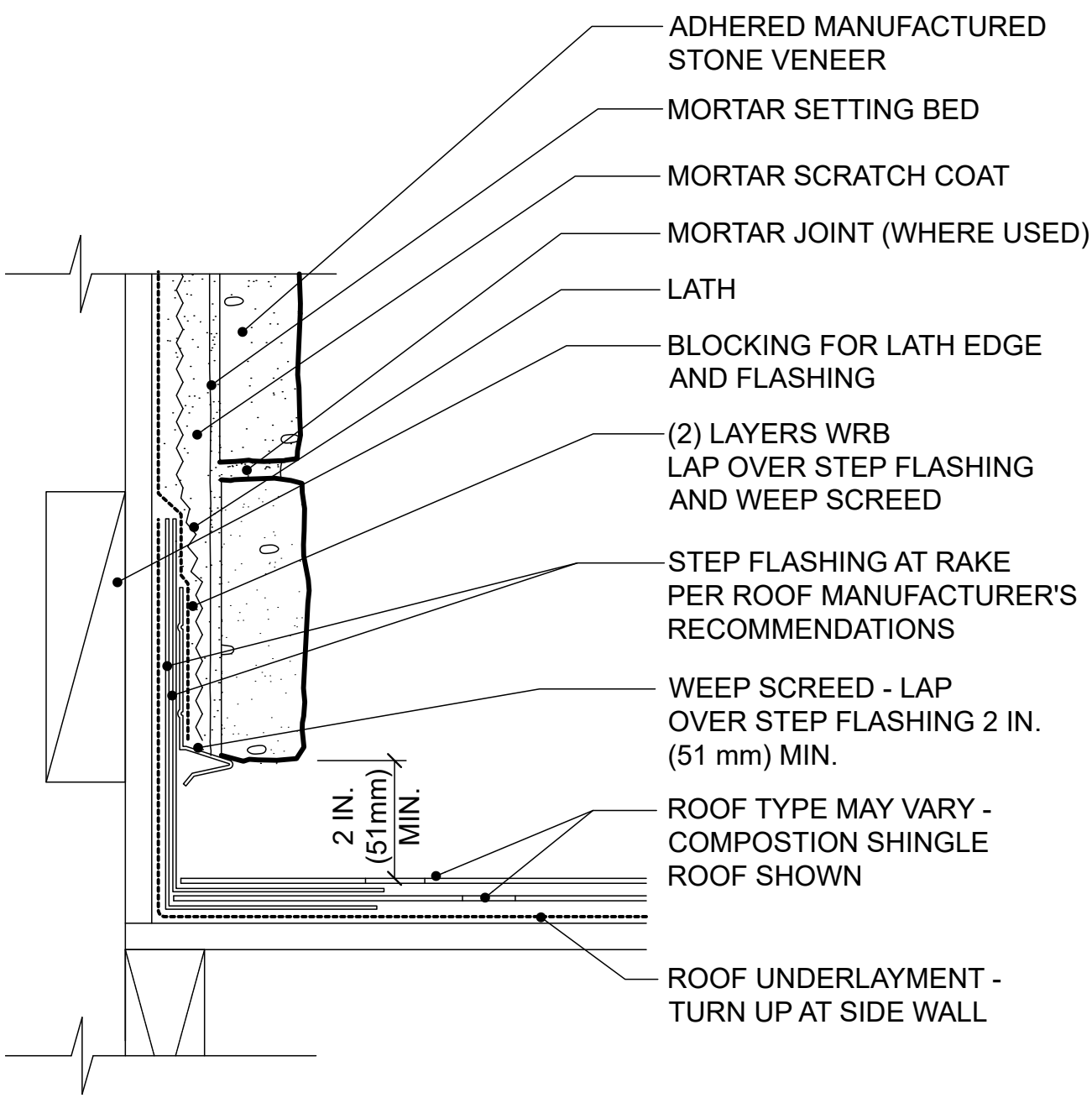

# Figure 17b. Side Wall – Composition Shingles Over Continuous Insulation

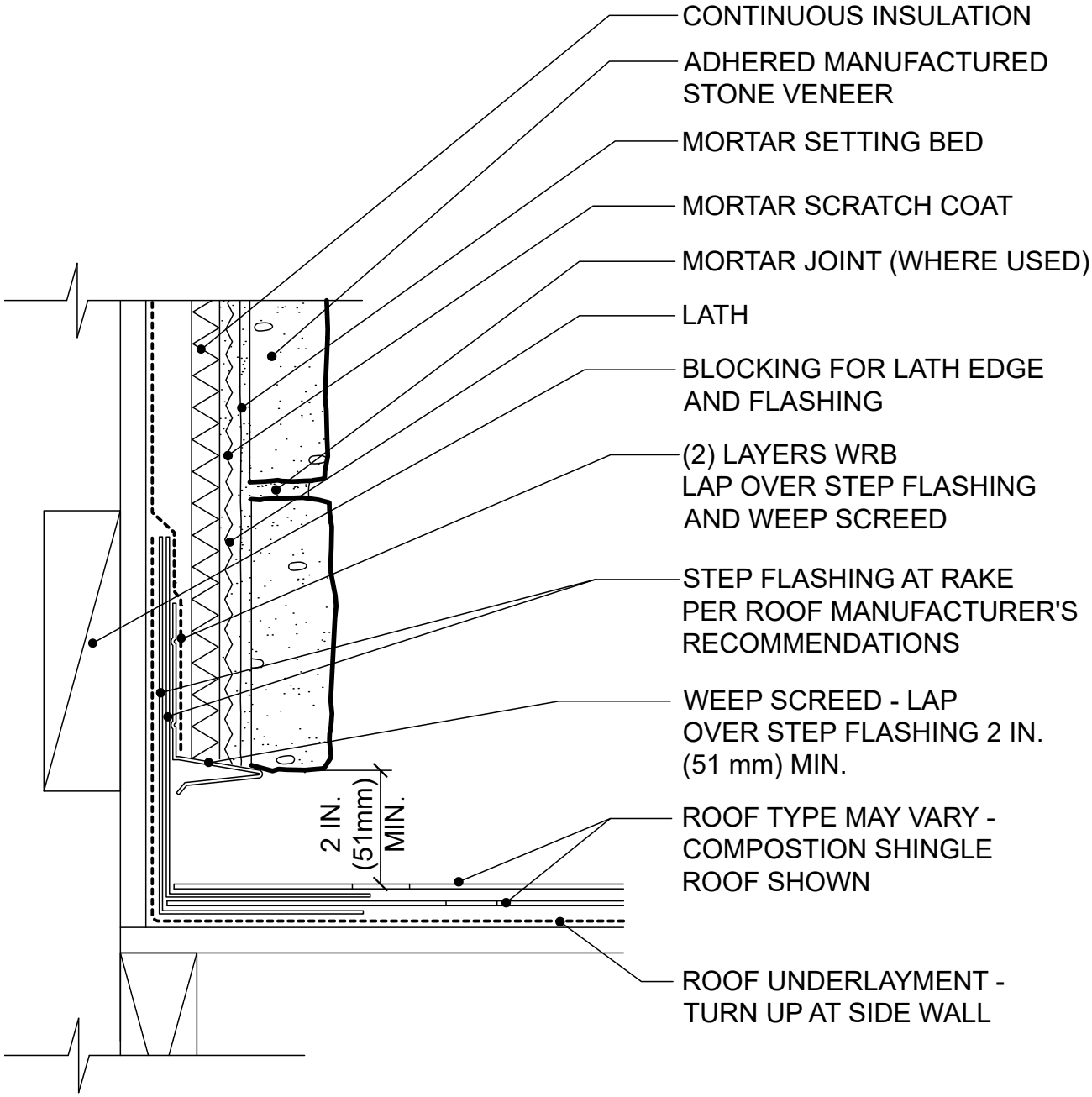

# Figure 18. Side Wall – Composition Shingles Curbing

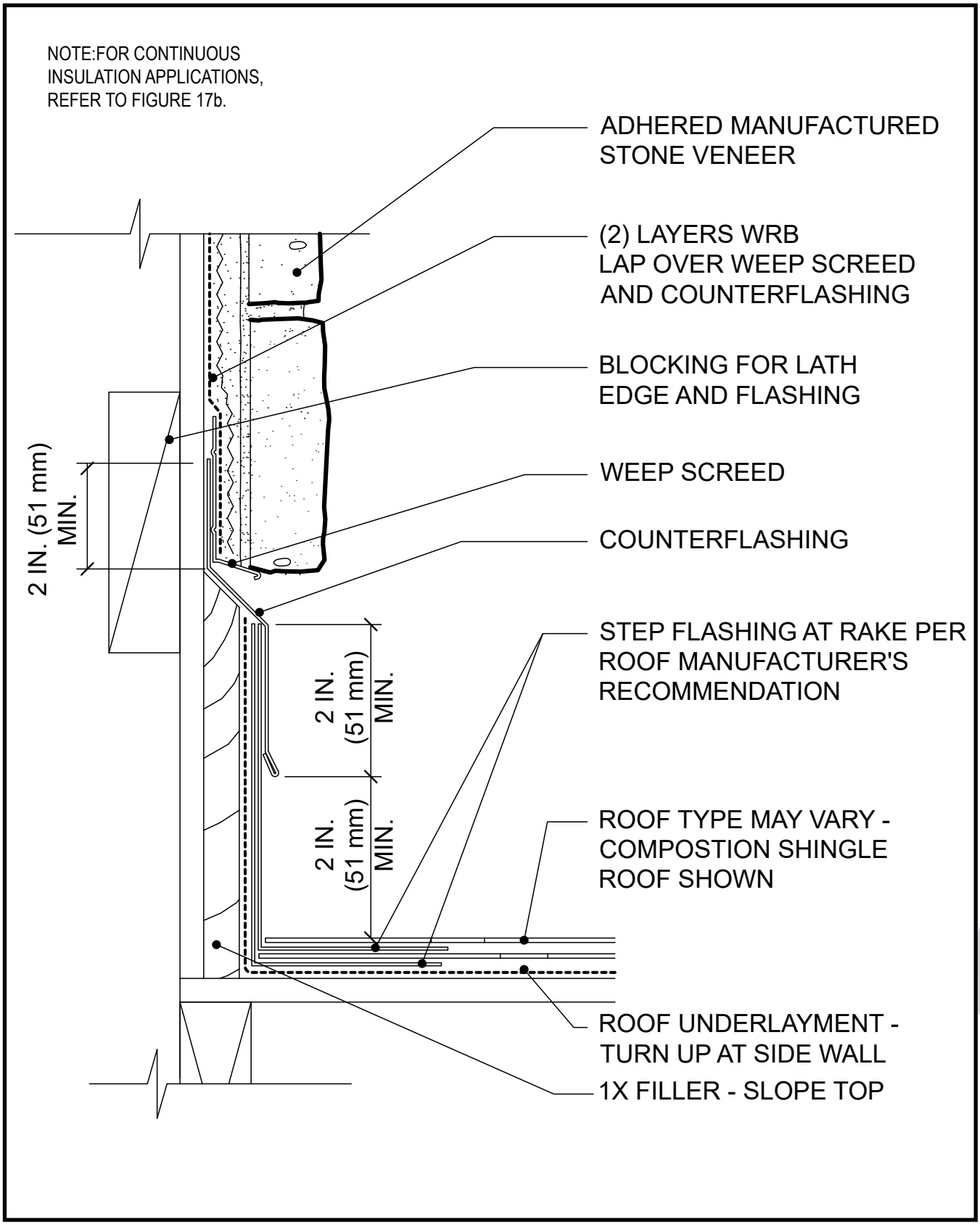

# Figure 19. Side Wall – Tile Roofing

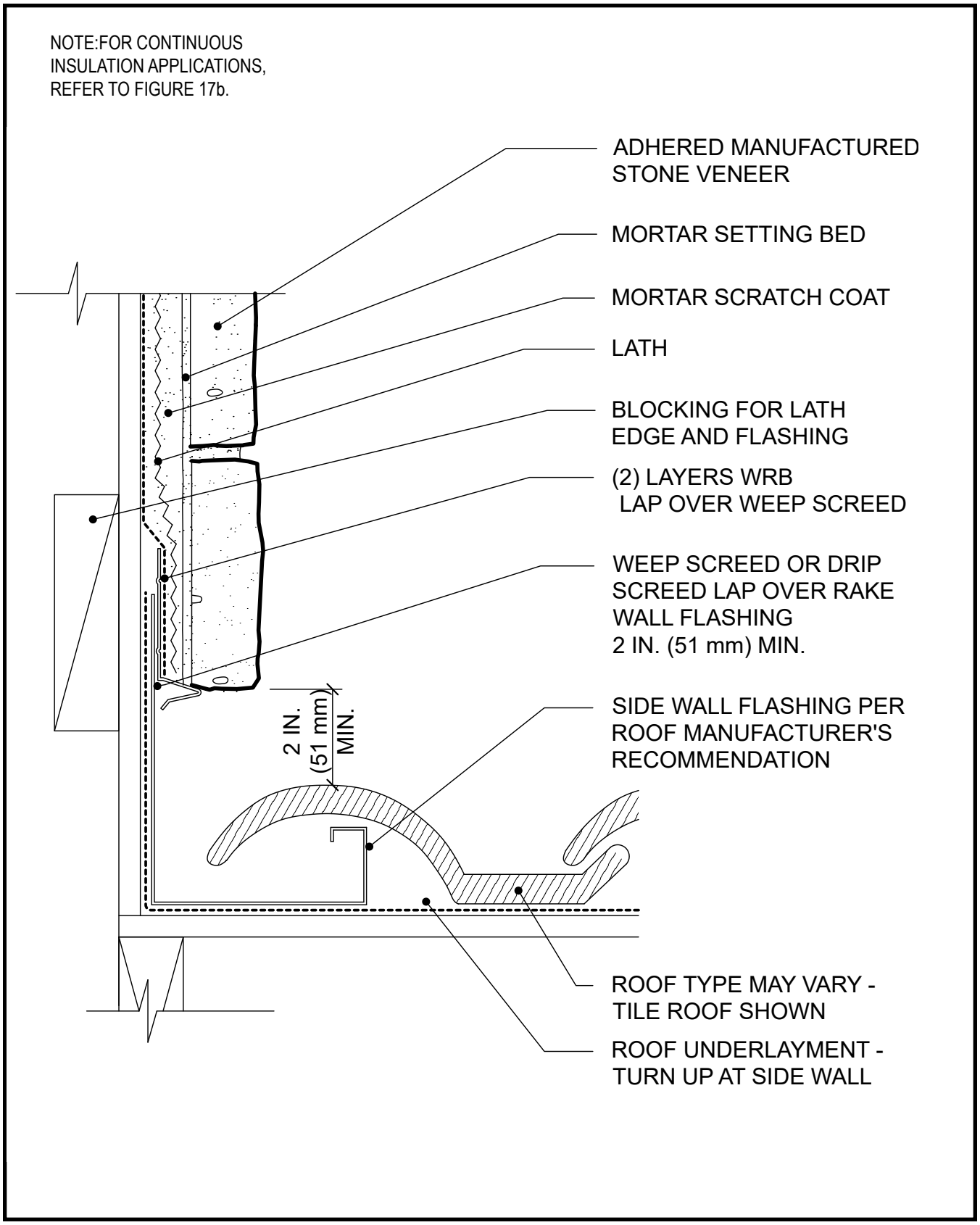

# Figure 20. Side Wall – Tile Roofing Curbing

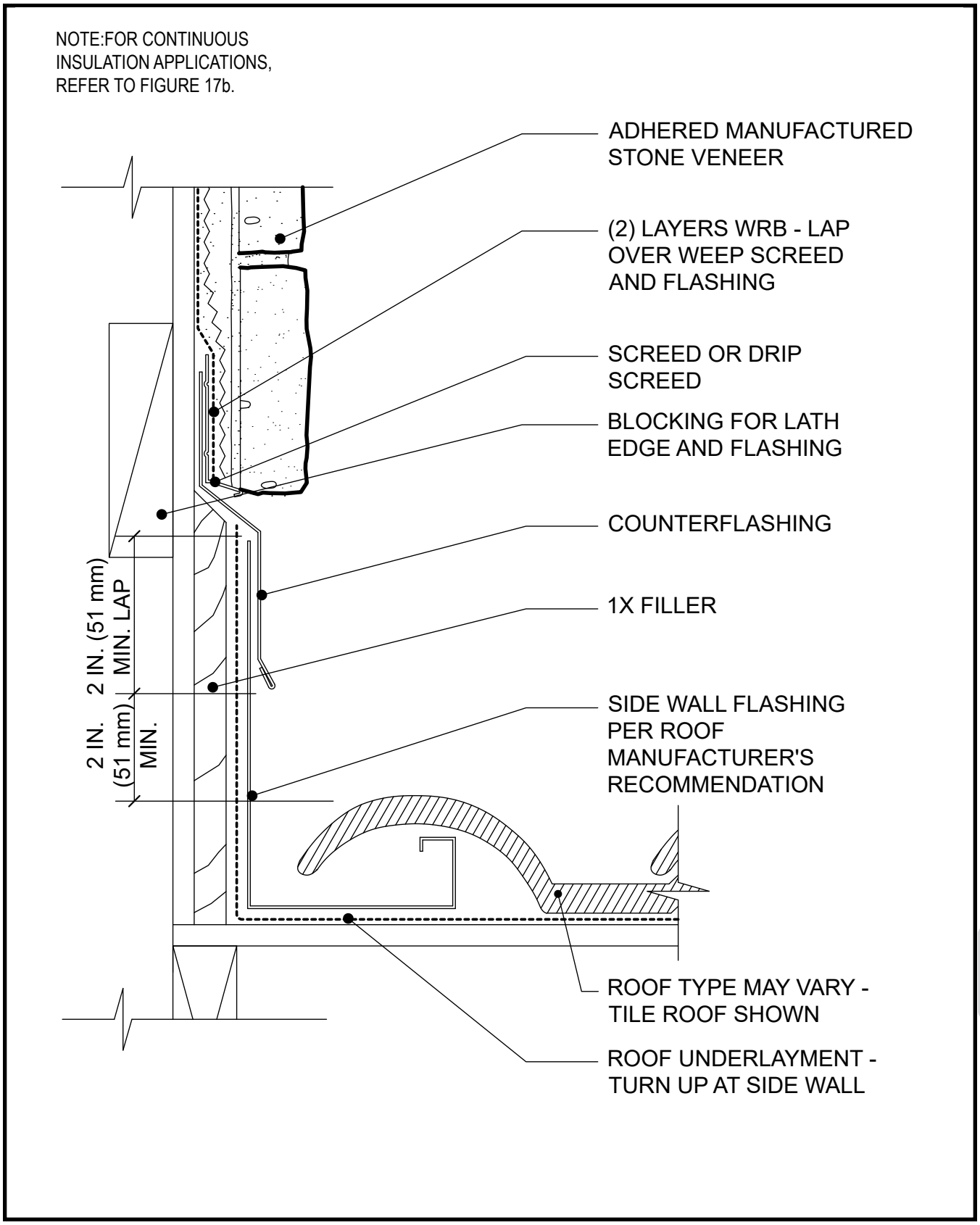

# Figure 21a. Window Sill

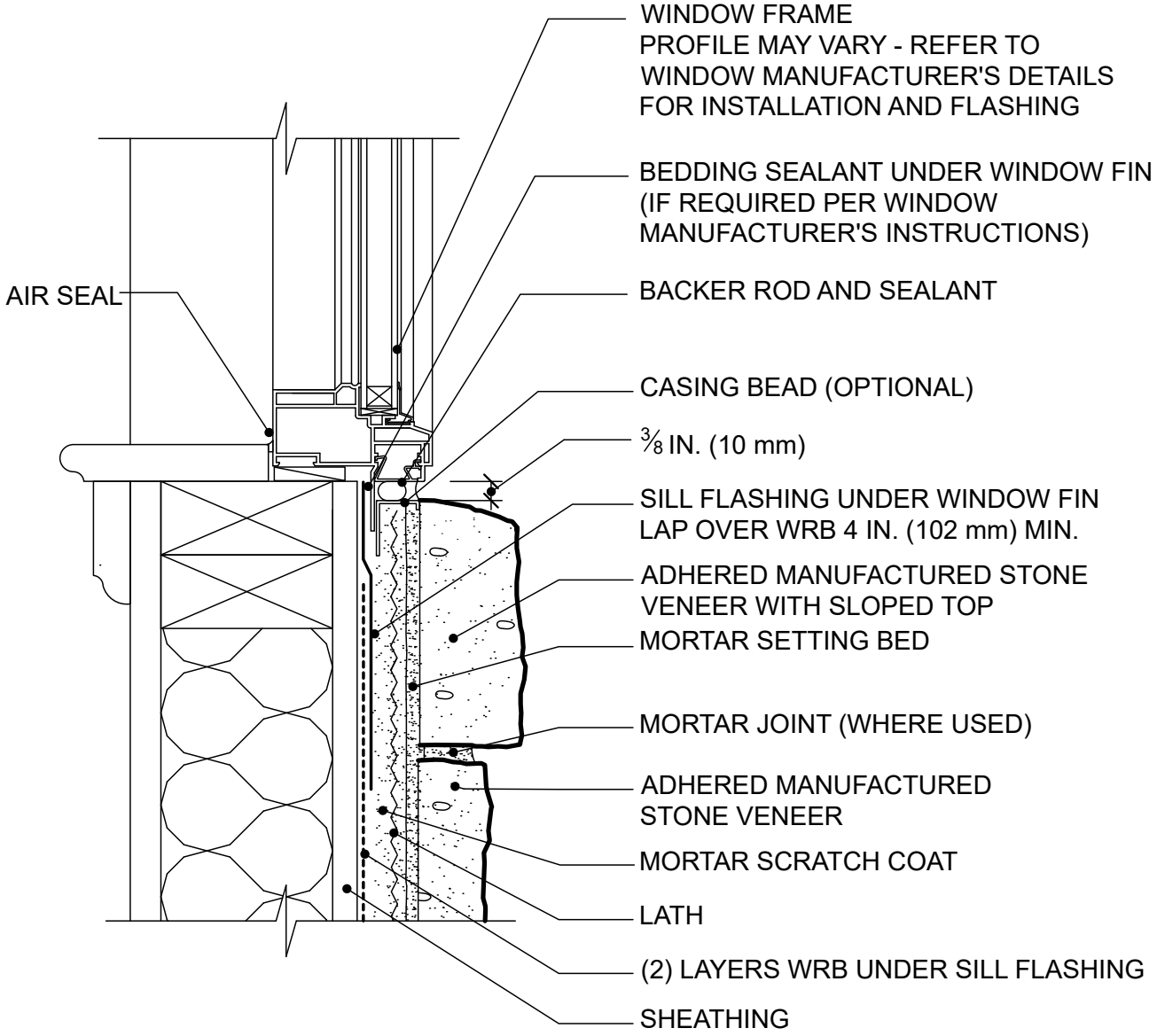


Rough openings must be properly flashed prior to window installation. Tuck water resistive barrier under flashing at sill. Sill flashing should drain to the exterior of the primary WRB or to exterior of adhered manufactured stone veneer.

# Figure 21b. Window Sill Over Continuous Insulation

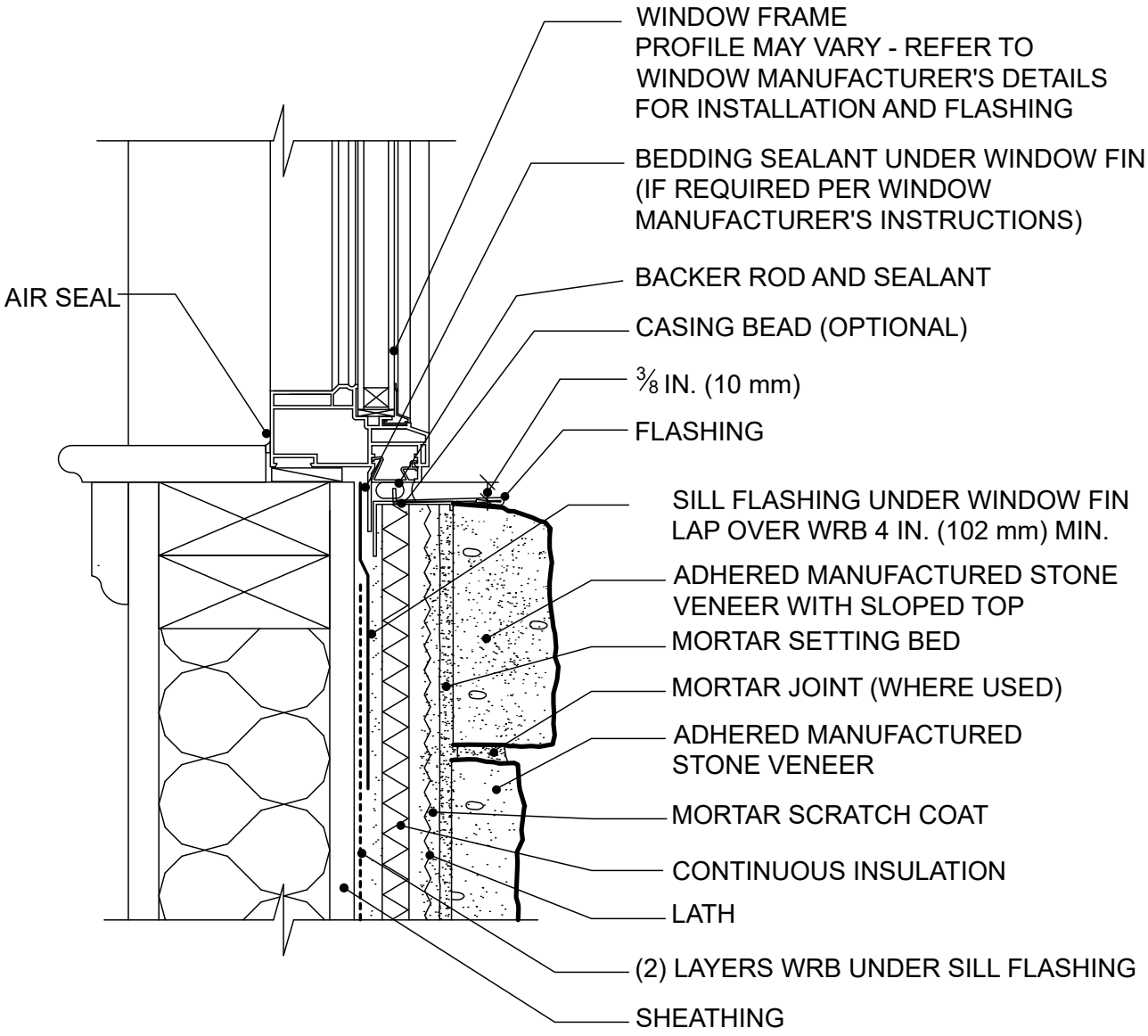


Rough openings must be properly flashed prior to window installation. Tuck water resistive barrier under flashing at sill. Sill flashing should drain to the exterior of the primary WRB or to exterior of adhered manufactured stone veneer.

# Figure 22. Window Jamb

NOTE:FOR CONTINUOUS INSULATION APPLICATIONS, REFER TO FIGURE 21b.

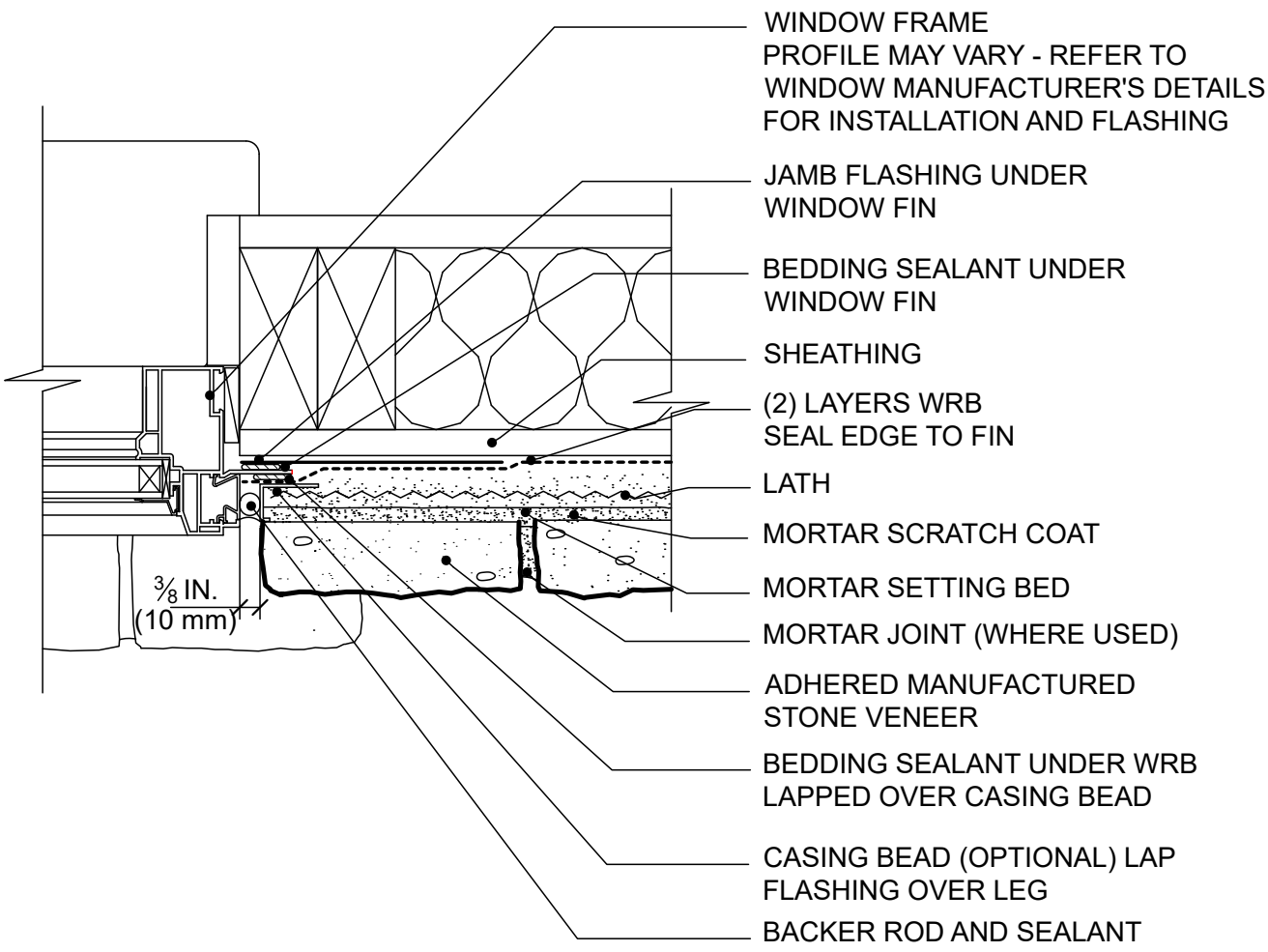


Rough openings must be properly flashed prior to window installation. Backer rod and sealant between the window frame and the adhered manufactured stone veneer allows for movement between the dissimilar materials.

# Figure 23. Window Head

NOTE:FOR CONTINUOUS INSULATION APPLICATIONS, REFER TO FIGURE 21b.

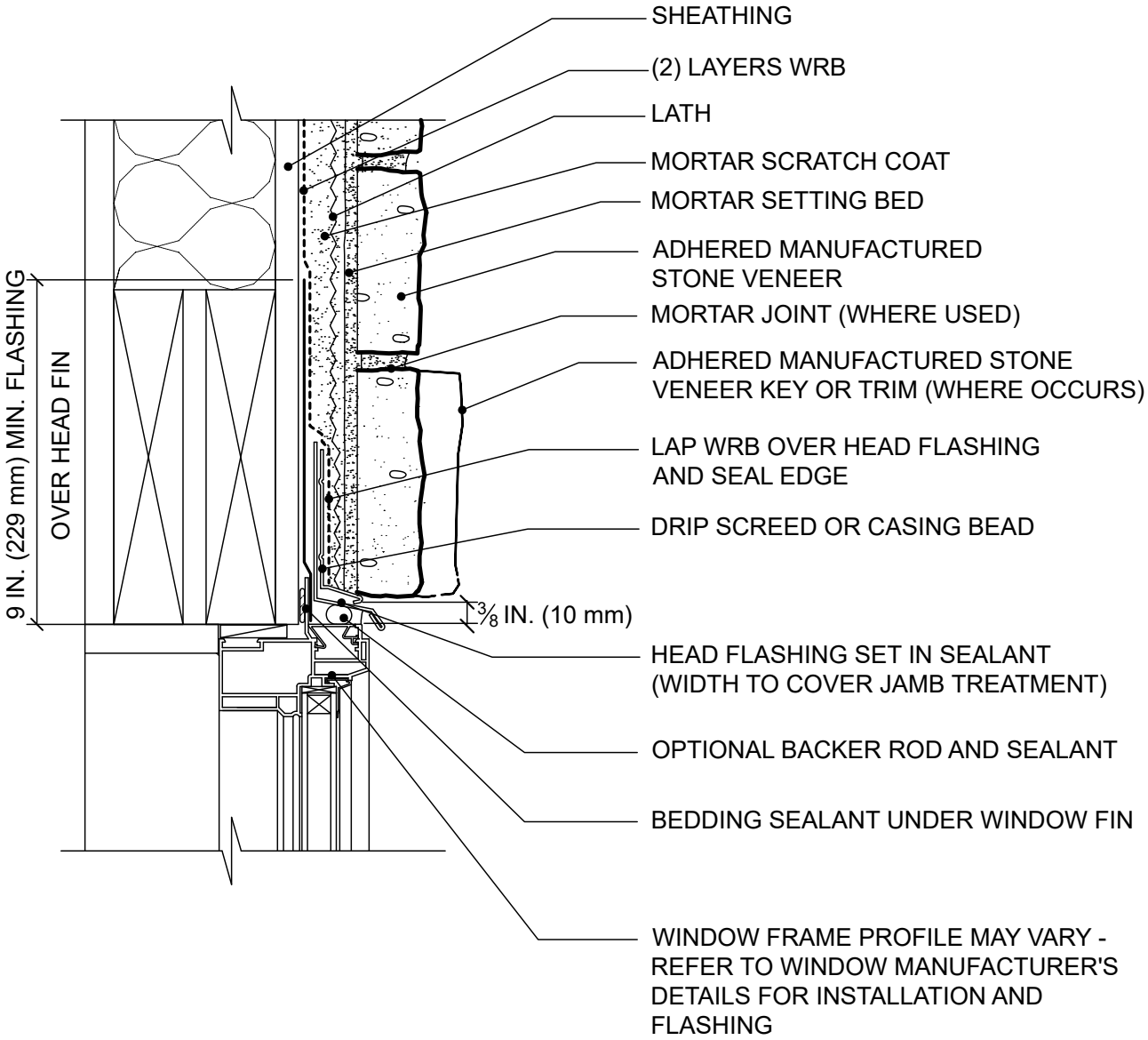


Flashing and WRB installed shingle fashion may be complimented with self-adhered flashing (SAF) to seal WRB to window frame.

# Figure 24. Kick-Out Flashing

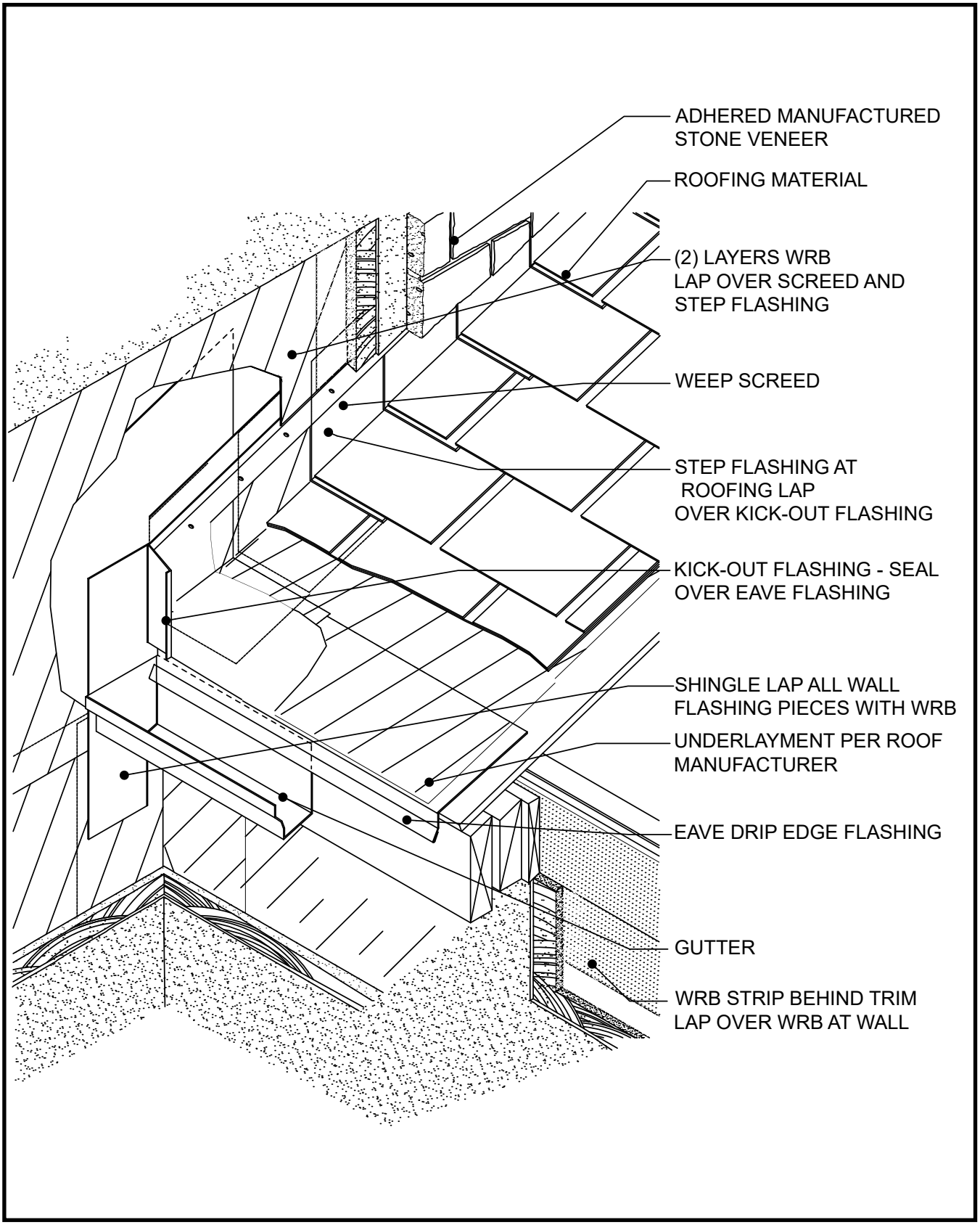

# Figure 25. Cricket

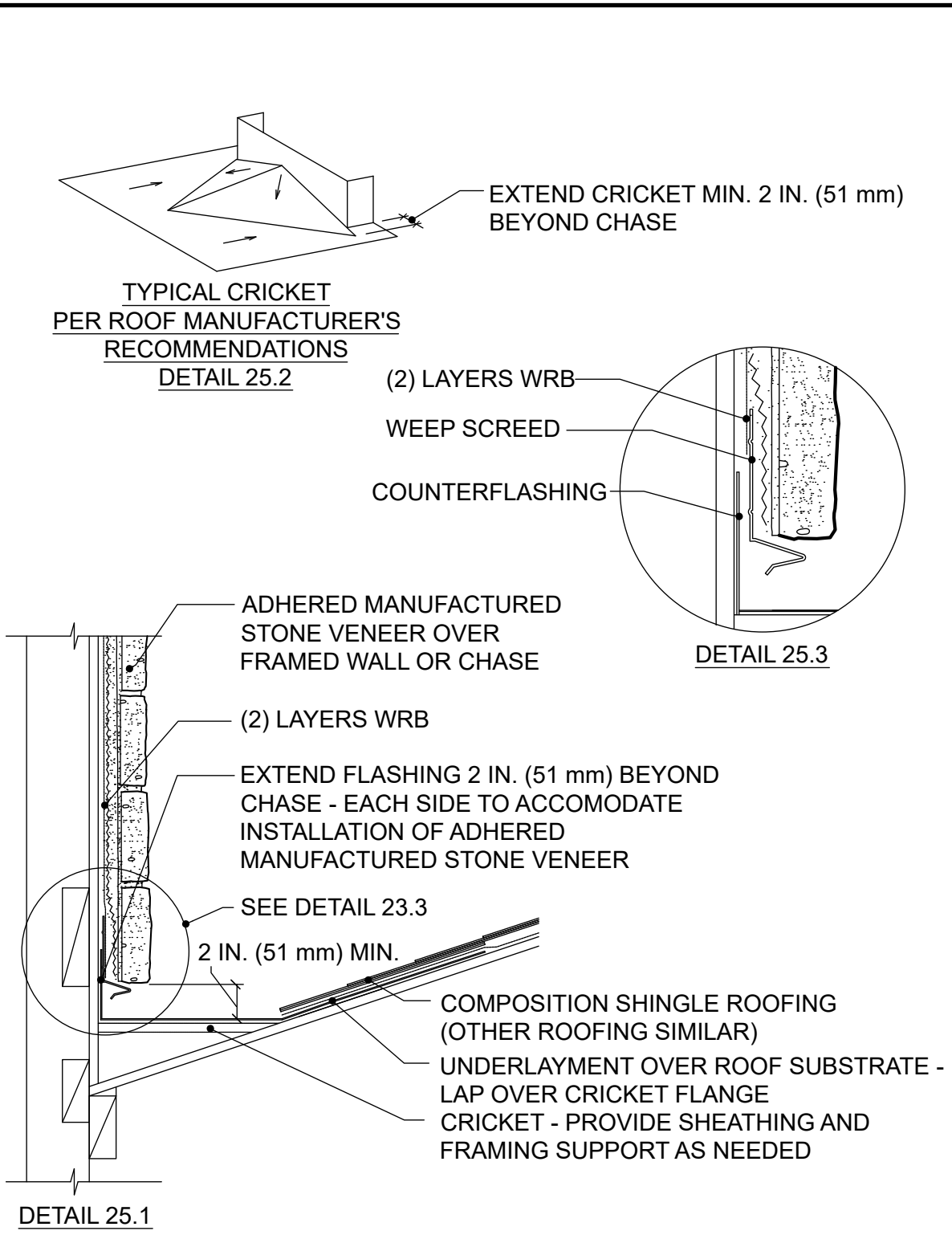

# Figure 26. Chimney Chase

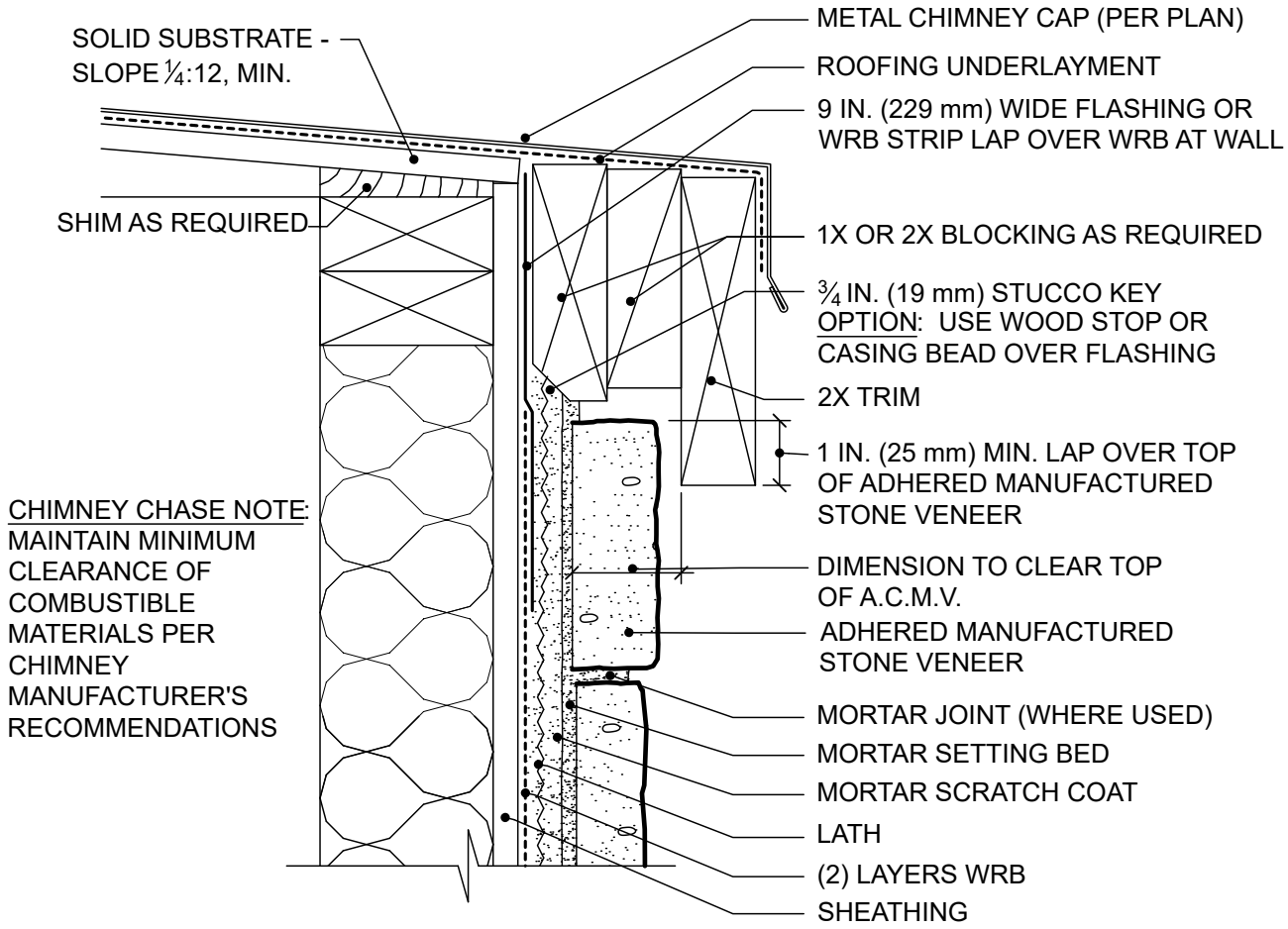

# Figure 27. Column Base

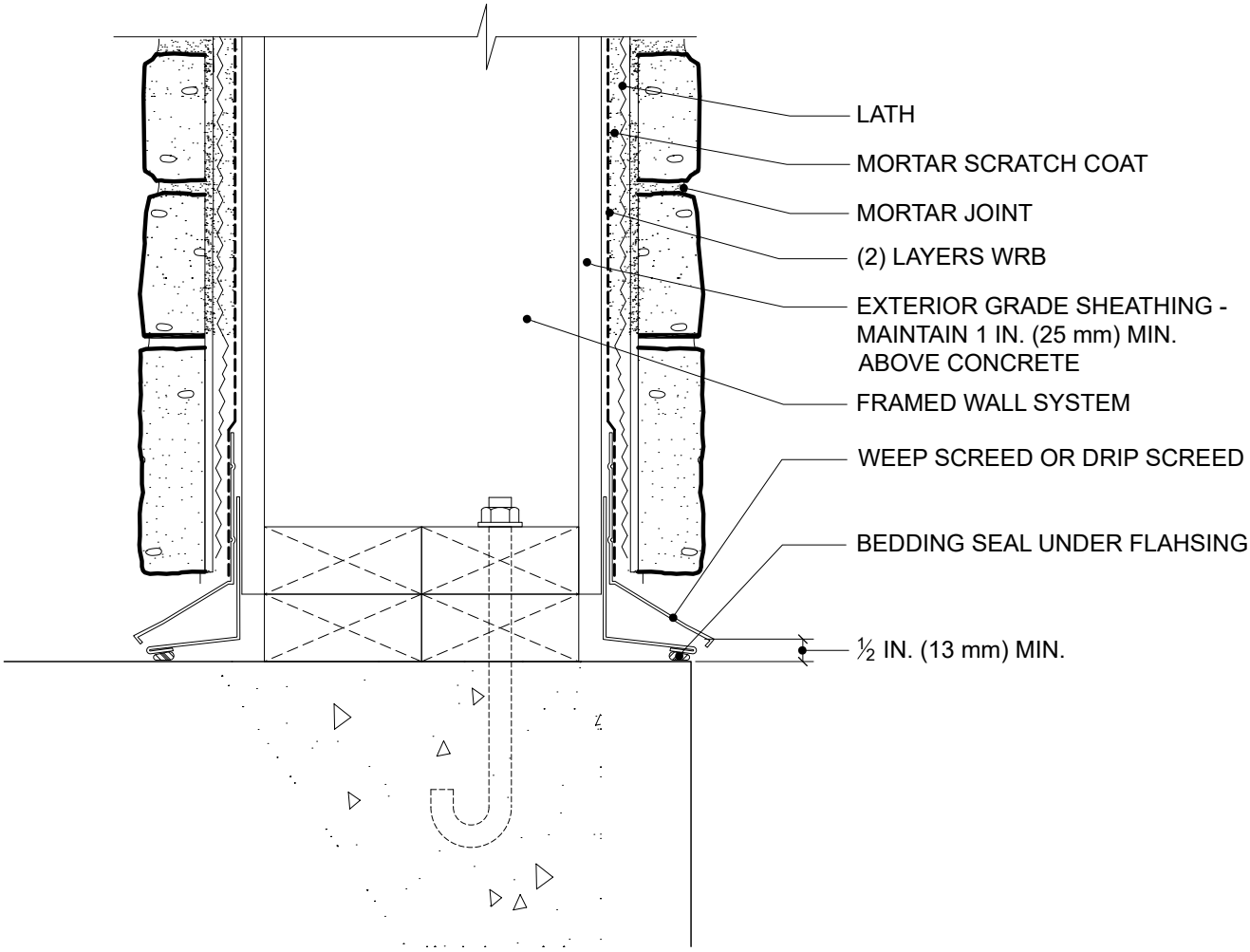


A minimum one half inch (13 mm) clearance should be maintained at all sides of the base. All column materials to be exterior grade. Do not extend flashing past edge of AMSV for safety reasons.

# Figure 28. Penetration, Flanged

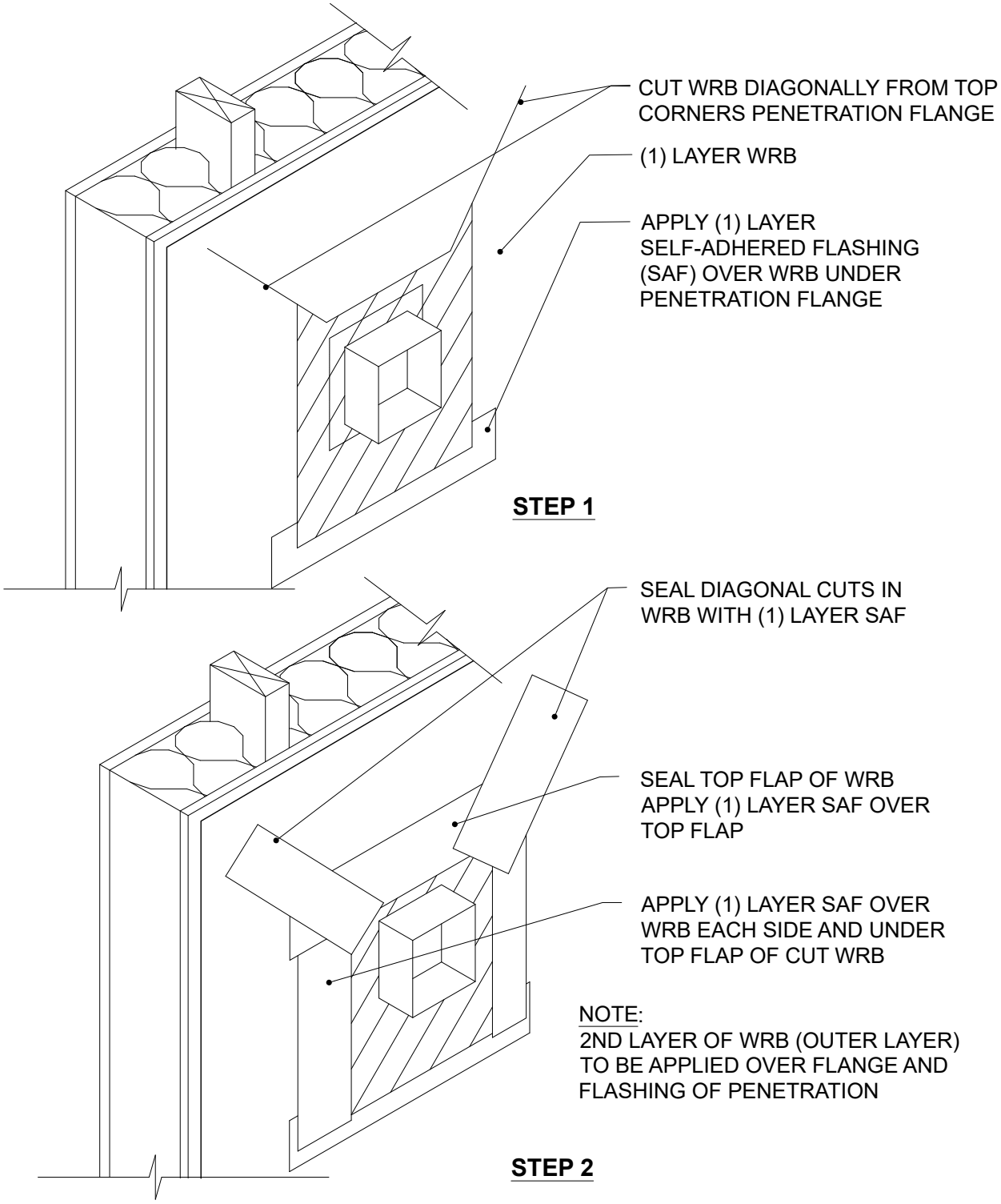


Penetration with flanges can be incorporated into the wall system by applying WRB in a watershed fashion and sealing cuts in the WRB with self-adhered flashing. Drawing illustrates installation with housewrap WRB. Installation with building paper WRB would be similar but instead of 45 degree cuts, fit last piece of WRB on top of flanges and tuck under WRB course above penetration.

# Figure 29. Penetration Non-Flanged, with Building Paper WRB

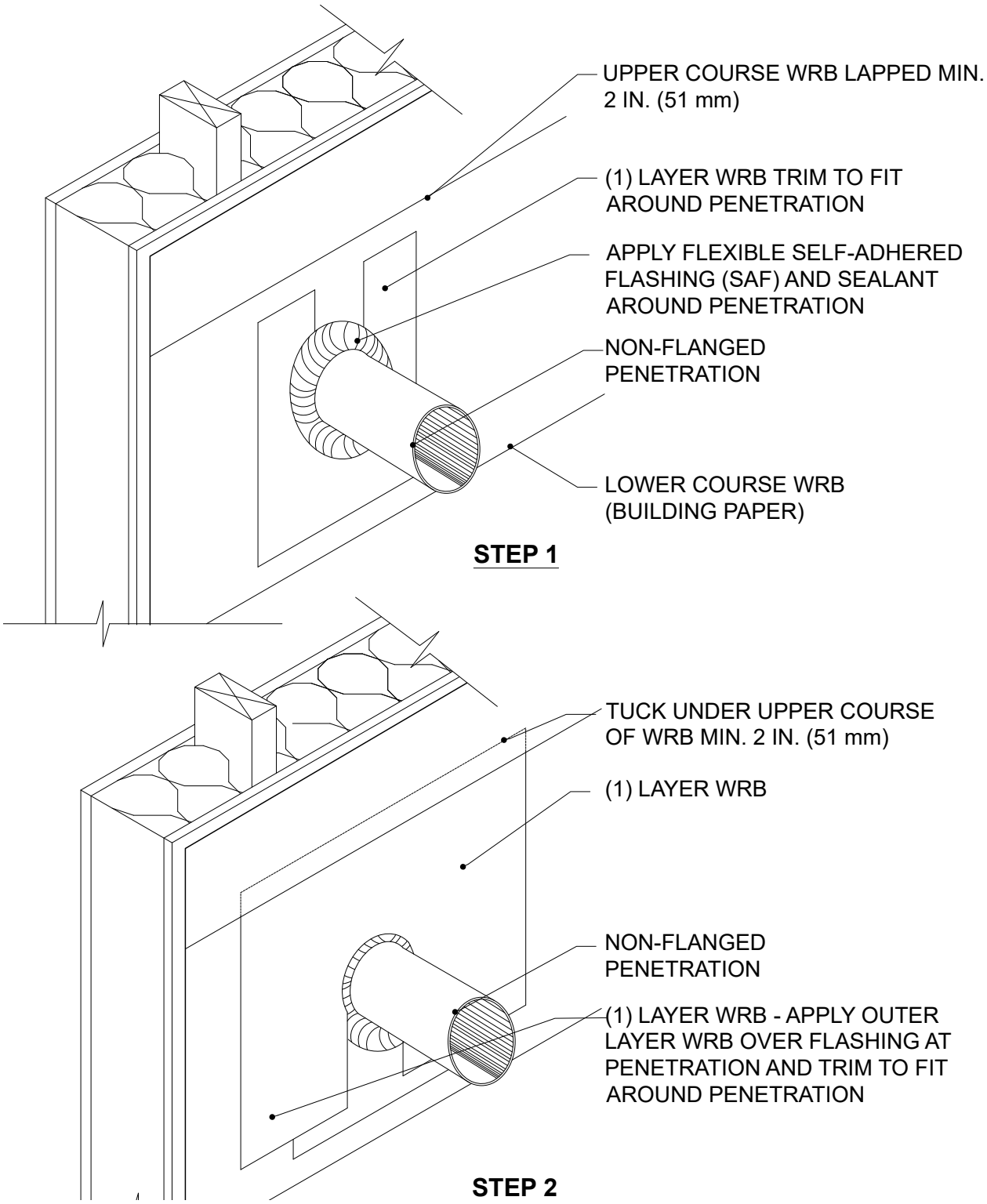

# Figure 30. Penetration Non-Flanged, with Housewrap WRB

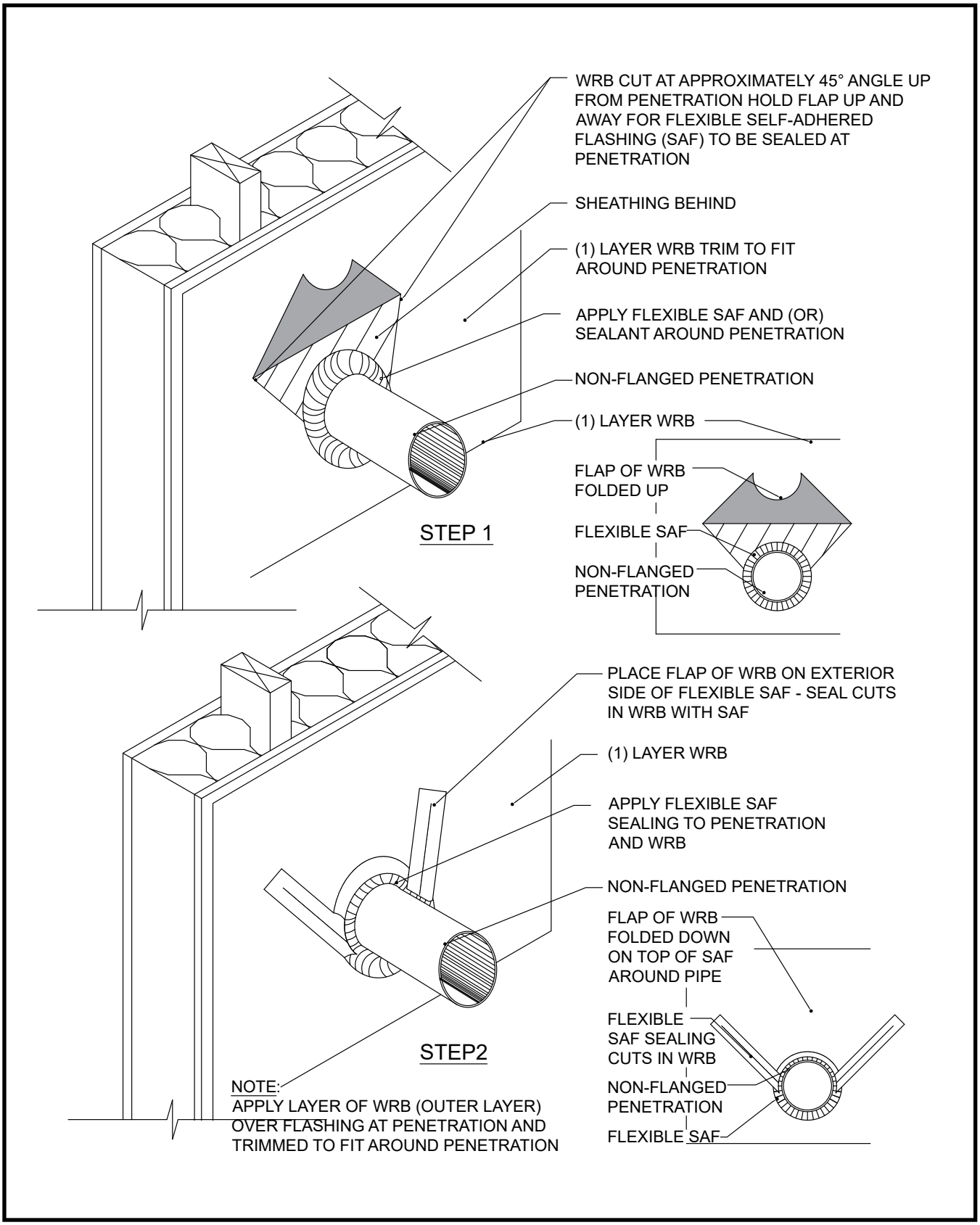

# Figure 31. Penetration, Fixture

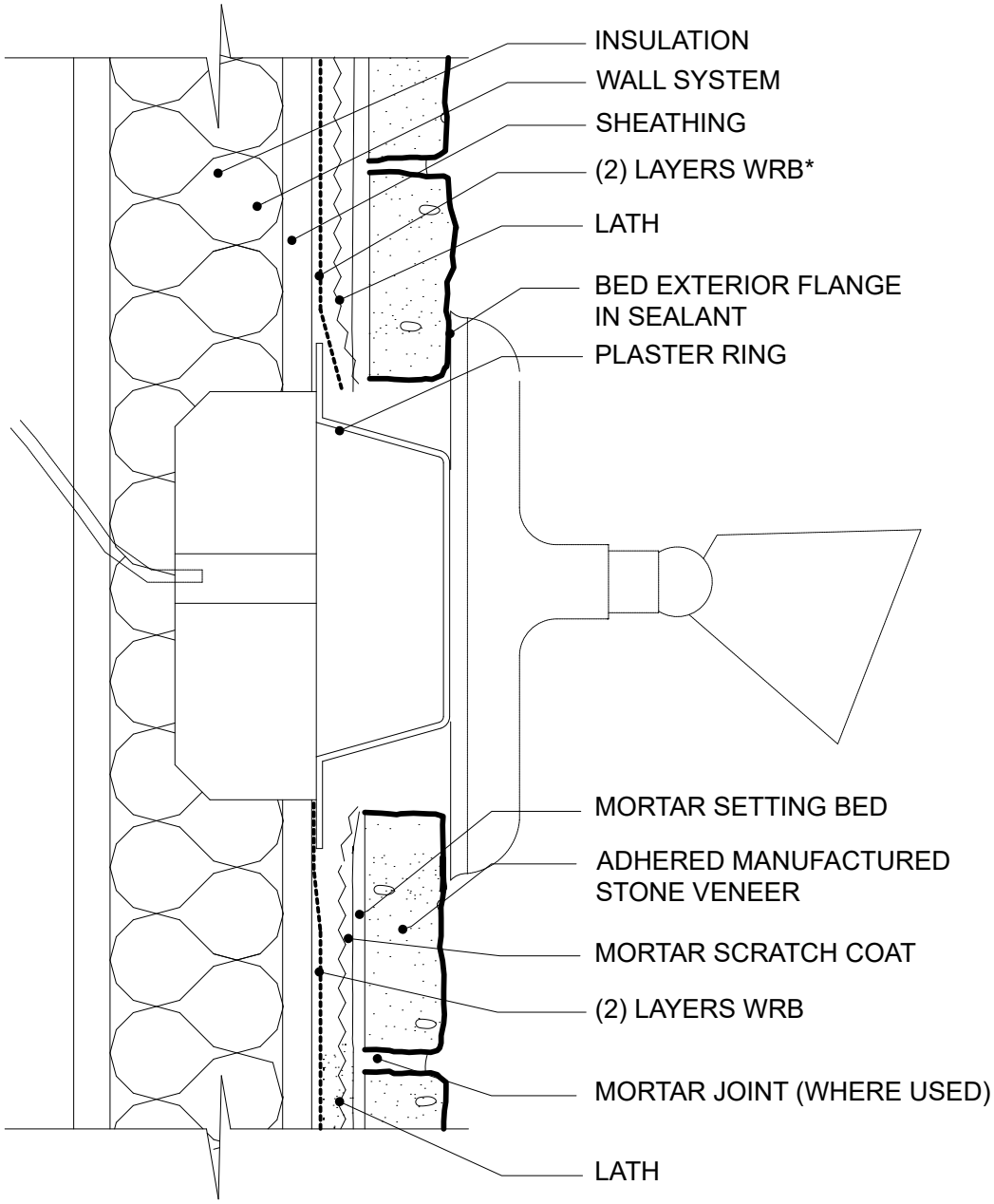


INTERIOR EXTERIOR

*SEE FIGURES 29, 30, AND 31 FOR FLASHING OPTIONS.

Plaster rings should be affixed over the service box to bring the face of the box flush with the adhered manufactured stone veneer. Bed the exterior flange in sealant. Water resistive barrier should be installed snugly around the plaster ring flange.

# Figure 32. Penetration, Dryer Vent

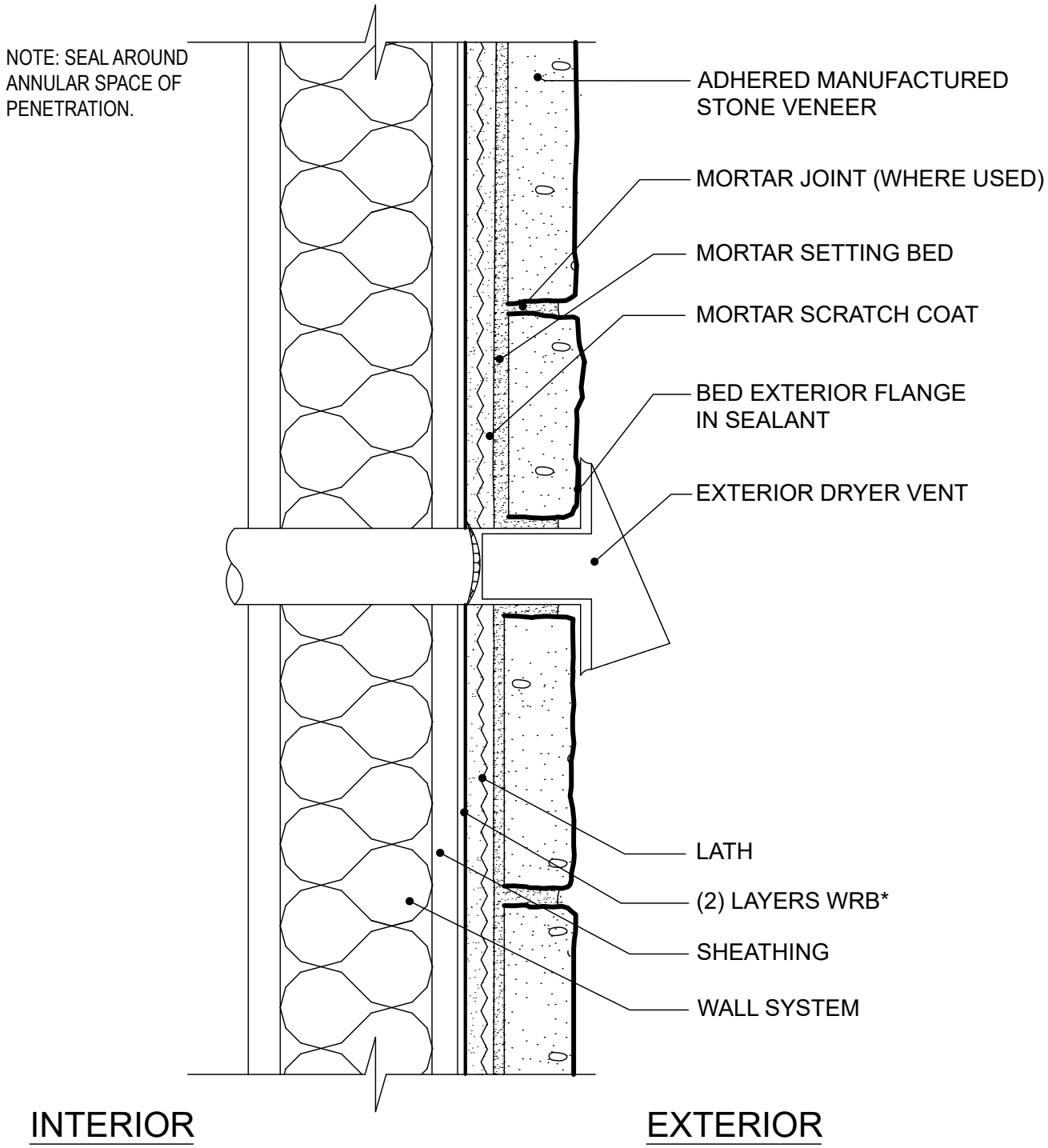


*SEE FIGURES 29, 30, AND 31 FOR FLASHING OPTIONS

# Figure 33. Deck Termination

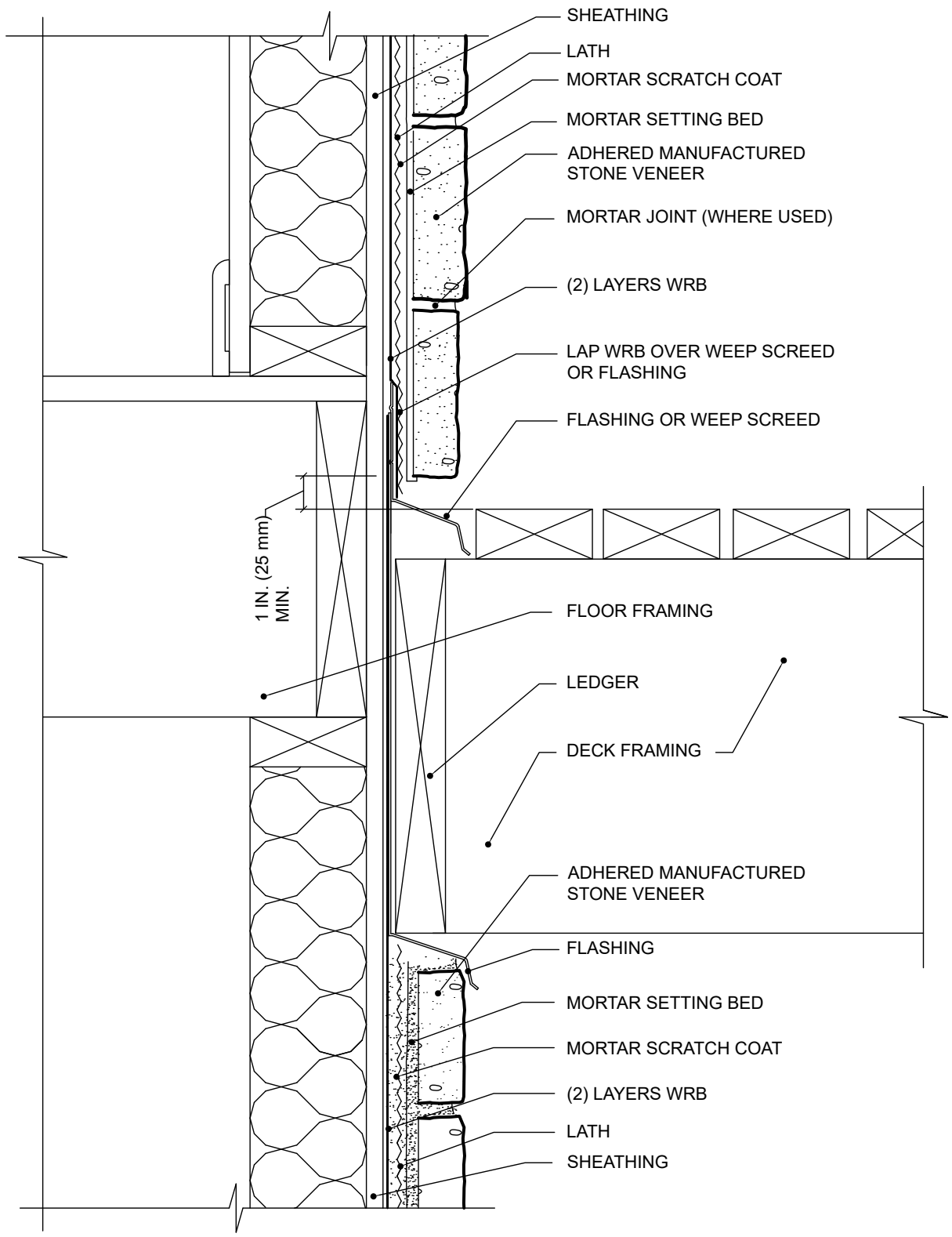

# Figure 34. Wall Cap

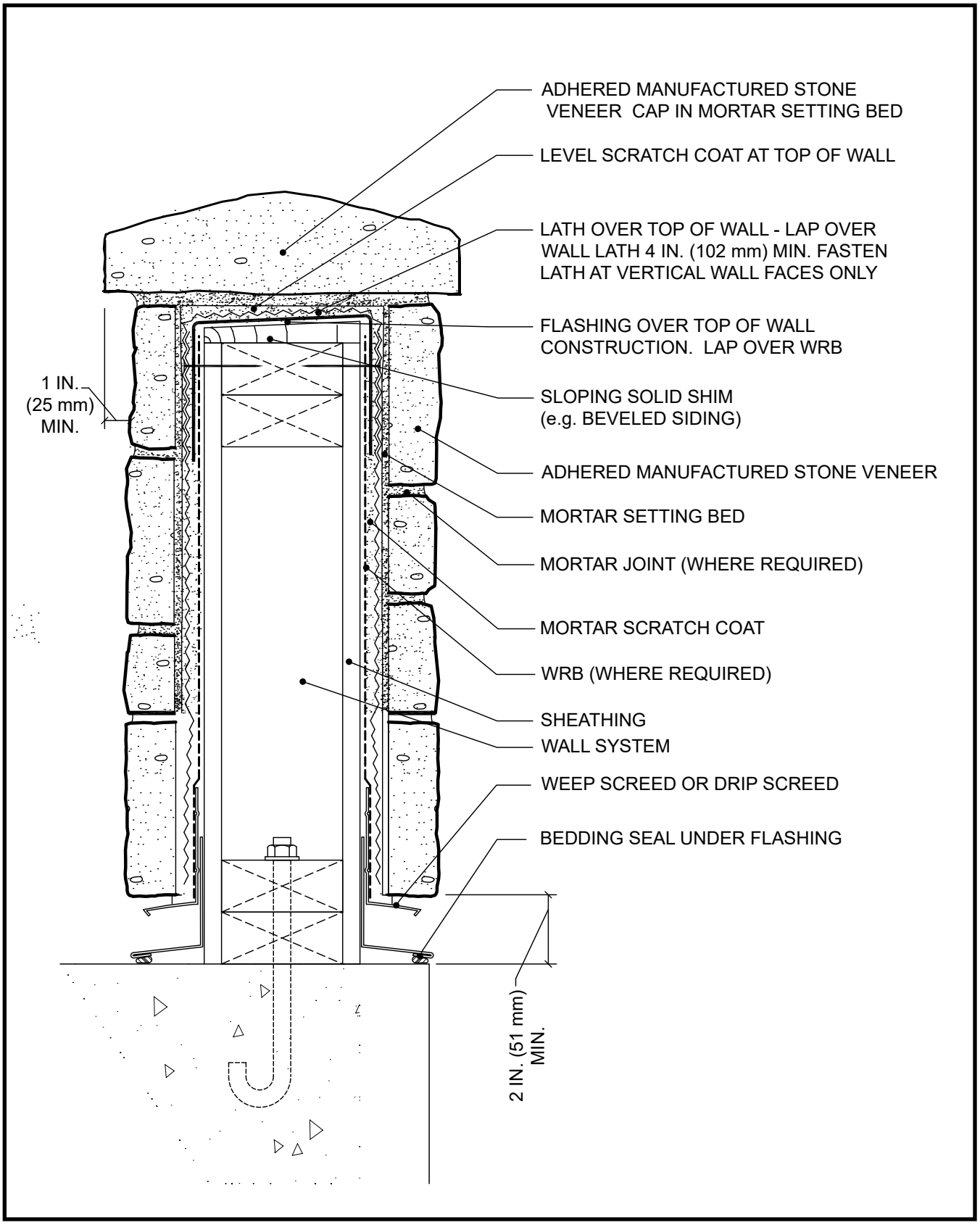

# Figure 35. Wall Assembly – Rainscreen System – Membrane System

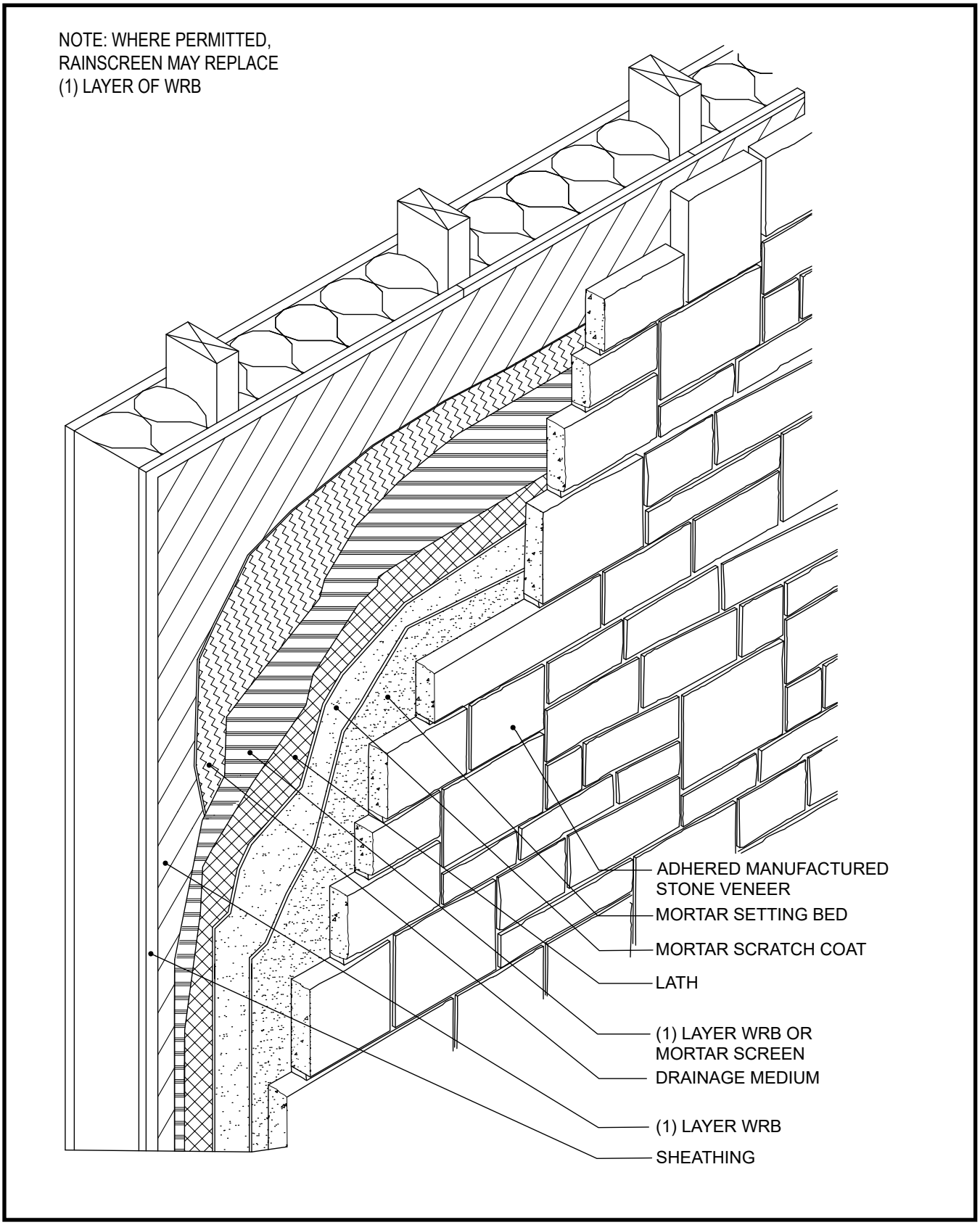

# Figure 36. Wall Assembly – Rainscreen System – Strapped

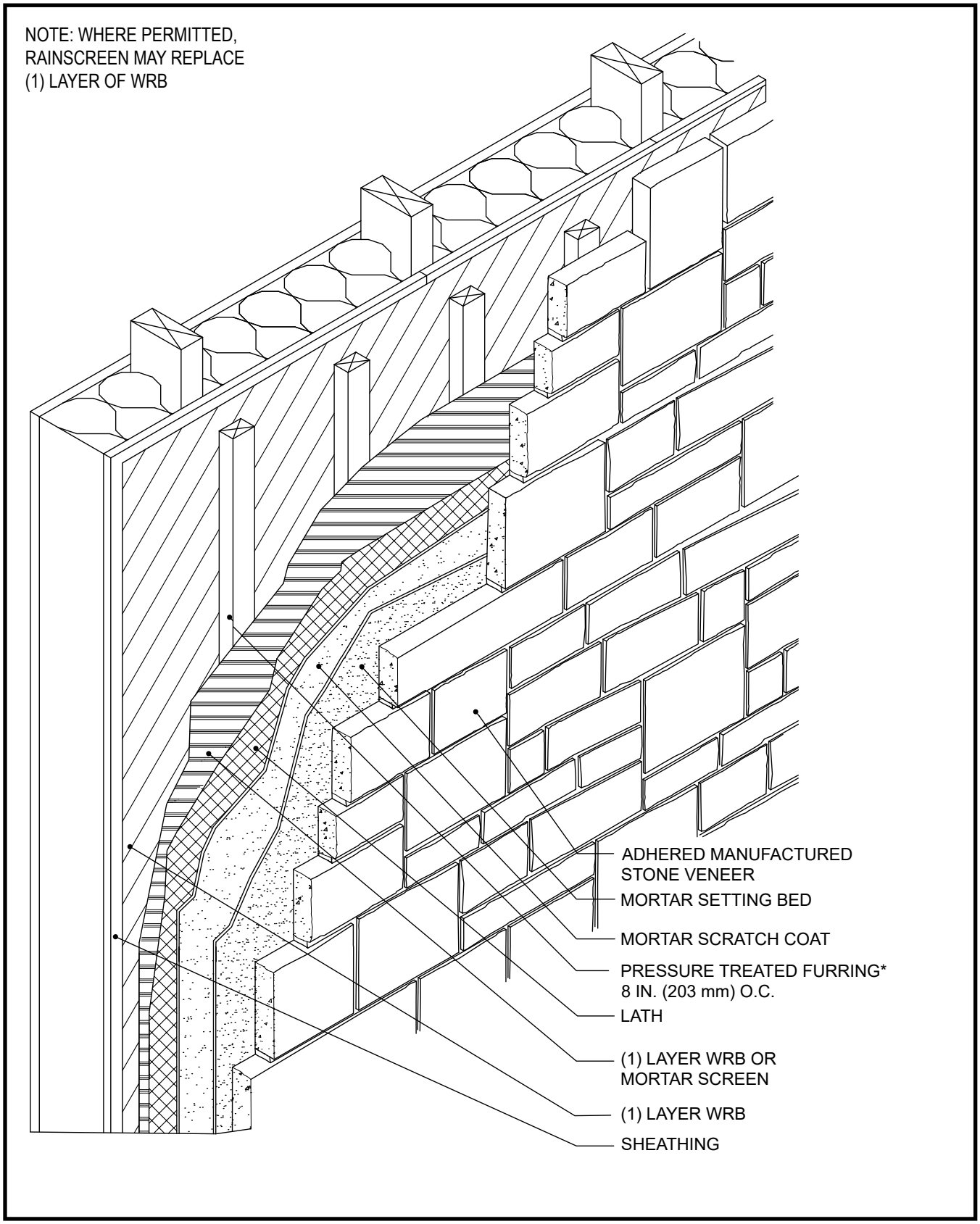

# Figure 37. Foundation Wall Base – Rainscreen System

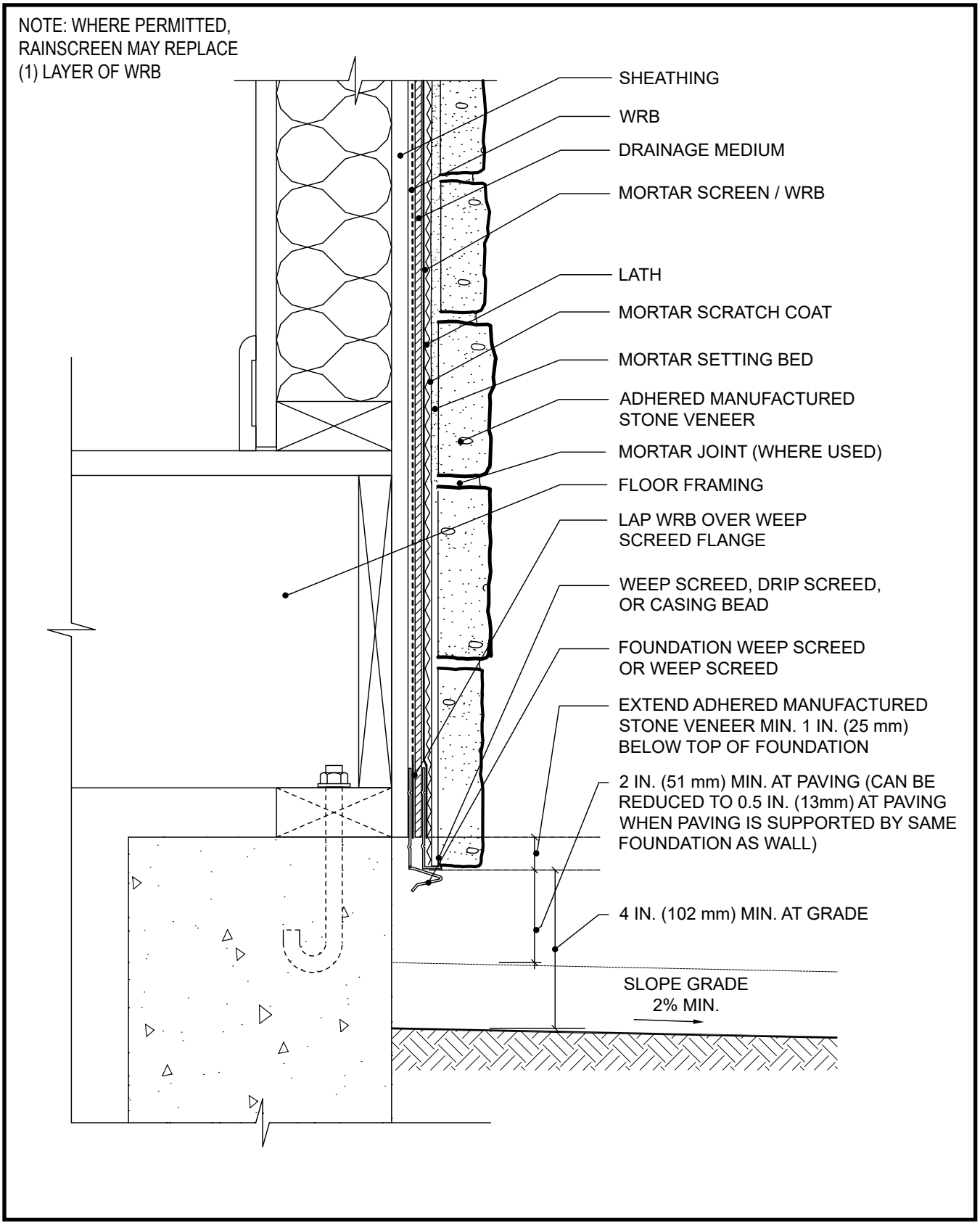

# Figure 38. Typical Wall Section – Rainscreen System

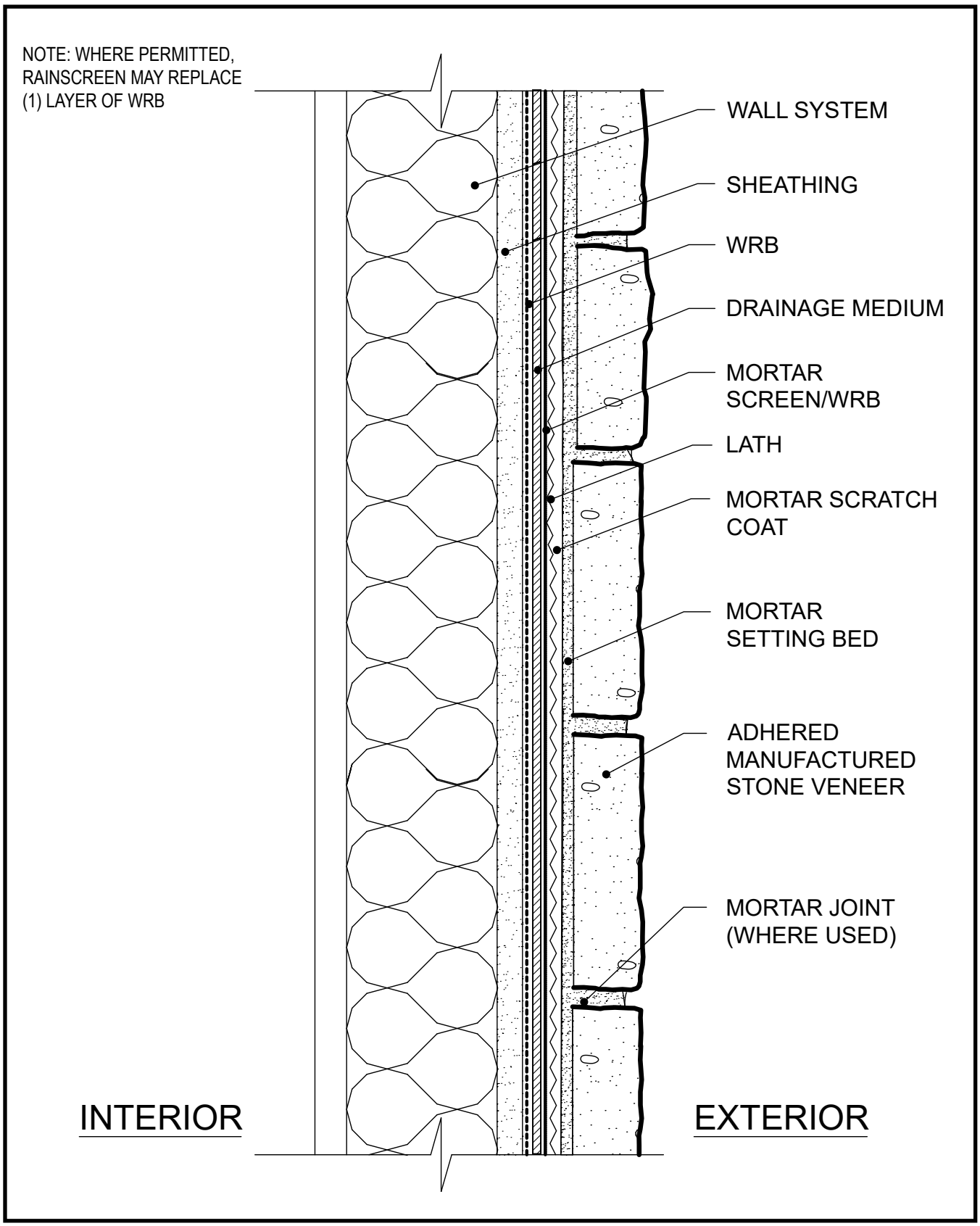

# Figure 39. Retaining Wall (CMU)

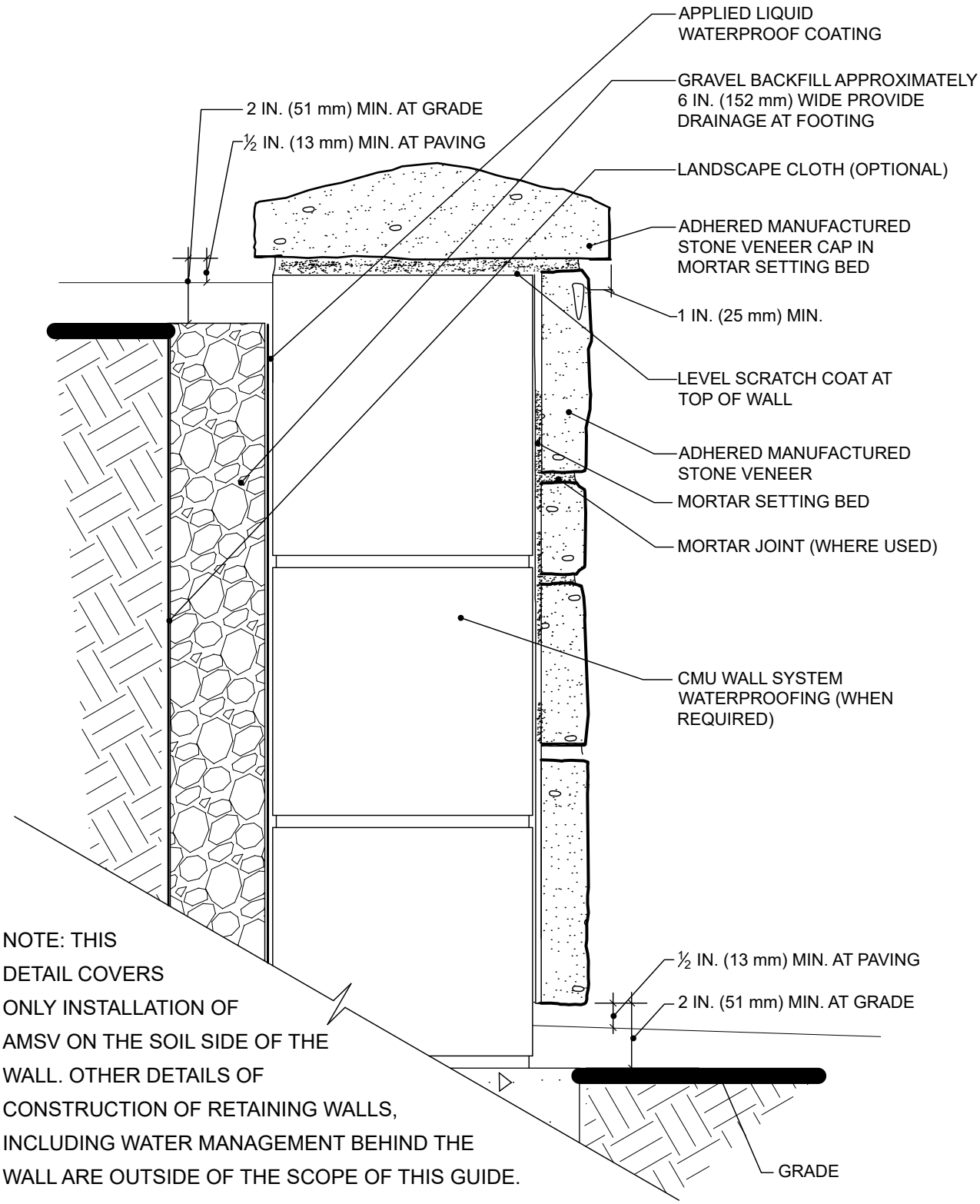


NOTE: THIS DETAIL COVERS ONLY INSTALLATION OF AMSV ON THE SOIL SIDE OF THE WALL. OTHER DETAILS OF CONSTRUCTION OF RETAINING WALLS, INCLUDING WATER MANAGEMENT BEHIND THE WALL ARE OUTSIDE OF THE SCOPE OF THIS GUIDE.

SECTION VIEW

# Figure 40. Stone Wrap Under Straight Overhang

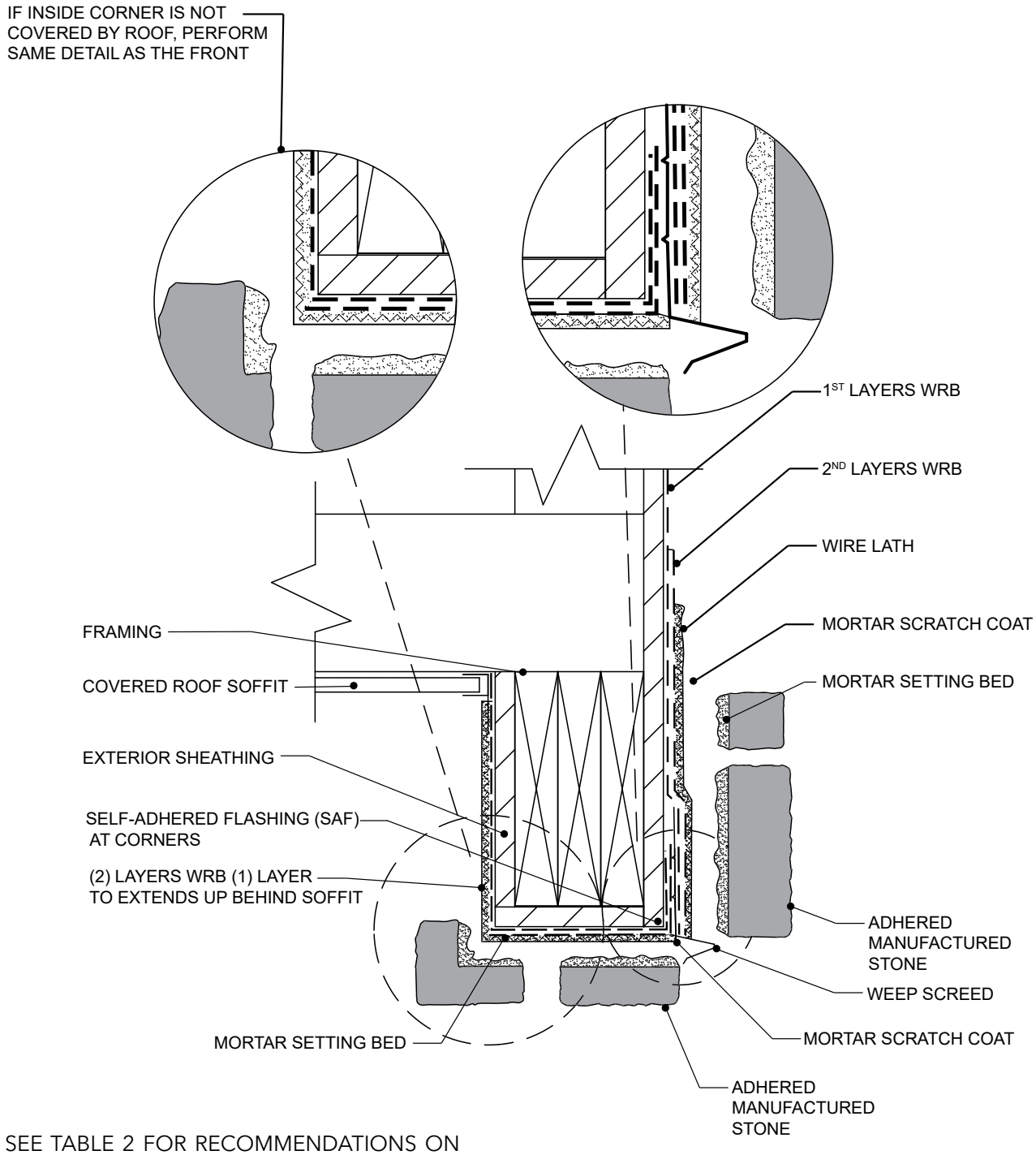


SEE TABLE 2 FOR RECOMMENDATIONS ON SETTING BED MORTAR FOR NON-VERTICAL APPLICATION.

# Figure 41a. Forward Mounted Commercial Window

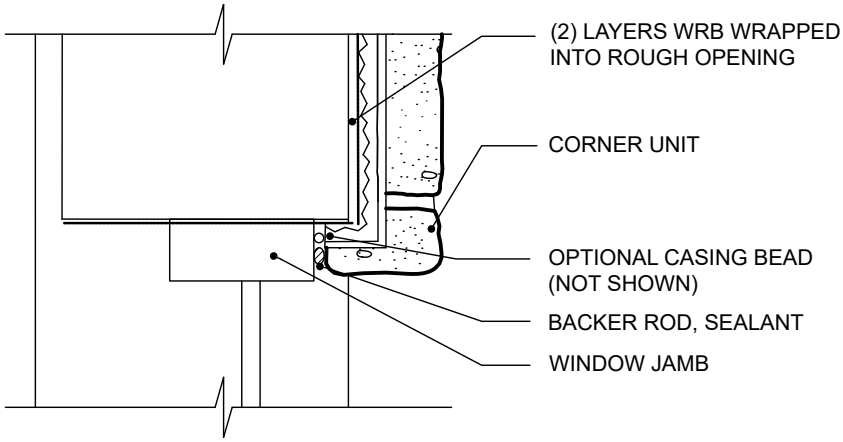


JAMB DETAIL

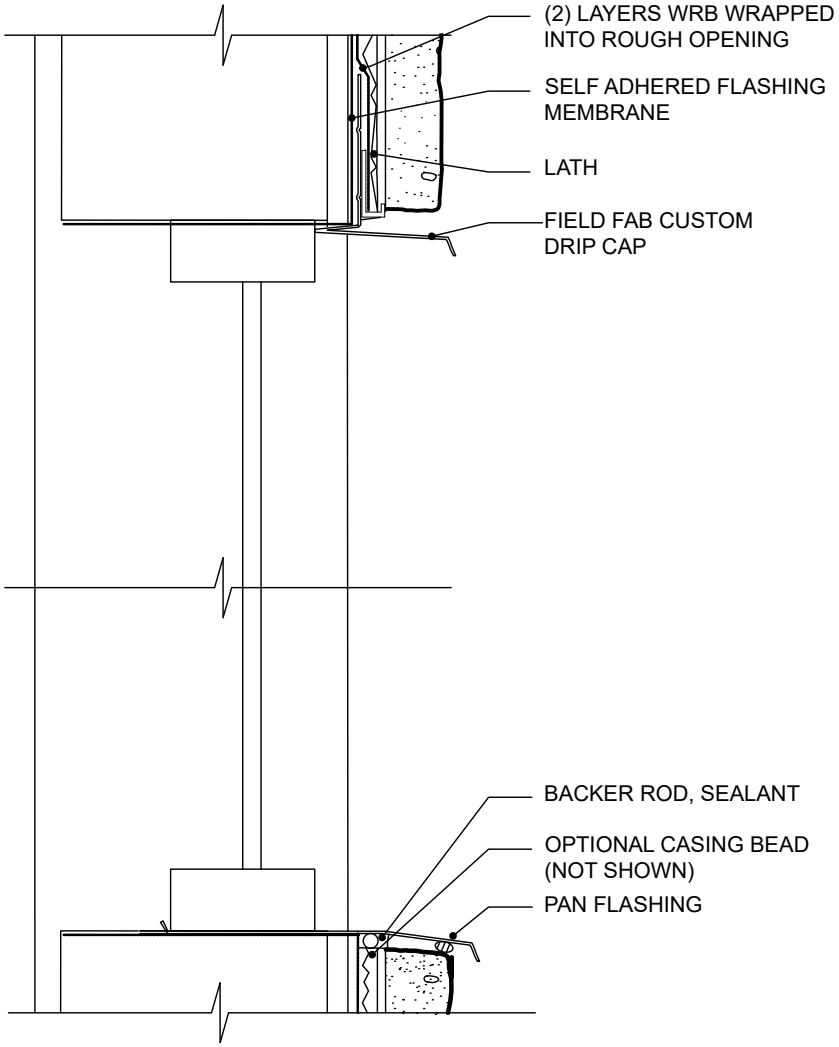

# Figure 41b. Forward Mounted Commercial Window Over Continuous Insulation

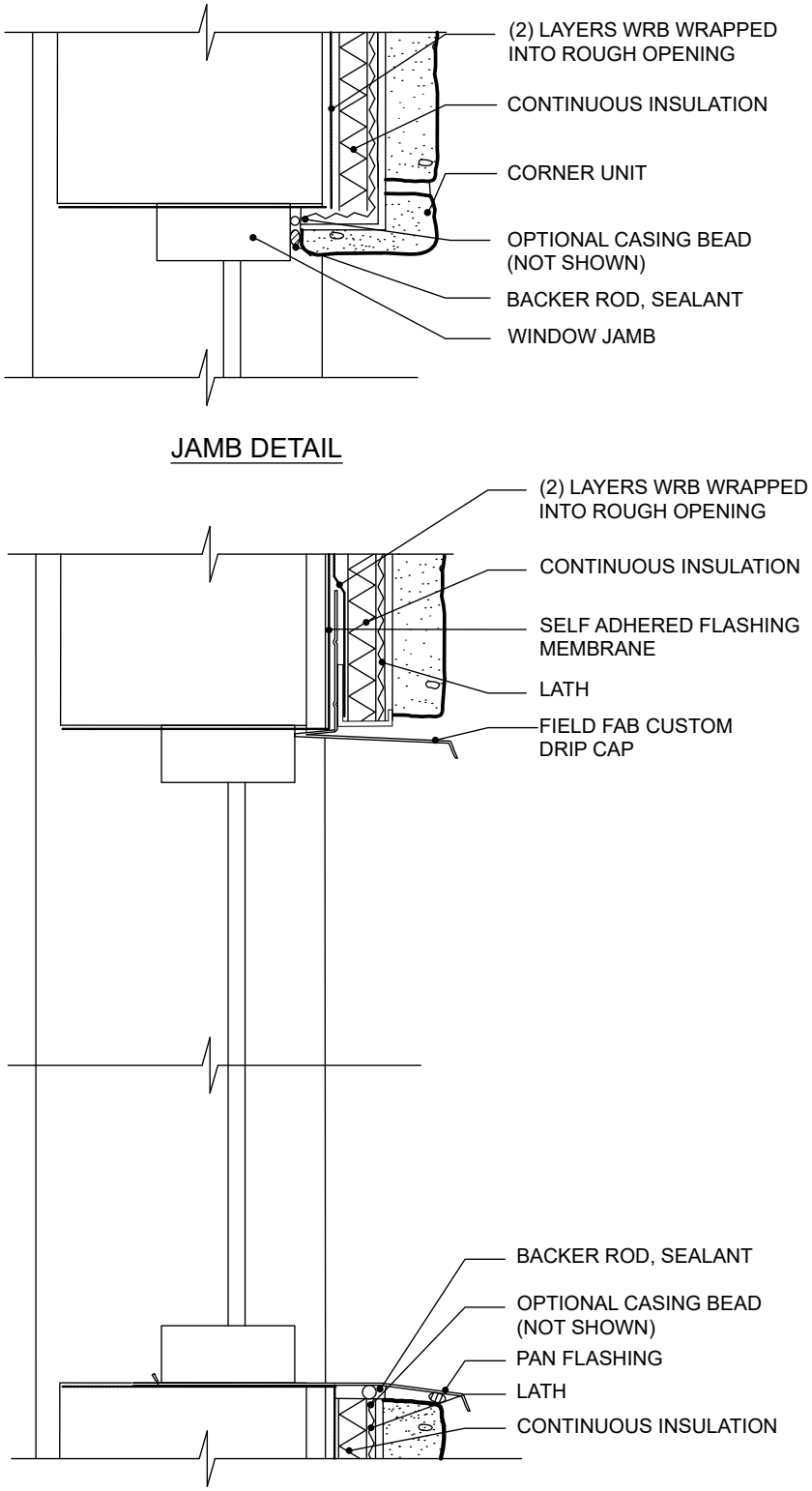

# Figure 42. Forward Mounted Commercial Window—Top View

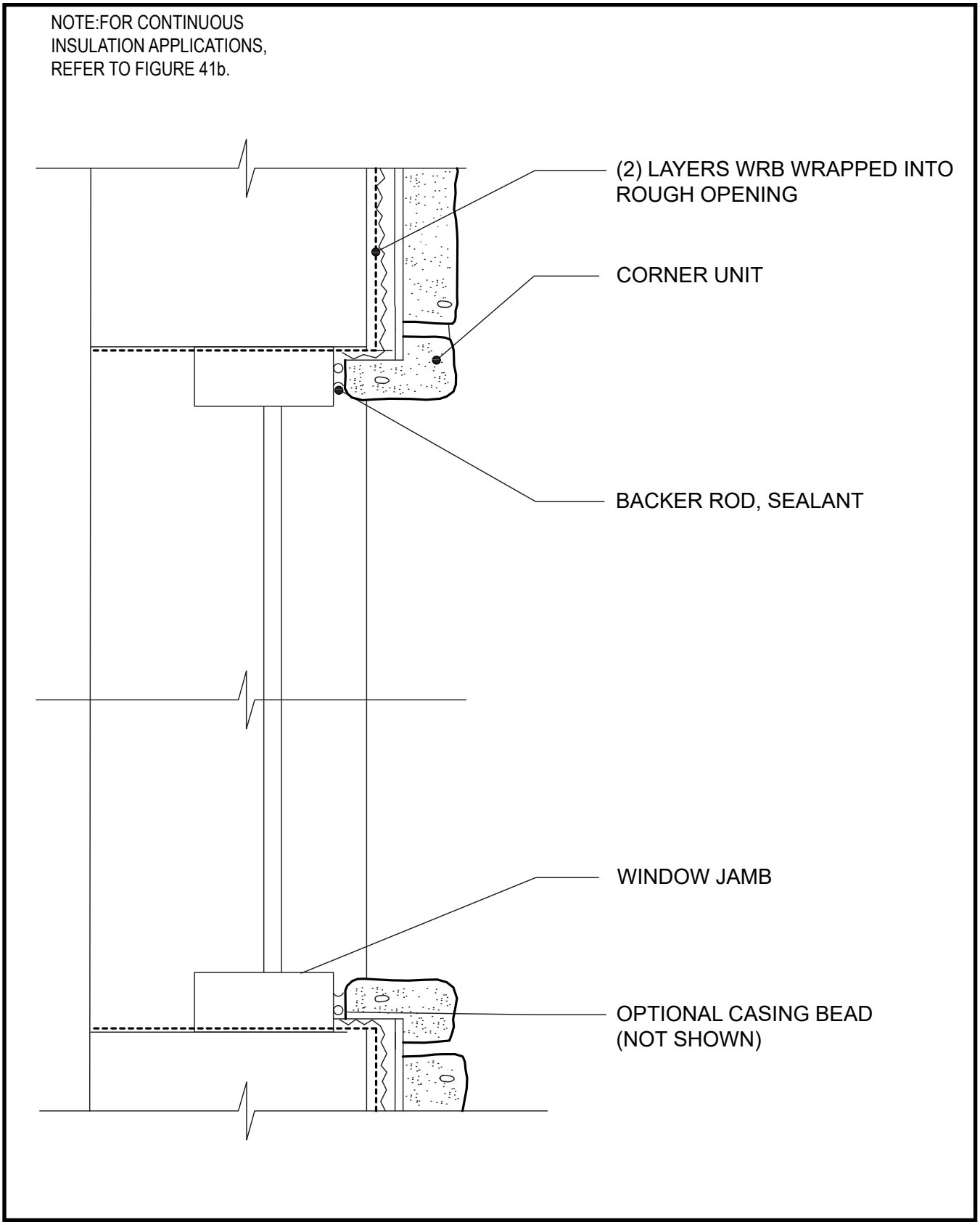

# Figure 43. Commercial Storefront Window—Top View

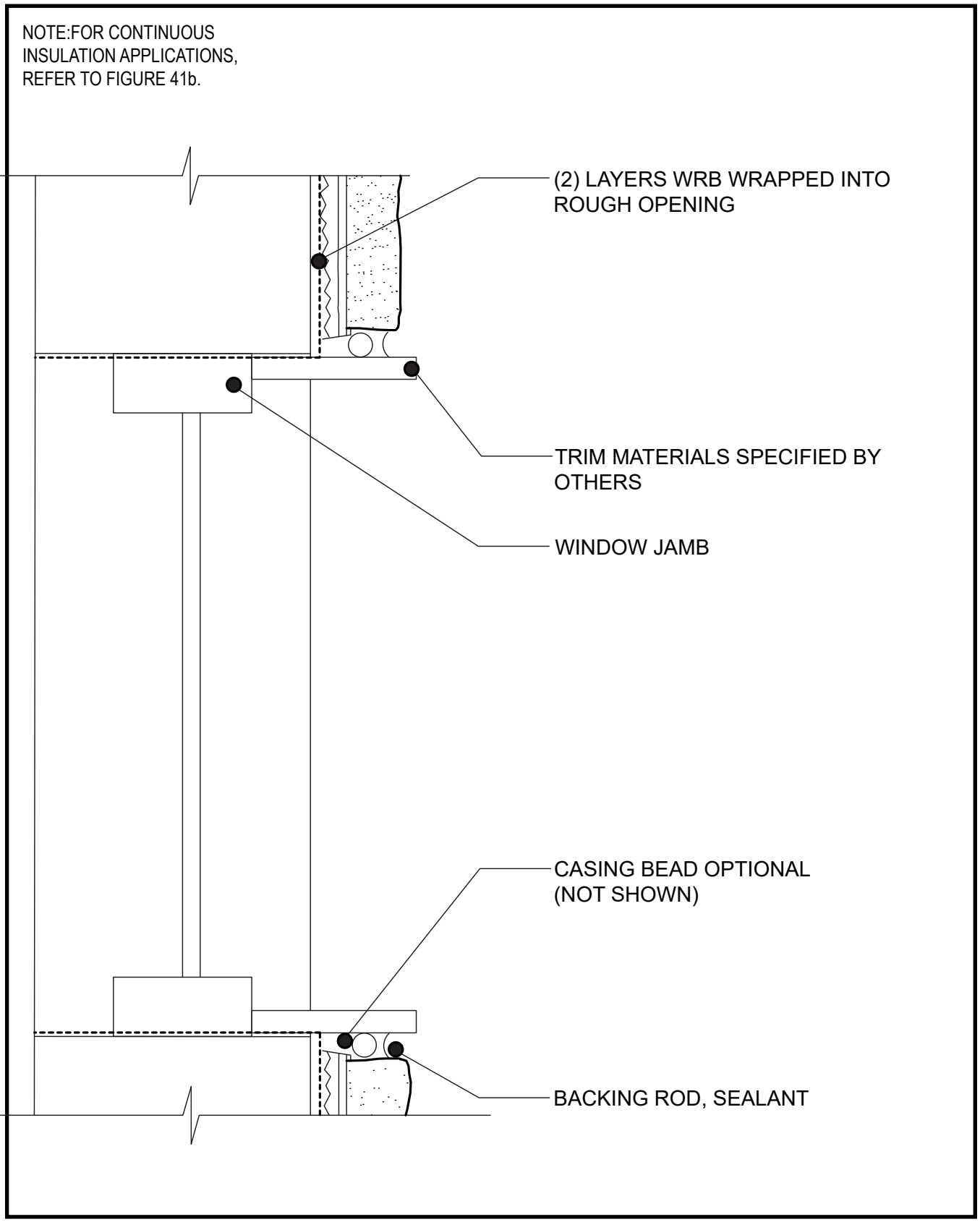

# Figure 44. Commercial Storefront Window

NOTE:FOR CONTINUOUS INSULATION APPLICATIONS, REFER TO FIGURE 41b.

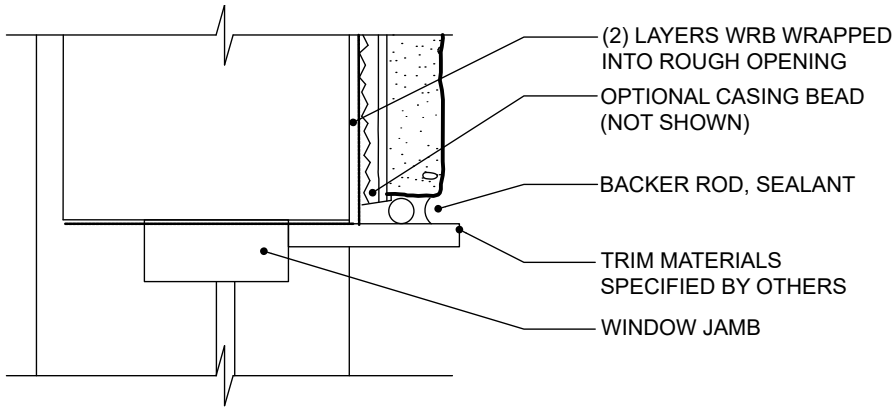


JAMB DETAIL

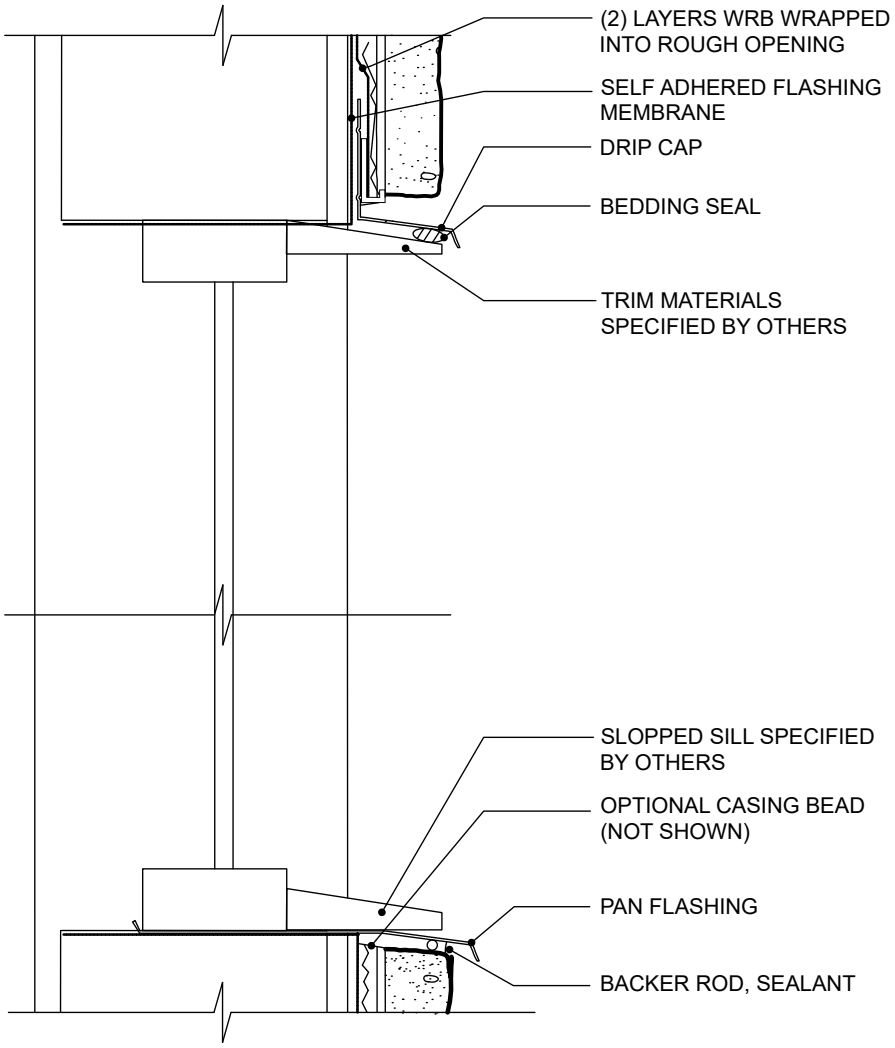

# Figure 45. Wall—Section Multi-Floor Joint Detail

NOTE:FOR CONTINUOUS INSULATION APPLICATIONS, REFER TO FIGURE 41b.

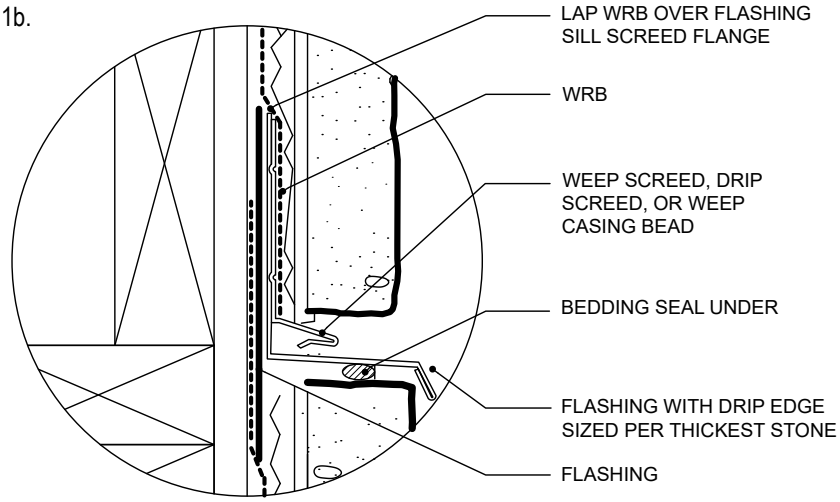


DETAIL

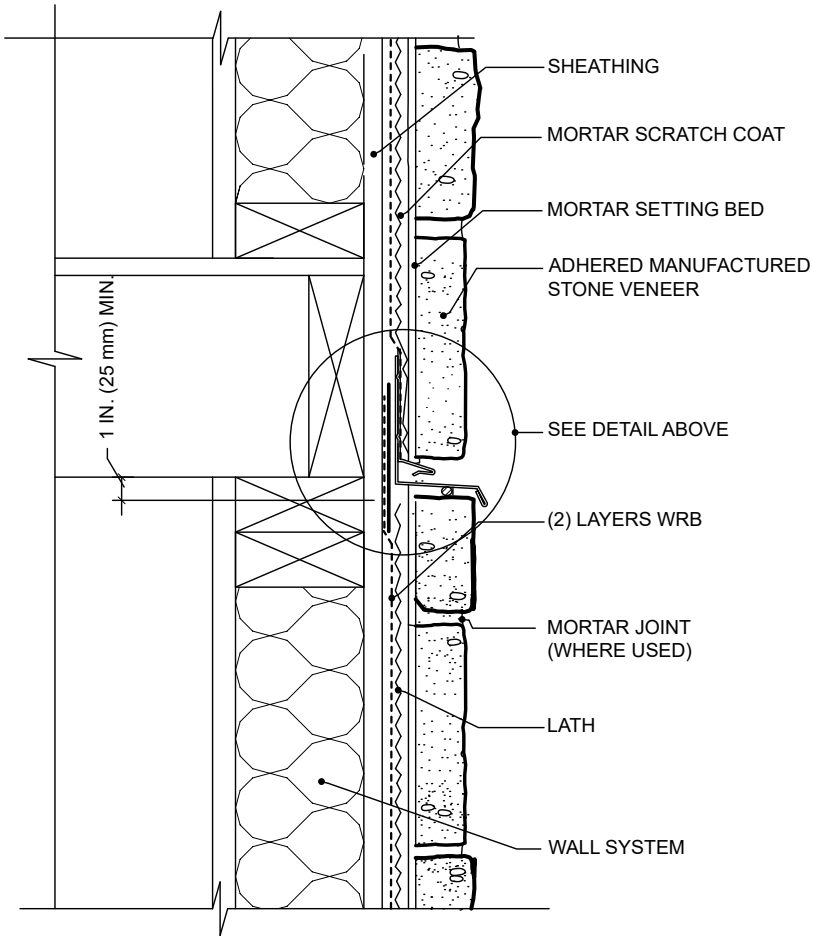

# Figure 46a. Wall—Section CMU

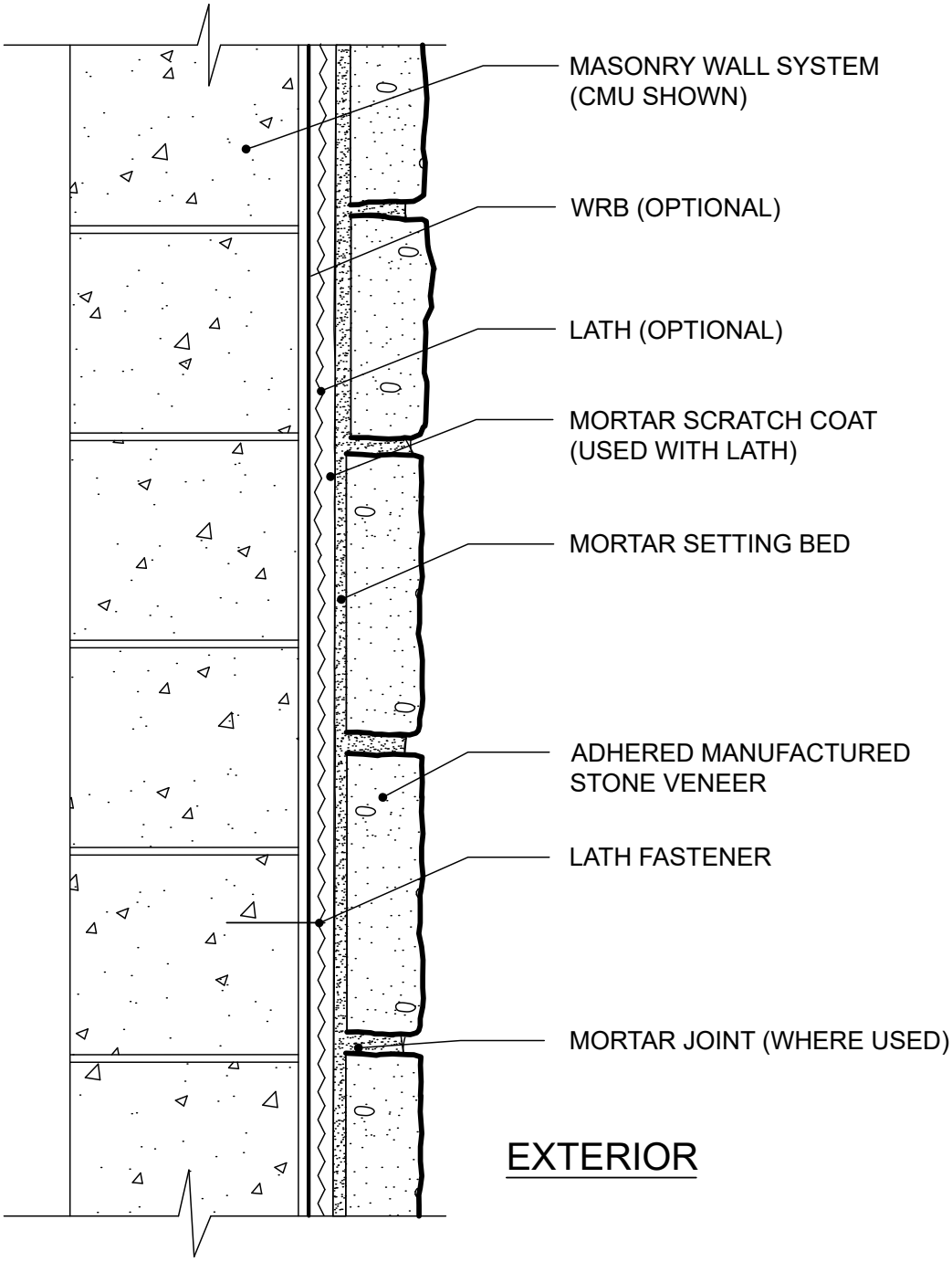

# Figure 46b. Wall—Section Over Continuous Rigid Insulation

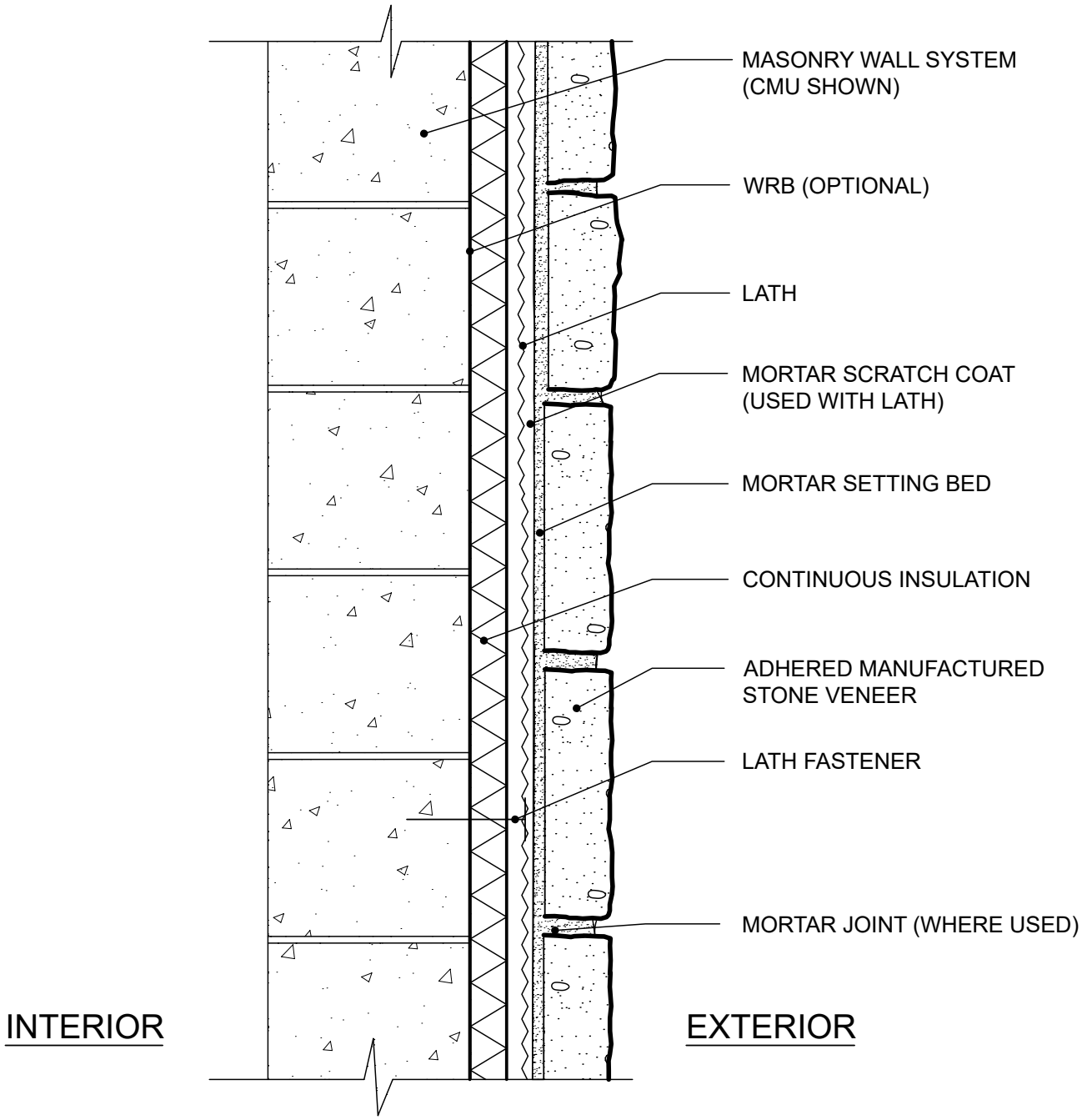

# Figure 47. Wall-Section Parapet with Stone Cap

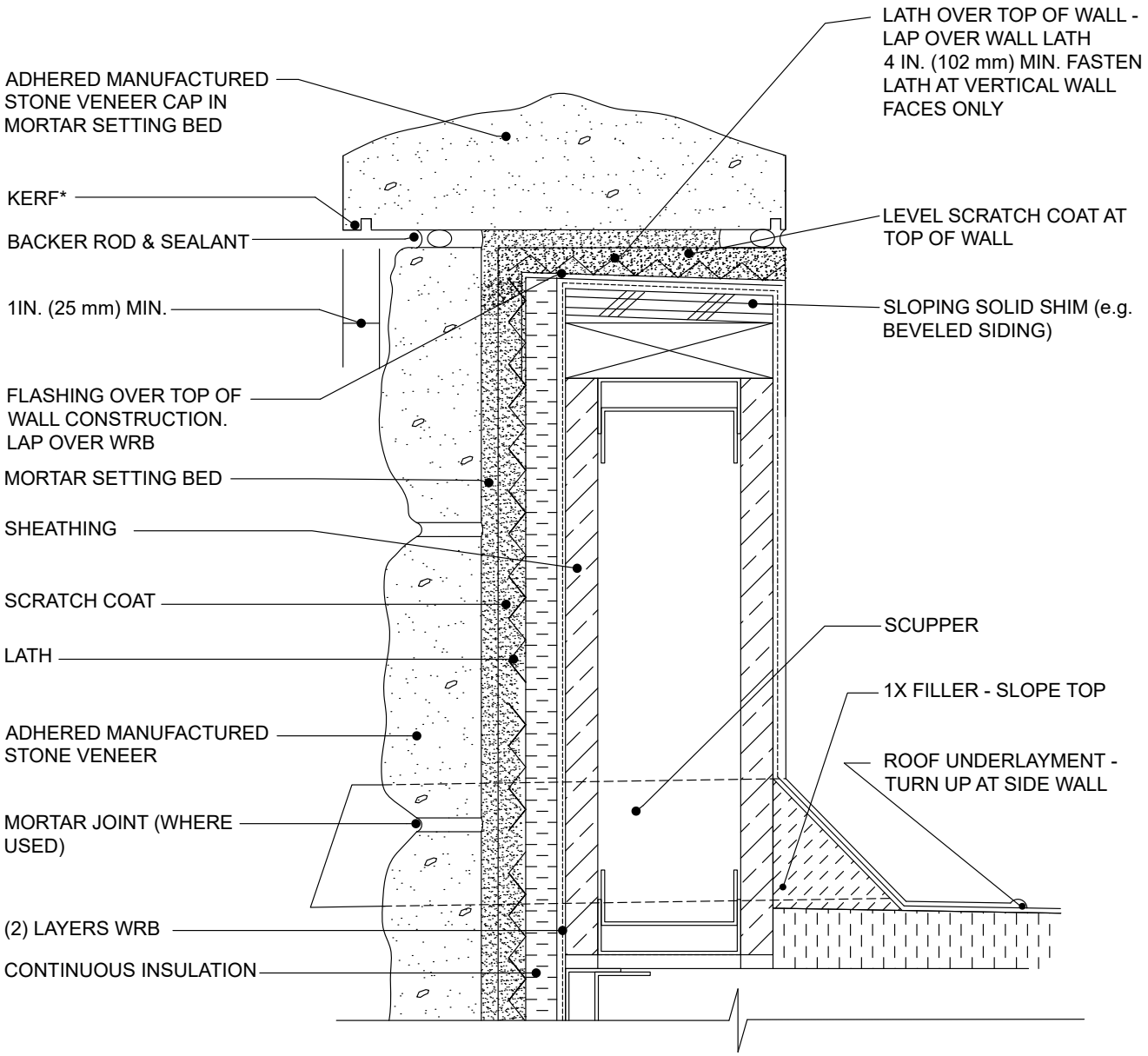


*Kerfs are typically not a molded feature of manufactured stone units, but instead are field-cut features where desired.

# Figure 48. Wall-Section Parapet with Steel Cap

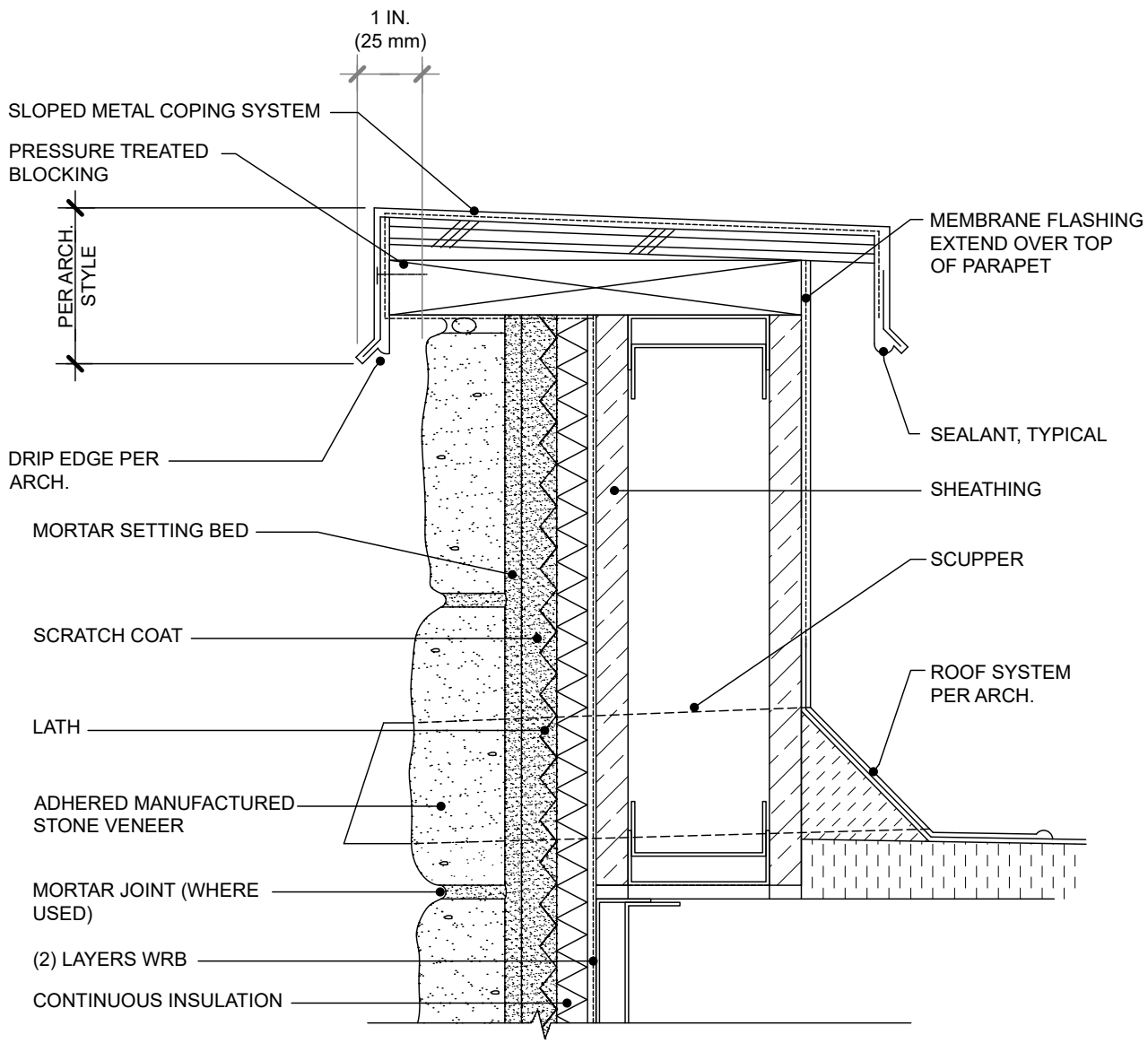

## Notes:

**Notes:**

# Masonry Veneer Manufacturers Association Associate Members

BASF
www.basf.com

ClarkDietrich Building Systems
www.clarkdietrich.com

Laticrete International Inc.
https://laticrete.com

PermaBase Cement Board (National Gypsum)
www.nationalgypsum.com

Plastic Components Inc.
http://plasticomponents.com/

Smooth-On, Inc.
www.smooth-on.com/

SPEC MIX, Inc.
www.specmix.com/

Masonry Veneer Manufacturers Association

For additional information or questions on the items contained here, please contact NCMA at:
(703) 713-1900

Copyright © 2017 NCMA All Rights Reserved.
NCMA and its respective logos are trademarks of NCMA. In the United States and other countries.