E.S. WINDOWS, INC.
ES-PSD5030T PIVOT DOOR - L.M.I.

GENERAL NOTES:

- THIS PRODUCT HAS BEEN DESIGNED AND TESTED TO COMPLY WITH THE REQUIREMENTS OF THE 8TH EDITION FLORIDA BUILDING CODE (2023) INCLUDING HIGH VELOCITY HURRICANE ZONE (HVHZ).
- DOORS RATED FOR LARGE MISSILE IMPACT. LMI SYSTEM TO BE USED FOR INSTALLATIONS UP TO 30 FT OF GRADE. FOR ABOVE 30 FT OF GRADE, SMI TO BE USED. IMPACT SHUTTERS ARE NOT REQUIRED.
- DOORS NOT APPROVED FOR WATER INFILTRATION.
- ANCHORS SHALL BE AS LISTED, SPACED AS SHOWN ON DETAILS. ANCHORS EMBEDMENT TO BASE MATERIAL SHALL BE BEYOND WALL DRESSING OR STUCCO.
- ANCHORING OR LOADING CONDITIONS NOT SHOWN IN THESE DETAILS ARE NOT PART OF THIS APPROVAL.
- MATERIALS INCLUDING BUT NOT LIMITED TO STEEL/METAL SCREWS THAT COME INTO CONTACT WITH OTHER DISSIMILAR MATERIALS SHALL MEET THE REQUIREMENTS OF THE 8TH EDITION FLORIDA BUILDING CODE (2023) SECTION AS APPLICABLE.
- METAL STRUCTURES BY OTHERS TO BE DESIGNED TO SUPPORT THE LOADS IMPOSED BY THIS GLAZING SYSTEM AND TO TRANSFER SUCH LOADS TO THE BUILDING MAIN STRUCTURE.
- ULTIMATE LOAD OBTAINED FROM ASCE 7-22, MULTIPLY BY 0.6 SHALL BE LESS THAN OR EQUAL TO MAX. DESIGN LOAD IN THIS DOCUMENT. THE DESIGN LOADS SHOWN IN THIS DOCUMENT ARE ALLOWABLE DESIGN LOADS.
- MANUFACTURER'S LABEL SHALL BE LOCATED ON A READILY VISIBLE LOCATION IN ACCORDANCE WITH SECTION 1709.9.3 OF FLORIDA BUILDING CODE LABELING TO COMPLY WITH SECTION 1709.9.2.

USE CHARTS AS FOLLOWS.

STEP 1: DETERMINE DESIGN WIND LOAD REQUIREMENTS BASED ON WIND VELOCITY, BLDG. HEIGHT, WIND ZONE USING APPLICABLE ASCE 7-22 STANDARD OR WIND TUNNEL REPORTS.

STEP 2: SEE SHEET E1 FOR TYPICAL DOOR ELEVATION. SEE SHEET G1 FOR GLASS OPTION.

STEP 3: SEE SHEET A1 FOR ANCHOR OPTIONS. SEE SHEET E1 FOR NUMBER OF ANCHORS REQUIRED.

STEP 4: THE LOWEST VALUE RESULTING FROM STEPS 2 & 3 THAT EXCEED THE DESIGN WIND PRESSURES DETERMINED THRU STEP 1 SHALL APPLY TO ENTIRE SYSTEM.

ABBREVIATIONS AND SYMBOLS

D.L.O. - DAYLITE OPENING
F.H. - FRAME HEIGHT
F.W. - FRAME WIDTH
W/ - WITH
W/O - WITHOUT
O.C. - ON CENTER

C / 7 — SECTION NUMBER / SHEET NUMBER

LIMITATIONS OF USE

A- THIS PRODUCT EVALUATION DOCUMENT (P.E.D.) PREPARED BY THIS ENGINEER IS GENERIC AND DOES NOT PROVIDE INFORMATION FOR A SITE SPECIFIC PROJECT; i.e. WHERE THE SITE CONDITIONS DEVIATE FROM THE P.E.D.

B- CONTRACTOR TO BE RESPONSIBLE FOR THE SELECTION, PURCHASE AND INSTALLATION OF THIS PRODUCT BASED ON THIS PRODUCT EVALUATION PROVIDED HE/SHE DOES NOT DEVIATE FROM THE CONDITIONS DETAILED ON THIS DOCUMENT.

C- THIS PRODUCT EVALUATION DOCUMENT WILL BE CONSIDERED INVALID IF ALTERED BY ANY MEANS.

D- SITE SPECIFIC PROJECTS SHALL BE PREPARED BY A FLORIDA REGISTERED ENGINEER OR ARCHITECT WHICH WILL BECOME THE ENGINEER OF RECORD (E.O.R.) FOR THE PROJECT AND WHO WILL BE RESPONSIBLE FOR THE PROPER USE OF THE P.E.D ENGINEER OF RECORD, ACTING AS A DELEGATED ENGINEER TO THE P.E.D ENGINEER SHALL SUBMIT TO THIS LATTER THE SITE SPECIFIC DRAWINGS FOR REVIEW.

E- THIS P.E.D. SHALL BEAR THE DATE AND ORIGINAL SEAL AND SIGNATURE OF THE PROFESSIONAL ENGINEER OF RECORD THAT PREPARED IT.

FLORIDA APPROVAL:

FL # 41358.1

YIPING WANG, P.E.
FLORIDA REGISTRATION
LICENSE # 55583
C.A.N. 28677
STATE OF FLORIDA PROFESSIONAL ENGINEER No 55583

February 26th, 2025

MCY ENGINEERING, INC.
GLAZING CONSULTANTS
1278I MIRAMAR PARKWAY #301
MIRAMAR, FL 33027
P: 305 271 0117
www.MCYEngineering.com mcy@mcyengineering.com

ES-PSD5030T PIVOT DOOR - L.M.I.

E.S. WINDOWS, INC.
10653 NE QUAYBRIDGE CT.
MIAMI, FL33138
TEL.(305) 624-7775

Rev. No.	Date	Drawn By	Description
R5	02.26.2025	James	REVISION

Drawn Date	Drawn By
02.26.2025	James

DRAWING NO.
AD22-07

COVER

Sheet No.
1 OF 12

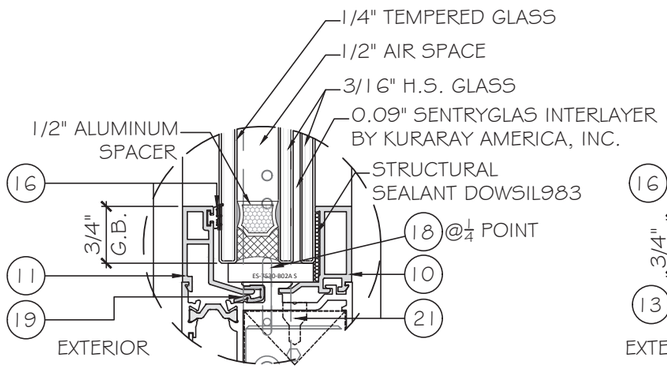

G1 GLASS TYPE 'G1'
1 3/16" NOMINAL OVERALL

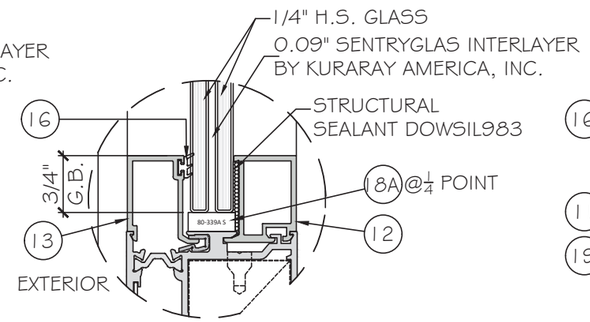

G2 GLASS TYPE 'G2'
9/16" NOMINAL OVERALL

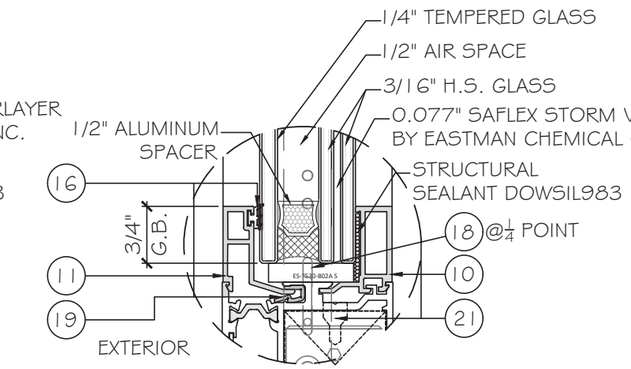

G5 GLASS TYPE 'G5'
1 3/16" NOMINAL OVERALL

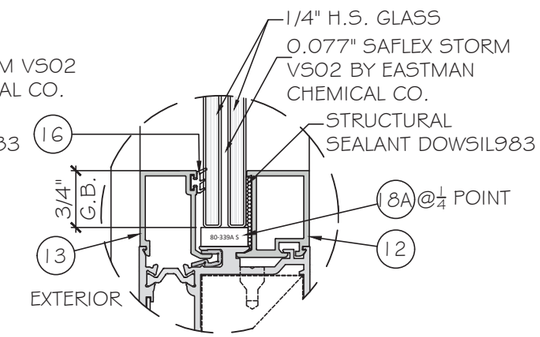

G6 GLASS TYPE 'G6'
9/16" NOMINAL OVERALL

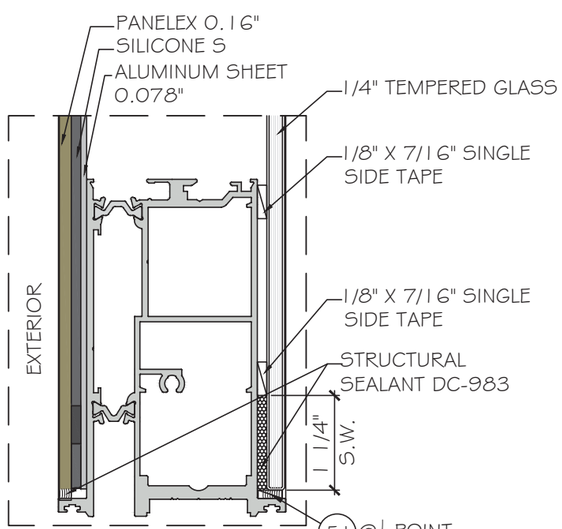

G3 PANEL TYPE 'G3'

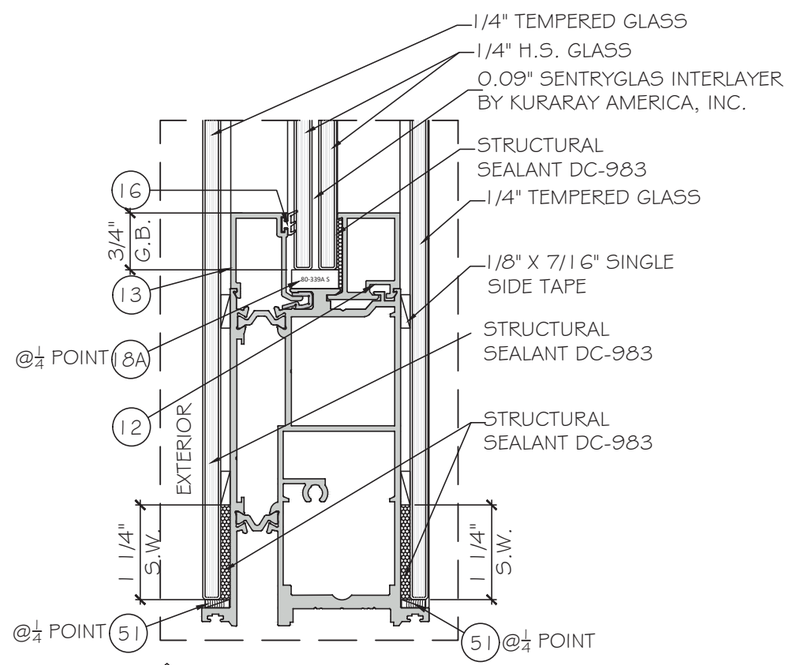

G4 GLASS TYPE 'G4'

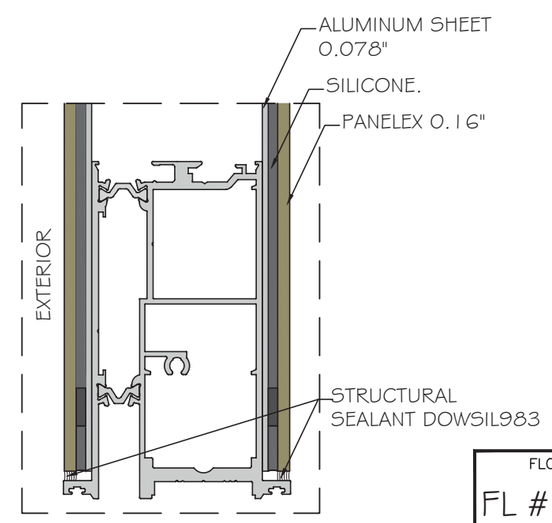

GP PANELEX

NOTE:
GLASS COMPLIES WITH ASTM E1300-16 (3 SEC. GUSTS).

FLORIDA APPROVAL:
FL # 41358.1

YIPING WANG, P.E.
FLORIDA REGISTRATION
LICENSE #55983
C.A.N. 28677

YIPING WANG, P.E.
LICENSE No 55983
STATE OF FLORIDA
PROFESSIONAL ENGINEER

February 26th, 2025

MCY ENGINEERING, INC.
GLAZING CONSULTANTS
12781 MIRAMAR PARKWAY #301
MIRAMARI, FL. 33027
P: 305 271 0117
www.MCYEngineering.com
mcy@mcyengineering.com

ES-PSD5030T PIVOT DOOR - L.M.I.
E.S. WINDOWS, INC.
10653 NE QUAYBRIDGE CT.
MIAMI, FL33138
TEL.(305) 624-7775

Rev. No.	Date	Drawn By	Description
R5	02.26.2025	James	REVISION

Drawn Date 02.26.2025
Drawn By James

DRAWING NO.
AD22-07

G1

Sheet No.
2 OF 12

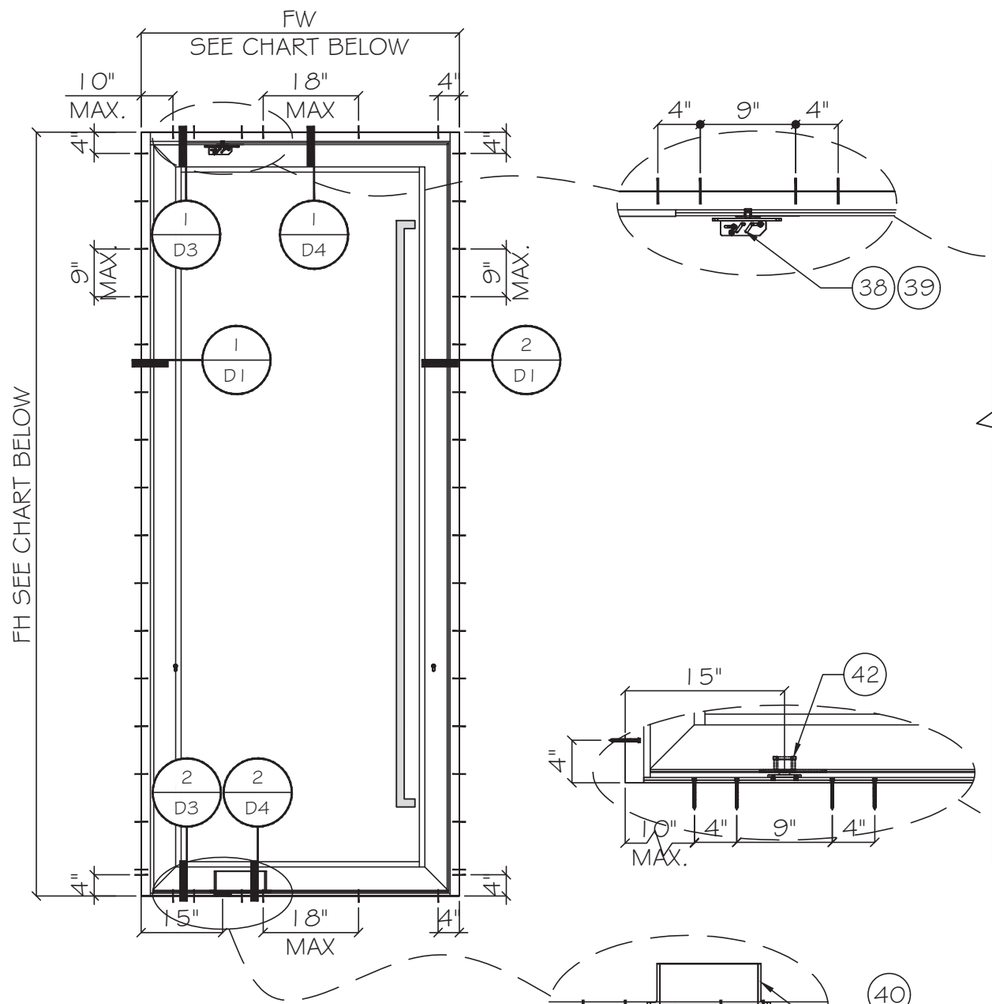

TYPICAL EXTERIOR ELEVATIONS

PIVOT OPTION

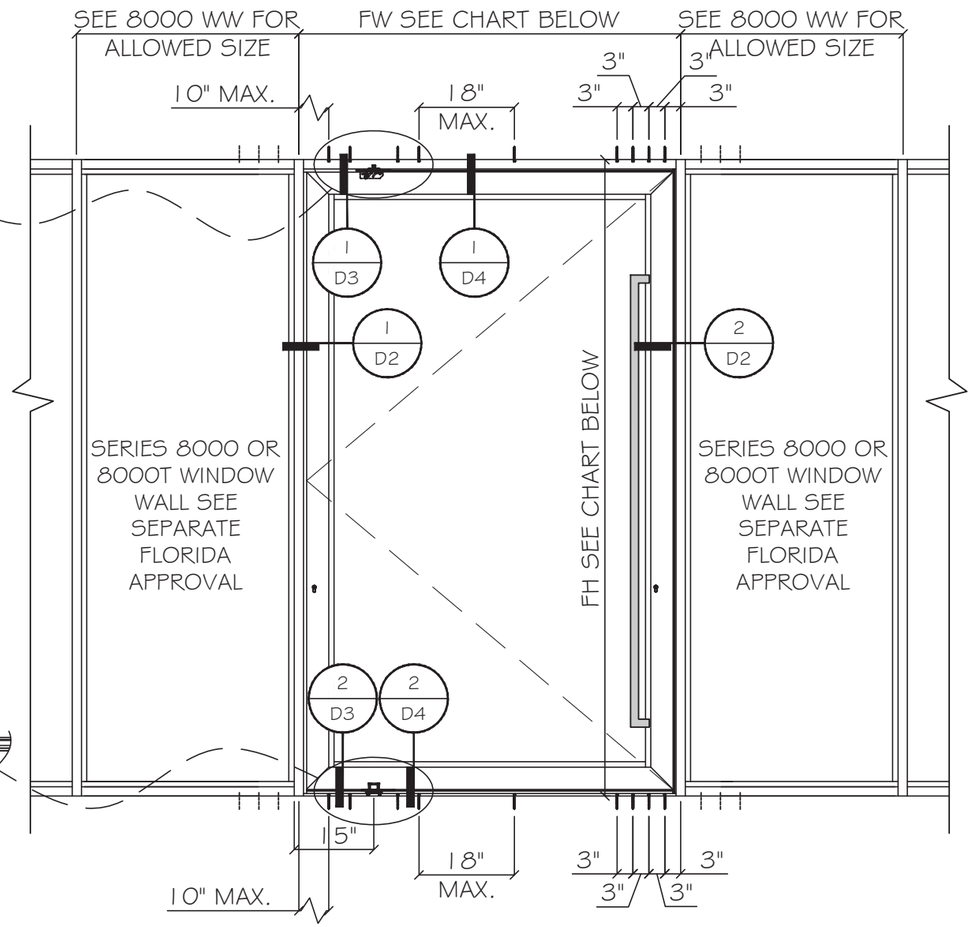

TYPICAL EXTERIOR ELEVATIONS

ALLOWABLE DESIGN LOADS				
DIMENSIONS (INCH)		GLASS TYPE	Pd(PSF)	HARDWARE
FW (MAX.)	FH (MAX.)			
60"	144"	G1 OR G2 OR G3 OR G4 OR GP	±95	OPTION1
72"	120"		±95	OPTION1
90"	96"		±95	OPTION1
60"	120"	G5 OR G6	±90	OPTION1
72"	144"	G2 OR GP	±65	OPTION2

NOTE: FOR SIZE SHOWN ABOVE OR SMALLER AS PERMITTED BY FBC.
SEE SHEET 10 & 11 FOR HARDWARE COMPONENTS.

FLORIDA APPROVAL:
FL # 41358.1

YIPING WANG, P.E.
FLORIDA REGISTRATION
#55983
C.A.N. 28677

YIPING WANG, P.E.
LICENSE
No 55983
STATE OF FLORIDA
PROFESSIONAL ENGINEER

February 26th, 2025

MCY ENGINEERING, INC.
GLAZING CONSULTANTS
12781 MIRAMAR PARKWAY #301
MIRAMARI, FL. 33027
P: 305 271 0117
www.MCYEngineering.com mcy@mcyengineering.com

ES-PSD5030T PIVOT DOOR - L.M.I.
E.S. WINDOWS, INC.
10653 NE QUAYBRIDGE CT.
MIAMI, FL33138
TEL.(305) 624-7775

Rev. No.	Date	Drawn By	Description
R5	02.26.2025	James	REVISION

Drawn Date 02.26.2025
Drawn By James

DRAWING NO.
AD22-07

E1

Sheet No.
3 OF 12

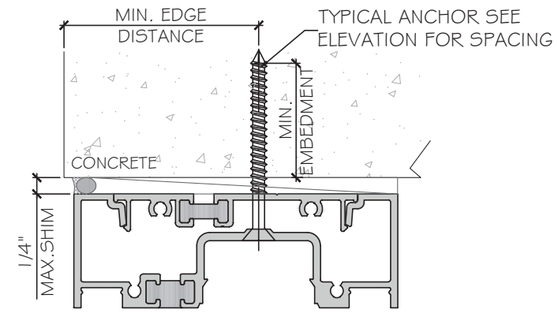

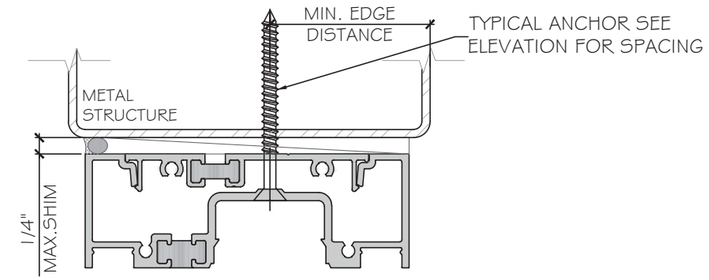

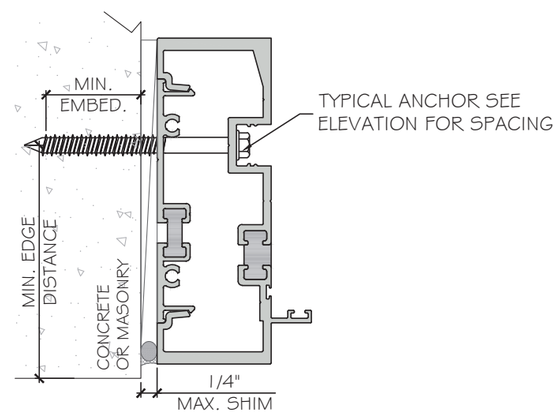

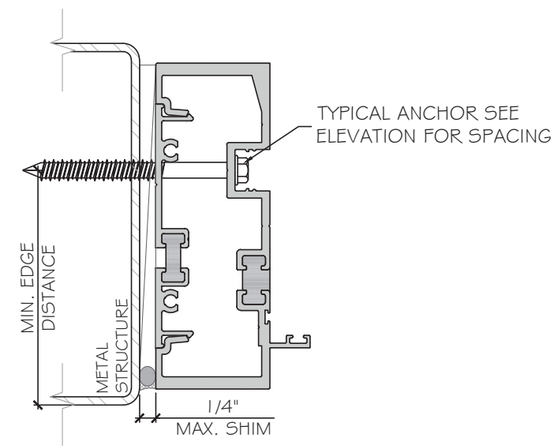

NOTE:METAL STRUCTURES BY OTHERS MUST BE PROPERLY SECURED TO SUPPORT LOADS IMPOSED BY GLAZING SYSTEM AND TRANSFER THEM TO THE BUILDING STRUCTURES.

TYPICAL ANCHOR TYPES:

SEE ELEVATIONS FOR SPACING

TYPE "A": 1/4" DIA. ULTRACON+ BY 'DEWALT' (Fu=164 KSI, Fy=148 KSI)
DIRECTLY INTO CONCRETE
WITH 1 3/4" MIN. EMBED

INTO HOLLOW BLOCK (JAMB ONLY)
WITH 1 1/4" MIN. EMBED

INTO GROUT FILLED BLOCKS (JAMB ONLY)
WITH 1 3/4" MIN. EMBED

TYPE "B": 1/4" SELF DRILLING SCREW(GRADE 5) (Fu=120 KSI, Fy=90 KSI)
INTO APPROVED MULLIONS
(1/8" THK. MIN.) INTO METAL STRUCTURE

STEEL: 1/8" MIN. (Fy=36 KSI MIN.)
ALUMINUM: 1/8" THK. MIN. (6063-T6 MIN.)
(3) THREADS MIN. PENETRATION BEYOND METAL SUBSTRATE
(STEEL IN CONTACT WITH ALUMINUM TO BE ISOLATED OR PAINTED)

TYPICAL ANCHOR EDGE DISTANCE:
INTO CONCRETE AND MASONRY = 2 1/2" MIN.
INTO METAL STRUCTURE = 3/4" MIN.

WOOD SG = 0.55 MIN.
CONCRETE f'c = 3000 psi MIN.
C-90 HOLLOW/FILLED BLOCK f'm = 2000 psi MIN.
NORMAL STRENGTH CMU(AT JAMB ONLY)

GLAZING BEAD AT FRAME SILL SEALED TO GLASS WITH DOW CORNING 791.
FRAME CORNERS SEALED WITH DOW CORNING 791 OR EQUAL COMPATIBLE

FLORIDA APPROVAL:
FL # 41358.1

YIPING WANG, P.E.
FLORIDA REGISTRATION
55983
C.A.N. 28677

YIPING WANG, P.E.
FLORIDA REGISTRATION
55983
C.A.N. 28677
STATE OF FLORIDA
PROFESSIONAL ENGINEER
No 55983

February 26th, 2025

MCY ENGINEERING, INC.
GLAZING CONSULTANTS
12781 MIRAMAR PARKWAY #301
MIRAMARI, FL. 33027 P: 305 271 0117
www.MCYEngineering.com mcy@mcyengineering.com

ES-PSD5030T PIVOT DOOR - L.M.I.
E.S. WINDOWS, INC.
10653 NE QUAYBRIDGE CT.
MIAMI, FL33138
TEL.(305) 624-7775

Rev. No.	Date	Drawn By	Description
R5	02.26.2025	James	REVISION

Drawn Date 02.26.2025
Drawn By James
DRAWING NO. AD22-07
A1
Sheet No. 4 OF 12

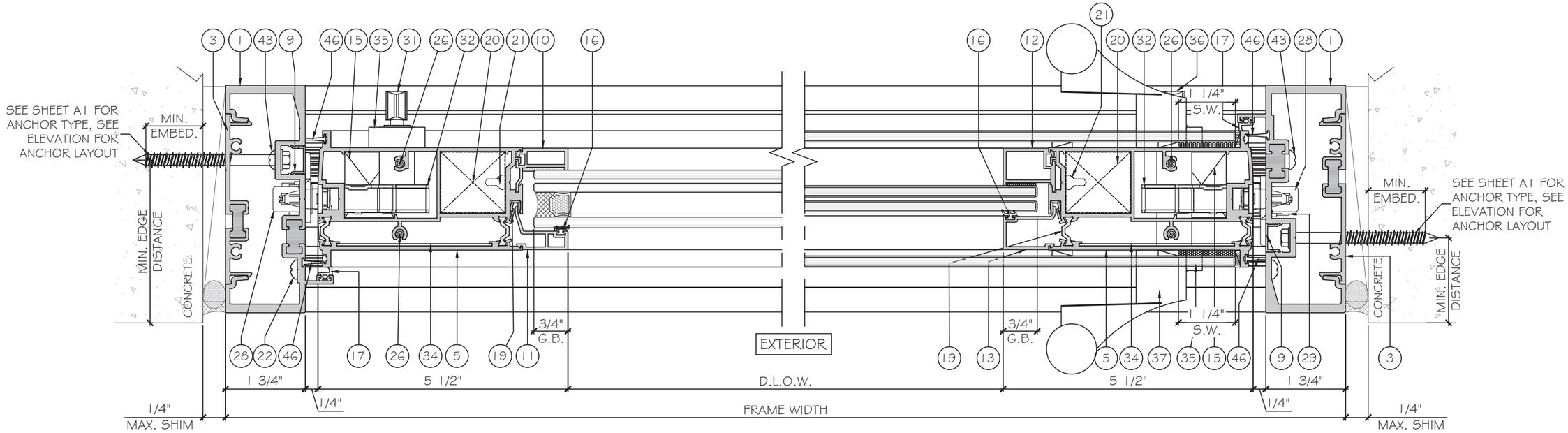

1 DETAIL D1

2 DETAIL D1

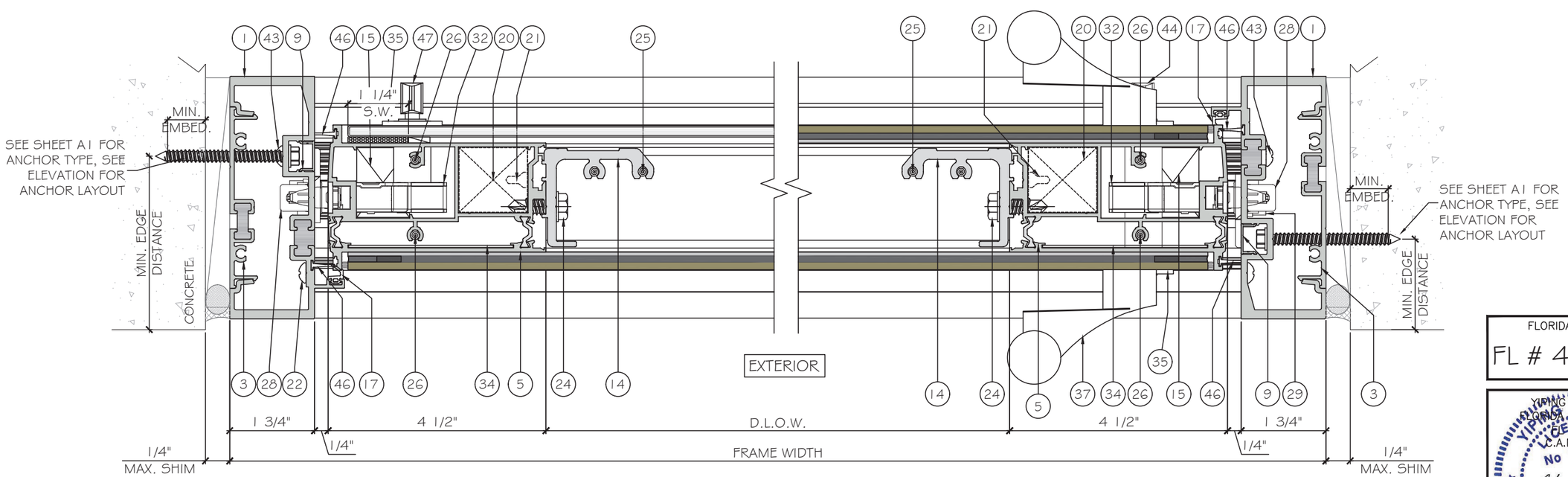

1 DETAIL D1 OPTION

2 DETAIL D1 OPTION

FLORIDA APPROVAL:

FL # 41358.1

YIPING WANG, FLORIDA REGISTRATION #55983 C.A.N. 28677

YIPING WANG LICENSE No 55983 STATE OF FLORIDA PROFESSIONAL ENGINEER

February 26th, 2025

MCY ENGINEERING, INC.
GLAZING CONSULTANTS
12781 MIRAMAR PARKWAY #301
MIRAMARI, FL. 33027
P: 305 271 0117
www.MCYEngineering.com mcy@mcyengineering.com

ES-PSD5030T PIVOT DOOR - L.M.I.

E.S. WINDOWS, INC.
10653 NE QUAYBRIDGE CT.
MIAMI, FL33138
TEL.(305) 624-7775

Rev. No.	Date	Drawn By	Description
R5	02.26.2025	James	REVISION

Drawn Date 02.26.2025

Drawn By James

DRAWING NO. AD22-07

D1

Sheet No. 5 OF 12

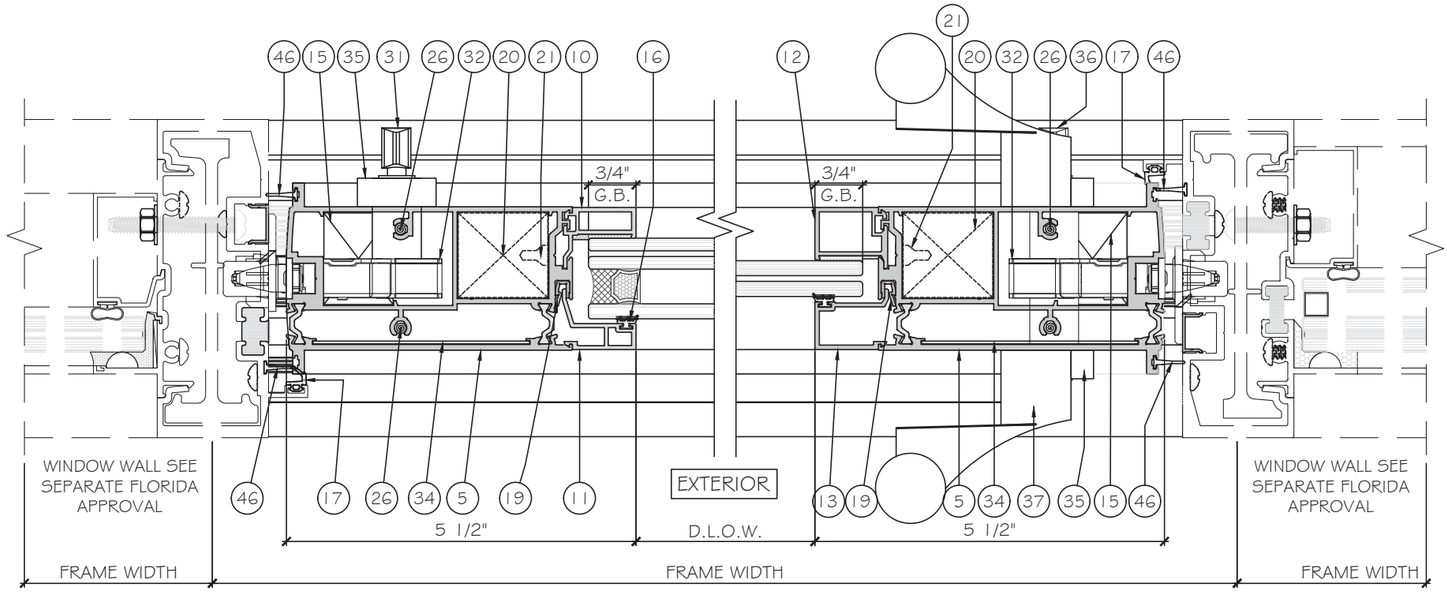

1 / D2 DETAIL

2 / D2 DETAIL

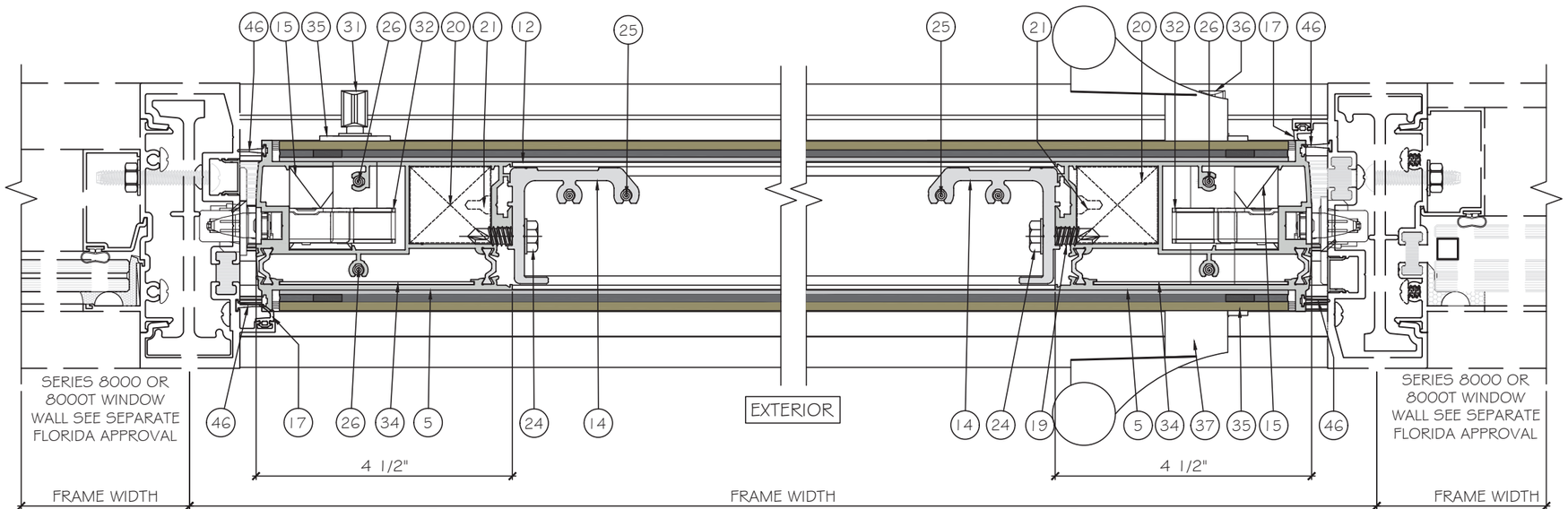

1 / D2 DETAIL OPTION

2 / D2 DETAIL OPTION

FLORIDA APPROVAL:

FL # 41358.1

YIMING WANG
FLORIDA REGISTRATION
LICENSE
C.A.N. 28677

STATE OF FLORIDA PROFESSIONAL ENGINEER No 55883

February 26th, 2025

MCY ENGINEERING, INC.
GLAZING CONSULTANTS
12781 MIRAMAR PARKWAY #301
MIRAMAR, FL 33027
P: 305 271 0117
www.MCYEngineering.com mcy@mcyengineering.com

ES-PSD5030T PIVOT DOOR - L.M.I.

E.S. WINDOWS, INC.
10653 NE QUAYBRIDGE CT.
MIAMI, FL33138
TEL.(305) 624-7775

Rev. No.	Date	Drawn By	REVISION	Description
R5	02.26.2025	James		

Drawn Date	Drawn By
02.26.2025	James

DRAWING NO.
AD22-07

D2

Sheet No.
6 OF 12

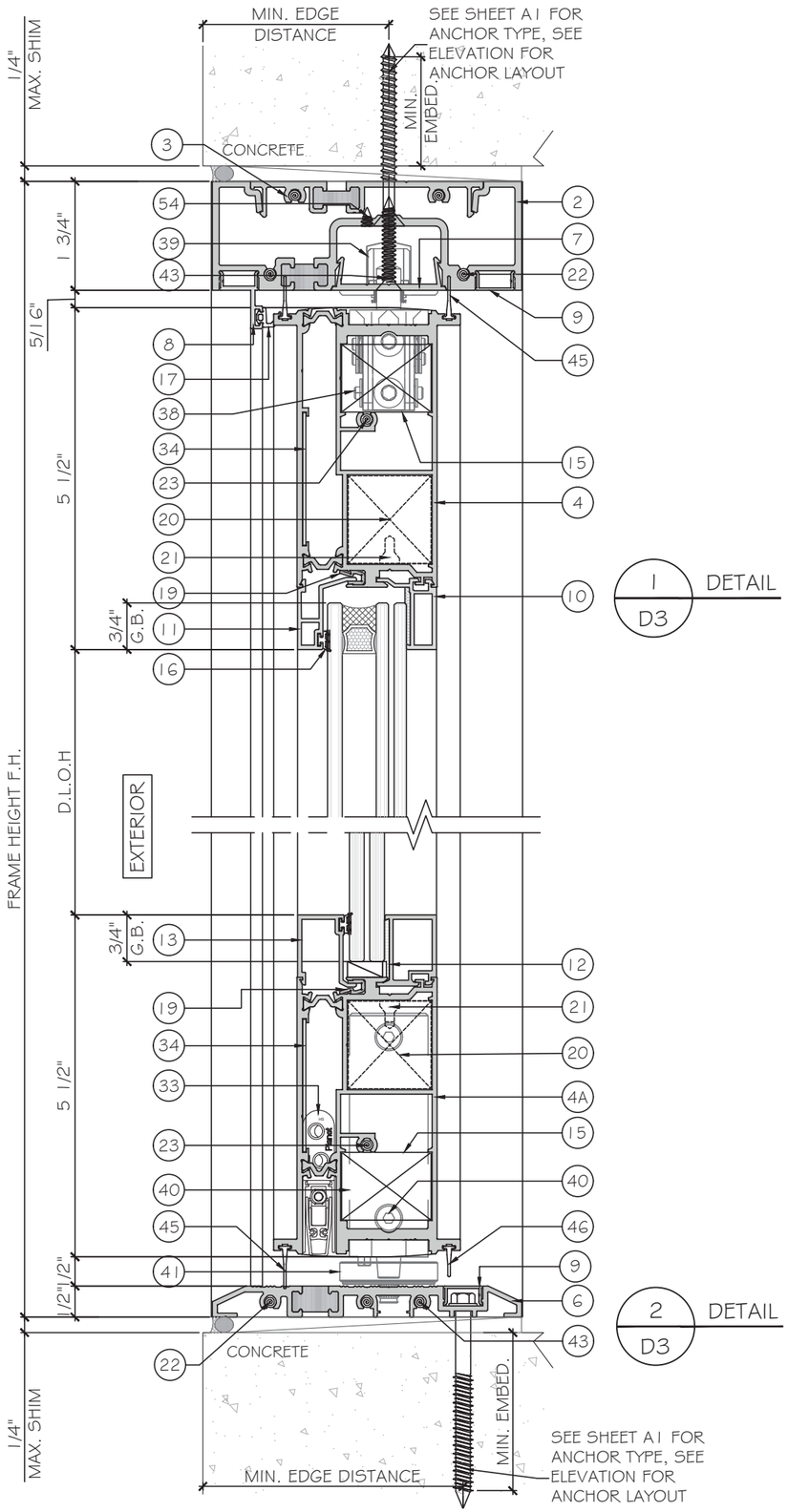

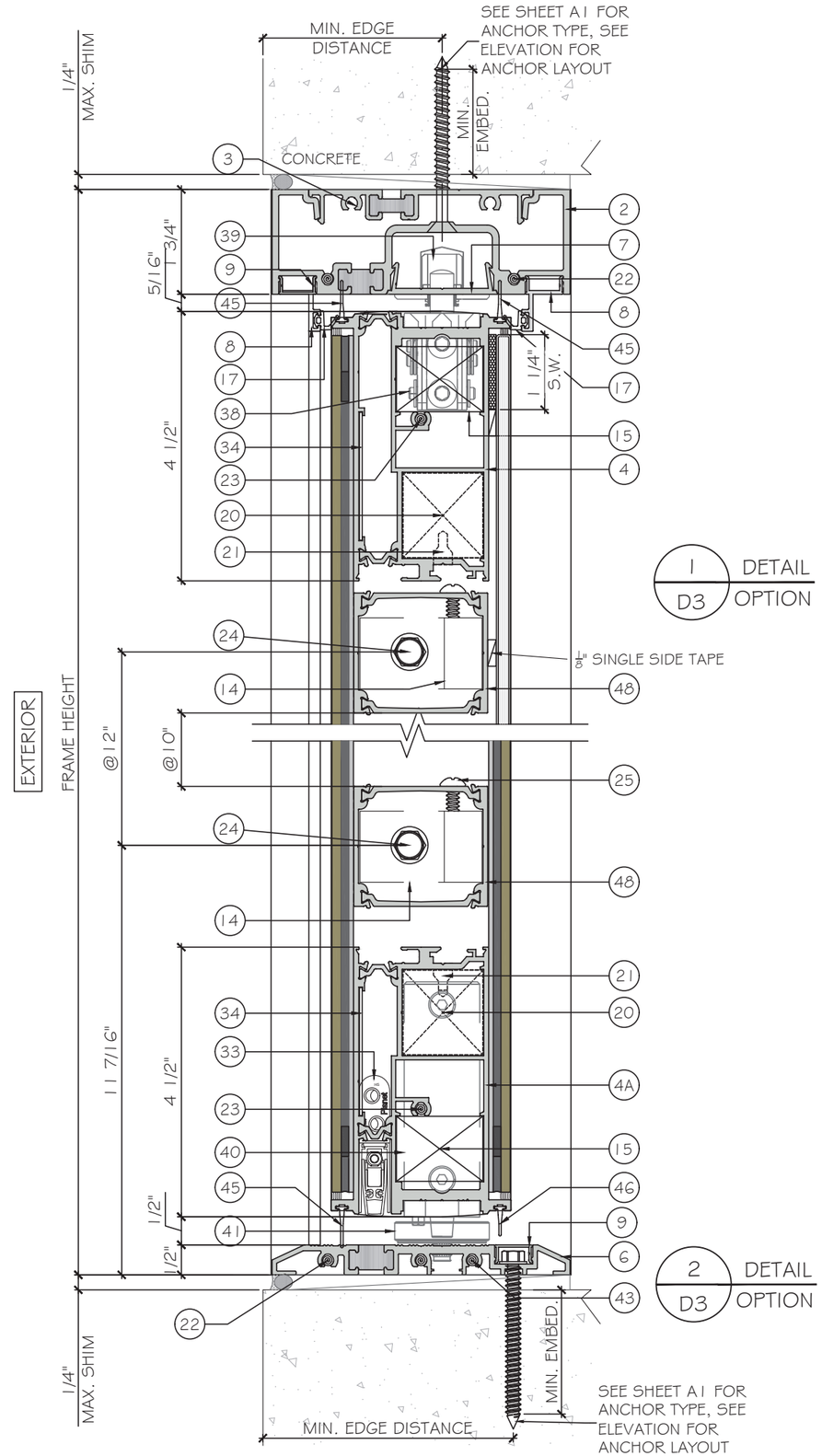

FLORIDA APPROVAL:

FL # 41358.1

YIPING WANG, P.E.
FLORIDA REGISTRATION
#55983
C.A.N. 28677

YIPING WANG, P.E.
LICENSE
No 55983
STATE OF FLORIDA
PROFESSIONAL ENGINEER

February 26th, 2025

MCY ENGINEERING, INC.
GLAZING CONSULTANTS
12781 MIRAMAR PARKWAY #301
MIRAMARI, FL. 33027
P: 305 271 0117
www.MCYEngineering.com
mcy@mcyengineering.com

ES-PSD5030T PIVOT DOOR - L.M.I.

E.S. WINDOWS, INC.
10653 NE QUAYBRIDGE CT.
MIAMI, FL33138
TEL.(305) 624-7775

Rev. No.	Date	Drawn By	Description
R5	02.26.2025	James	REVISION

Drawn Date 02.26.2025

Drawn By James

DRAWING NO.

AD22-07

D3

Sheet No.

7 OF 12

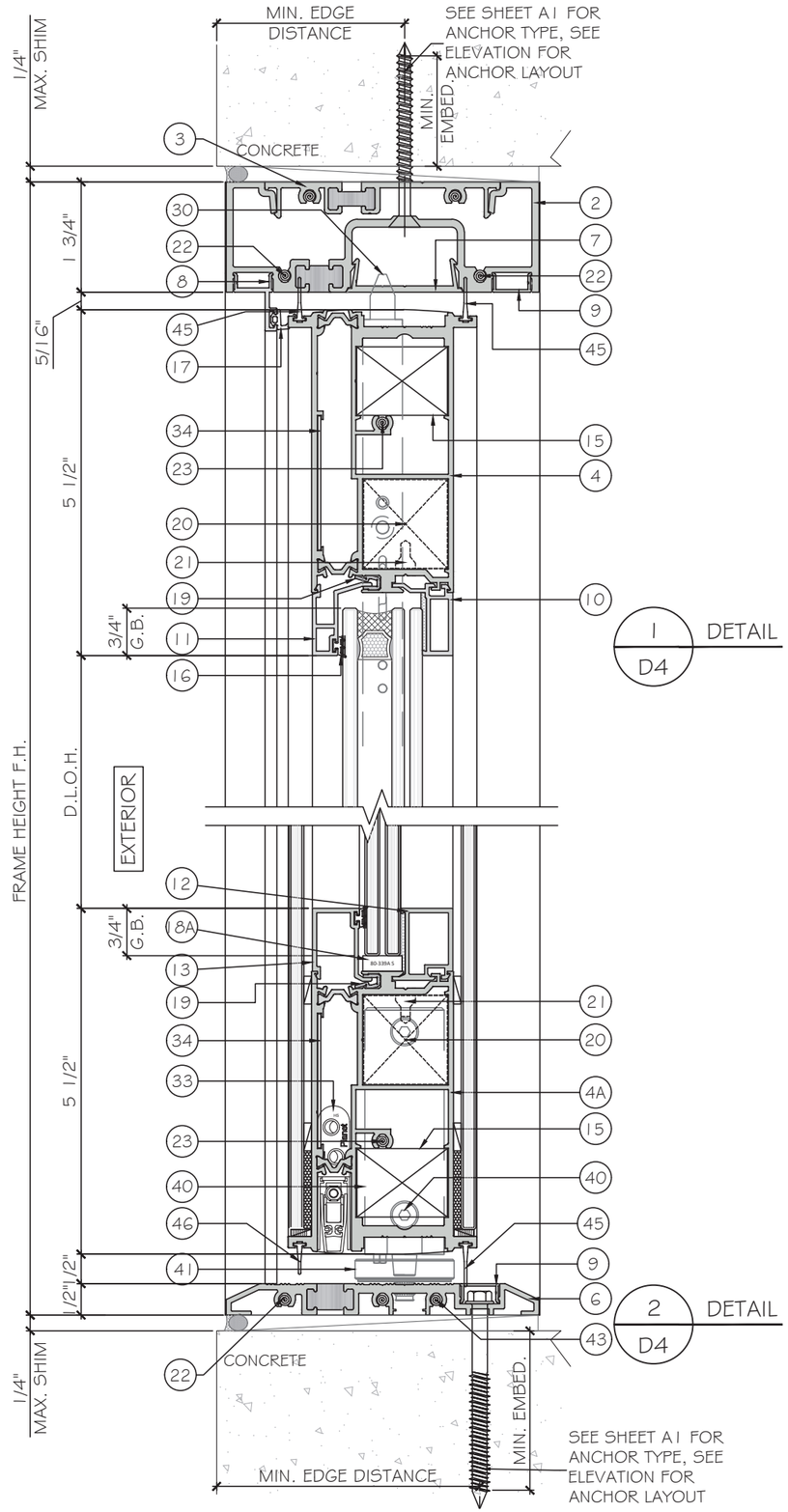

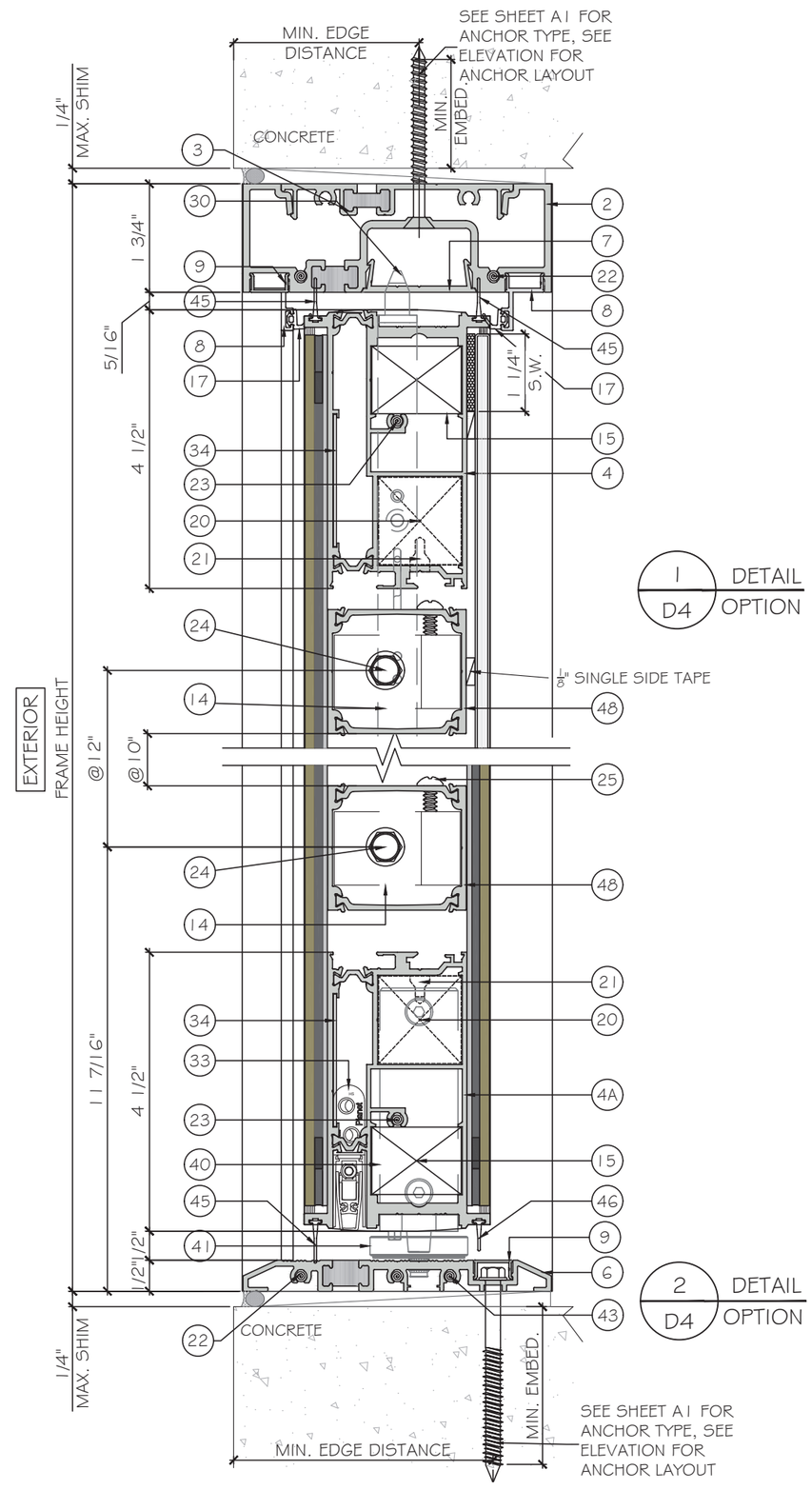

FLORIDA APPROVAL:

FL # 41358.1

YIPING WANG, P.E.
FLORIDA REGISTRATION
55983
C.A.N. 28677

YIPING WANG, P.E.
FLORIDA REGISTRATION
55983
C.A.N. 28677
STATE OF FLORIDA
PROFESSIONAL ENGINEER

February 26th, 2025

MCY ENGINEERING, INC.
GLAZING CONSULTANTS
12781 MIRAMAR PARKWAY #301
MIRAMARI, FL. 33027
P: 305 271 0117
www.MCYEngineering.com
mcy@mcyengineering.com

ES-PSD5030T PIVOT DOOR - L.M.I.

E.S. WINDOWS, INC.
10653 NE QUAYBRIDGE CT.
MIAMI, FL33138
TEL.(305) 624-7775

Rev. No.	Date	Drawn By	Description
R5	02.26.2025	James	REVISION

Drawn Date	Drawn By
02.26.2025	James

DRAWING NO.
AD22-07

D4

Sheet No.
8 OF 12

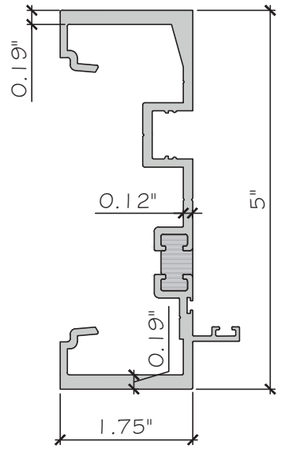

1 FRAME JAMB
ES-PSD5030T-001T
ALUM.6005-T5

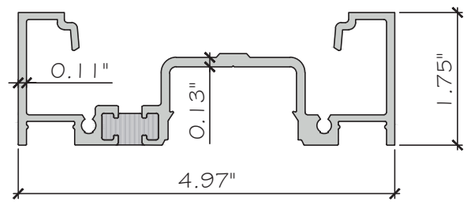

2 FRAME HEAD
ES-PSD5030T-002T
ALUM.6005-T5

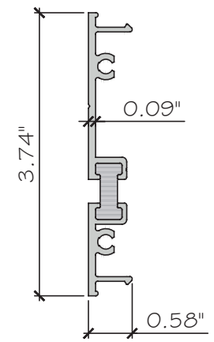

3 SHEAR CLIP
ES-8000T-003T
ALUM.6063-T6

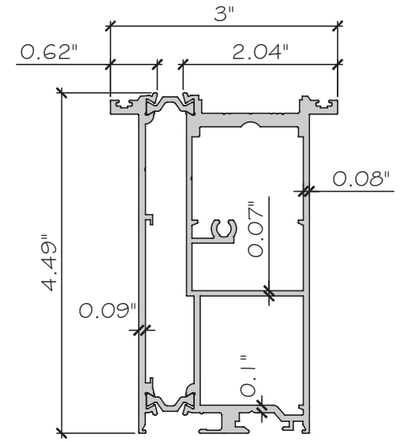

4 LEAF TOP 029 FRONT + 008 BACK
ES-PSD5030T-502
ALUM.6063-T6

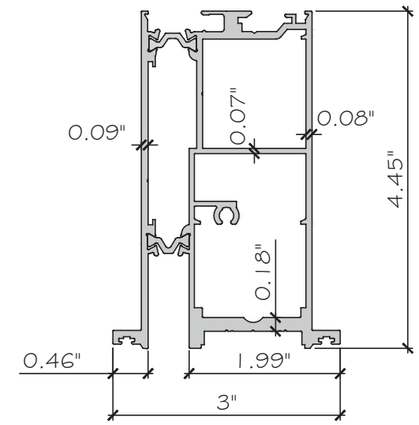

4A LEAF BOTTOM 009 FRONT + 010 BACK
ES-PSD5030T-503
ALUM.6063-T6

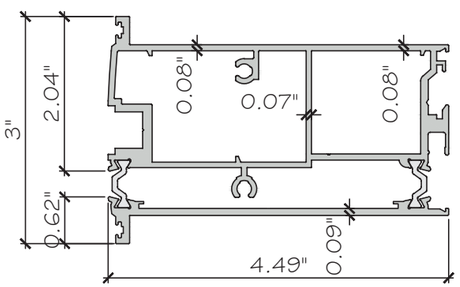

5 LEAF STILE 006 FRONT + 007 BACK
ES-PSD5030T-501
ALUM.6063-T6

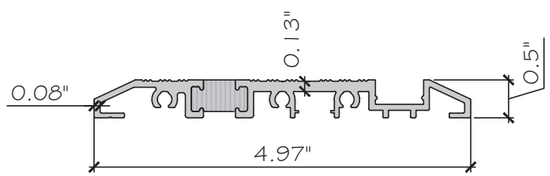

6 THRESHOLD
ES-PSD5030T-005T
ALUM.6063-T6

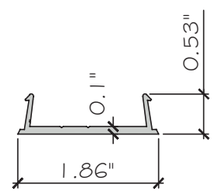

7 HEAD COVER
ES-PSD5030T-003
ALUM.6063-T5

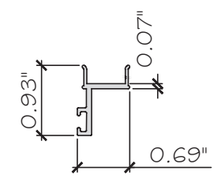

8 DOOR STOP
ES-PSD5030T-004
ALUM.6063-T5

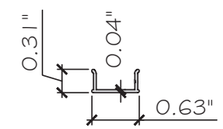

9 JAMB SCREW COVER
ES-EL114
ALUM.6063-T6

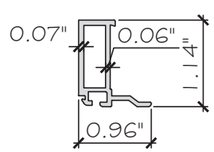

10 INTERIOR GLASS STOP
ES-PSD5030T-012
ALUM.6063-T5

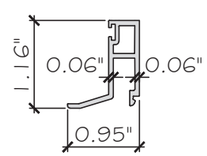

11 EXTERIOR GLASS STOP
ES-PSD5030T-011
ALUM.6063-T5

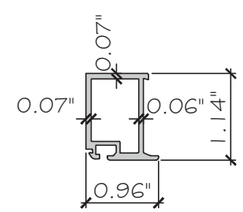

12 INTERIOR GLASS STOP
ES-PSD5030T-016
ALUM.6063-T5

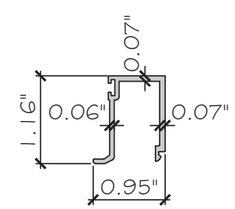

13 EXTERIOR GLASS STOP
ES-PSD5030T-015
ALUM.6063-T5

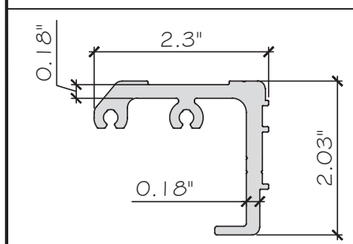

14 SHEAR BLOCK
ES-PSD5030T-017
ALUM.6063-T5

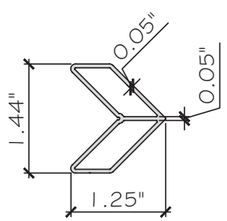

15 CORNER KEY
ES-45T-011
ALUM.6063-T5

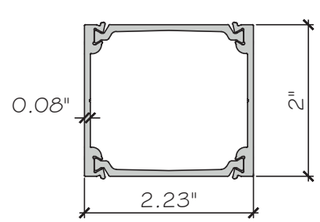

48 INTERMEDIATE PANELS
020 FRONT + 020 BACK
ES-PSD5030T-504
ALUM.6063-T6

FLORIDA APPROVAL:
FL # 41358.1

YIPING WANG
FLORIDA REGISTRATION
LICENSE #55983
C.A.N. 28677
STATE OF FLORIDA PROFESSIONAL ENGINEER
No 55983
February 26th, 2025

MCY ENGINEERING, INC.
GLAZING CONSULTANTS
12781 MIRAMAR PARKWAY #301
MIRAMAR, FL 33027
P: 305 271 0117
www.MCYEngineering.com mcy@mcyengineering.com

ES-PSD5030T PIVOT DOOR - L.M.I.

E.S. WINDOWS, INC.
10653 NE QUAYBRIDGE CT.
MIAMI, FL33138
TEL.(305) 624-7775

Rev. No.	Date	Drawn By	REVISION	Description
R5	02.26.2025	James		

Drawn Date 02.26.2025
Drawn By James

DRAWING NO.
AD22-07

PART

Sheet No.
9 OF 12

BILL OF MATERIALS

ITEM	PART	DESCRIPTION	MATERIAL	NOTE
1	ES-PSD5030T-001T	FRAME JAMB	ALUM.6005-T5	--
2	ES-PSD5030T-002T	FRAME HEAD	ALUM.6005-T5	--
3	ES-8000T-003T	SHEAR CLIP	ALUM.6063-T6	--
4	ES-PSD5030T-502	LEAF TOP 029 FRONT + 008 BACK	ALUM.6063-T6	--
4A	ES-PSD5030T-503	LEAF BOTTOM 009 FRONT + 010 BACK	ALUM.6063-T6	--
5	ES-PSD5030T-501	LEAF STILE 006 FRONT + 007 BACK	ALUM.6063-T6	--
6	ES-PSD5030T-005T	THRESHOLD	ALUM.6063-T6	--
7	ES-PSD5030T-003	HEAD COVER	ALUM.6063-T5	--
8	ES-PSD5030T-004	DOOR STOP	ALUM.6063-T5	--
9	ES-EL114	JAMB SCREW COVER	ALUM.6063-T6	--
10	ES-PSD5030T-012	INTERIOR GLASS STOP	ALUM.6063-T5	--
11	ES-PSD5030T-011	EXTERIOR GLASS STOP	ALUM.6063-T5	--
12	ES-PSD5030T-016	INTERIOR GLASS STOP	ALUM.6063-T5	--
13	ES-PSD5030T-015	EXTERIOR GLASS STOP	ALUM.6063-T5	--
14	ES-PSD5030T-017	SHEAR BLOCK	ALUM.6063-T5	--
15	ES-45T-011	CORNER KEY	ALUM.6063-T5	--
16	EMP-768 ES-EL100-G02A	GLAZING GASKET	SILICONE	--
17	EMP-501 ES-EL300-G01 E	SEAL GASKET	EPDM	--
18	EMP-471 ES-7530-B02A S	INSULATED LAMINATED SETTING BLOCK, 80±5SHORE A	SILICONE	--
18A	EMP-682 80-339A S	LAMINATED SETTING BLOCK, 80±5SHORE A	SILICONE	--
19	ES-UN8030-301	ISOLATOR	RIGID PVC	--
20	5039/50 CORNER JOINT	ESCUADRA DE ENSAMBLE	ALUMINUM	--
21	VILM5X14_D8	CORNER SCREW (5039/50)	STAINLESS STEEL	--
22	TOR #12 X 1" PAN NATURAL INOX	FRAME ASSEMBLY SCREW	STAINLESS STEEL	--
23	TOR #12 X 2" PHIL FLAT TYPE A 18-8SS	LEAF ASSEMBLY SCREW	STAINLESS STEEL	--
24	TOR #14 x 3/4" HWH TYPE AB	SCREW FOR SHEAR BLOCK	STAINLESS STEEL	--
25	TOR #12 X 3/4" PH	SCREW FOR SHEAR BLOCK INTERMEDIATE (PANELEX)	STAINLESS STEEL	--
26	#12 X 2 1/2" F.H.	SCREW FOR LEAF ASSEMBLY TOP/ BOTTOM	STAINLESS STEEL	--
27	#14 X 3 1/4" HWH (390) ELCO	SCREW FOR INSTALLATION JAMB/SILL	STAINLESS STEEL	--
28	3479715 - LSB 8050-752 - LEFT	STRIKER	STAINLESS STEEL	COMPONENTS OF HARDWARE OPTION 1.
29	3478750 - FSB 3630-03-24Q/41 KEEPER	STRIKER	STAINLESS STEEL	COMPONENTS OF HARDWARE OPTION 1 & 2.
30	3145903 - 7029 SHOOTBOLT	SHOOTBOLT BOTTOM	STAINLESS STEEL	COMPONENTS OF HARDWARE OPTION 1.
31	DL01-6259-* CYLINDER 40/10 TURN BR	CYLINDER 40/10	BRASS	
32	3492553 - AS2600 MULTIPONT LOCK	LOCK	STAINLESS STEEL	
33	PLANET HS DROP SEAL	DROP SEAL	STAINLESS STEEL	
34	ESC-004 ES-PSD5030T-E01	ESC-004 ES-PSD5030T-E01	-	COMPONENTS OF HARDWARE OPTION 1 & 2.
35	PS01-6208-* ROSE COVER	COVER CYLINDER	STAINLESS STEEL	
36	DL01-6253-* CYLINDER 40/40 TURN/KEY	CYLINDER	BRASS	
37	SHPRO316OLPNS601250 DOOR THICK 2 1/4"	PULL-PULL	AISI 316 STAINLESS STEEL	COMPONENTS OF HARDWARE OPTION 1.
38	600532*- SYSTEM M32	TOP PIVOT	STAINLESS STEEL	
39		CEILING PLATE	STAINLESS STEEL	
40		SYSTEM M	STAINLESS STEEL	
41		FLOOR PLATE	STAINLESS STEEL	

FLORIDA APPROVAL:

FL # 41358.1

YIPING WANG
FLORIDA REGISTRATION
P.E. No. 55883
C.A.N. 28677
STATE OF FLORIDA PROFESSIONAL ENGINEER

February 26th, 2025

MCY ENGINEERING, INC.
GLAZING CONSULTANTS
12781 MIRAMAR PARKWAY #301
MIRAMAR, FL 33027
P: 305 271 0117
www.MCYEngineering.com mcy@mcyengineering.com

ES-PSD5030T PIVOT DOOR - L.M.I.

E.S. WINDOWS, INC.
10653 NE QUAYBRIDGE CT.
MIAMI, FL33138
TEL.(305) 624-7775

Rev. No.	Date	Drawn By	REVISION	Description
R5	02.26.2025	James		

Drawn Date	Drawn By
02.26.2025	James

DRAWING NO.

AD22-07

BOM

Sheet No.

10 OF 12

BILL OF MATERIALS

ITEM	PART	DESCRIPTION	MATERIAL	NOTE
42	600101/B11 - SYSTEM ONE - SS	SYSTEM ONE HINGE SYSTEM KIT	STAINLESS STEEL	COMPONENTS OF HARDWARE OPTION 1.
43	TOR #12 x 1 1/2" P.H. S.M.S. ST/ST	FOR ASSEMBLY (ES-8000 FRAME)	STAINLESS STEEL	--
44	DL01-6200-* CYLIND 45/45 TURN/KEY BR	CYLIND 45/45 FOR PANELEX	BRASS	COMPONENTS OF HARDWARE OPTION 1.
45	ES-PSD5030T-G02 S	BOTTOM AND TOP GASKET	POLYPROPYLENE	--
46	ES-PSD5030T-G01 S	BOTTOM AND STILE GASKET	POLYPROPYLENE	--
47	CILINDRO 45/10 SOLO BOTON 820945109	CYLIND 45/10 FOR PANELEX	BRASS	COMPONENTS OF HARDWARE OPTION 1.
48	ES-PSD5030T-504	INTERMEDIATE PANELS 020 FRONT + 020 BACK	ALUM.6063-T6	--
49	900920 - PIVOT DOOR ACCESORY	PIVOT DOOR ACCESORY	-	--
50	DC-983	STRUCTURAL SEALANT	SILICONE	--
51	-	1/8" THK SETTING BLOCK @ G3, 80±5SHORE A	SILICONE	--
52	ES-PSD5030T-G01M S	EMP-832 SL ES-PSD-5030T G01M S	SILICONE	--
53	DS01-5000-PIVOT DOOR ACCESORY 13MM PROFILE	PIVOT DOOR ACCESORY	-	--
54	#10 x 1/2" F.H.	FOR KEEPER JAMB.	STAINLESS STEEL	--
55	#8 X 1" PHIL FLAT TYPE	FOR LOCK	STAINLESS STEEL	--
56	#12-24 X 1/2" FH SCREW.	FOR 60° LEAF.	STAINLESS STEEL	--
57	5700575 BS2600SA TOXF16K55928MLR41B001H1	LOCK	STAINLESS STEEL	COMPONENTS OF HARDWARE OPTION 2.
58	ES-PSD5030T-C02	LATCH LOCK HOLE COVER	POLYPROPYLENE	
59	DL01-6259-* CYLINDER 40/10 TURN BR1	CYLINDER 40/10	BRASS	
60	PLA-014 ES-PSD5030T-PLA03	DAYLATCH STRIKER PLATE	STAINLESS STEEL	
61	DS01-6707	PLANET DROP SEAL	STAINLESS STEEL	
62	COV-018 ES-PSD5030-C01-L	COVER DOOR STOP	STAINLESS STEEL	
63	ES-PSD5030T-PLA02	PLATE	STAINLESS STEEL	
64	SYSTEM ST.ONE.70.GSSS	TOP PIVOT	STAINLESS STEEL	
65		CEILING PLATE	STAINLESS STEEL	
66		SYSTEM	STAINLESS STEEL	
67		FLOOR PLATE	STAINLESS STEEL	
68	6607K1 STEEL HEX BAR	1*PUERA	STAINLESS STEEL	
69	34931188-115	DAYLATCH	BRASS	
70	3516185 DZM T-STANGE 75-BV1680-G2/45	ROD-EXTENSION	STAINLESS STEEL	
71	3512312	SHOOTBOLT BOTTOM	STAINLESS STEEL	
72	B7033 TV F16 50351938I OK OR41 BLK 500MM	EXTENSION ROD	STAINLESS STEEL	
73	5700952 BV16001TV XF 16S 500K OR41 180 1	HOOK	STAINLESS STEEL	
74	BS2600SA	5700575 BS2600SA TOXF16K55928MLR41B001H1	STAINLESS STEEL	
75	881-00088	3466977 - 881-00088 FLOOR KEEPER	STAINLESS STEEL	
76	MK22LS-1802	MK22LS-1802 A=2134 mm B=1524 SS316 Satin	STAINLESS STEEL	

FLORIDA APPROVAL:

FL # 41358.1

YIPING WANG, P.E.
FLORIDA REGISTRATION
LICENSE #55983
C.A.N. 28977

STATE OF FLORIDA PROFESSIONAL ENGINEER No 55983

February 26th, 2025

MCY ENGINEERING, INC.
GLAZING CONSULTANTS
12781 MIRAMAR PARKWAY #301
MIRAMAR, FL. 33027
P: 305 271 0117
www.MCYEngineering.com mcy@mcyengineering.com

ES-PSD5030T PIVOT DOOR - L.M.I.

E.S. WINDOWS, INC.
10653 NE QUAYBRIDGE CT.
MIAMI, FL33138
TEL.(305) 624-7775

Rev. No.	Date	Drawn By	Description
R5	02.26.2025	James	REVISION

Drawn Date 02.26.2025

Drawn By James

DRAWING NO.

AD22-07

BOM

Sheet No.

11 OF 12

LOCK SYSTEM

SIX SURFACE MOUNT METALLIC KEEPERS AT 19", 78", 101" FROM BOTTOM OF FRAME JAMB WITH (2) #8X3/4" FH SMS.
MULTI POINT LOCKING SYSTEM WITH KEY OPERATOR ON THE INTERIOR AT 44 3/4" FROM BOTTOM AT LEFT JAMB STILE WITH (1)#12X1 1/2" FH MS.
MULTI POINT LOCKING SYSTEM WITH THUMB TURN OPERATOR ON THE INTERIOR AND KEY OPERATOR ON THE EXTERIOR AT 44 3/4" FROM BOTTOM AT RIGHT JAMB STILE WITH (1)#12X1 1/2" FH MS.

TWO SURFACE MOUNT METALLIC STRIKE PLATES AT 44 3/4" FROM BOTTOM AT LEFT AND RIGHT FRAME JAMBS.

THE LOCKING RODS PENETRATES 1/2" INTO FRAME HEAD AND THRESHOLD.

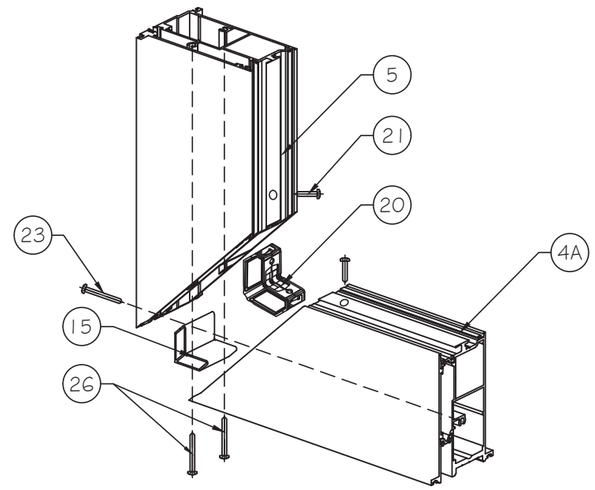

CORNER ASSEMBLY

FLORIDA APPROVAL:

FL # 41358.1

YIPING WANG, P.E.
FLORIDA REGISTRATION
L.C.A.N. 28677

YIPING WANG, P.E.
LICENSE
No 55983
STATE OF FLORIDA
PROFESSIONAL ENGINEER

February 26th, 2025

MCY ENGINEERING, INC.
GLAZING CONSULTANTS
12781 MIRAMAR PARKWAY #301
MIRAMARI, FL. 33027 P: 305 271 0117
www.MCYEngineering.com mcy@mcyengineering.com

ES-PSD5030T PIVOT DOOR - L.M.I.

E.S. WINDOWS, INC.
10653 NE QUAYBRIDGE CT.
MIAMI, FL33138
TEL.(305) 624-7775

Rev. No.	Date	Drawn By	Description
R5	02.26.2025	James	REVISION

Drawn Date	Drawn By
02.26.2025	James

DRAWING NO.
AD22-07

ASSEMBLY

Sheet No.
12 OF 12