RENAISSANCE WINDOWS AND DOORS

SERIES 8700 VINYL CASEMENT WINDOW

INSTALLATION ANCHORAGE DETAILS

GENERAL NOTES:

1. THIS PRODUCT HAS BEEN TESTED, EVALUATED AND DESIGNED TO THE DESIGN PRESSURE(S) STATED HEREIN IN ACCORDANCE WITH THE REQUIREMENTS OF THE CURRENT EDITION OF THE FLORIDA BUILDING CODE.
   1.1. PERFORMANCE STANDARDS USING IN TESTING:
      1.1.1. AAMA/WDMA/CSA 101/I.S.2/A440-22 (BY TESTING)
      1.1.2. AAMA/WDMA/CSA 101/I.S.2/A440-17 (BY EQUIVALENCY EVALUATION)

2. THE PRODUCT DETAILS CONTAINED HEREIN ARE BASED UPON SIGNED AND SEALED INTERTEK B&C REPORT NO. R0826.01-901-44 R0, DATED 09/19/24 AND ASSOCIATED LABORATORY DRAWINGS.

3. THIS PRODUCT EVALUATION DOCUMENT IS NOT FOR USE IN THE HIGH VELOCITY HURRICANE ZONE (HVHZ).

4. ADEQUACY OF THE EXISTING STRUCTURAL CONCRETE / MASONRY AND 2X FRAMING FRAMING SUBSTRATES AS A MAIN WIND FORCE RESISTING SYSTEM CAPABLE OF WITHSTANDING AND TRANSFERRING APPLIED PRODUCT LOADS TO THE FOUNDATION IS THE RESPONSIBILITY OF THE LICENSED PROFESSIONAL ENGINEER OR REGISTERED ARCHITECT ACTING AS THE DESIGN PROFESSIONAL OF RECORD FOR THE PROJECT OF INSTALLATION.

5. 1X AND 2X BUCKS (WHEN USED) SHALL BE DESIGNED AND ANCHORED TO PROPERLY TRANSFER ALL LOADS TO THE STRUCTURE. BUCK DESIGN AND INSTALLATION IS THE RESPONSIBILITY OF THE LICENSED PROFESSIONAL ENGINEER OR REGISTERED ARCHITECT ACTING AS THE DESIGN PROFESSIONAL OF RECORD FOR THE PROJECT OF INSTALLATION.

6. WHEN INSTALLED IN LOCATIONS WHERE WINDBORNE DEBRIS PROTECTION REQUIREMENTS EXIST,THIS PRODUCT REQUIRES OPENING PROTECTION IN ACCORDANCE WITH THE CURRENT EDITION OF THE FLORIDA BUILDING CODE USING AN APPROVED IMPACT PROTECTION DEVICE.

7. SITE CONDITIONS NOT COVERED IN THIS PRODUCT EVALUATION DOCUMENT ARE SUBJECT TO ADDITIONAL ENGINEERING ANALYSIS BY A LICENSED PROFESSIONAL ENGINEER OR REGISTERED ARCHITECT AS REQUIRED BY THE AUTHORITY HAVING JURISDICTION.

8. MATERIALS
   8.1. WINDOW FRAME MATERIAL: VINYL (PVC).

9. GLASS MEETS THE REQUIREMENTS OF ASTM E1300-16.

10. DESIGNATION "X" STANDS FOR OPERABLE PANEL.

11. INTERIOR AND EXTERIOR FINISHING AND SEALING ARE FOR ILLUSTRATIVE PURPOSES ONLY. THESE DRAWINGS CERTIFY THE WINDOW INSTALLATION ONLY IN SUPPORTING STRUCTURAL SUBSTRATE. WATER PROOFING OF THE INSTALLED WINDOW IS NOT PART OF THIS INSTALLATION CERTIFICATION. THAT IS THE RESPONSIBILITY OF THE MANUFACTURER AND/OR THE INSTALLER.

PERFORMANCE RATING			
MAXIMUM WINDOW SIZE	GLAZING DETAIL (SEE SHEET 8)	DESIGN PRESSURE (PSF)	IMPACT RATING
37" X 72"	A	+/- 55	NONE. SEE GENERAL NOTE 6.

INSTALLATION NOTES:

1. PRODUCT ANCHORS SHALL BE AS DESIGNATED AND LOCATED AS SHOWN IN THIS PRODUCT EVALUATION DOCUMENT. ANCHOR EMBEDMENT AND EDGE DISTANCE EXCLUDE WALL FINISHES, INCLUDING BUT NOT LIMITED TO STUCCO, FOAM, BRICK VENEER AND SIDING.

2. SEE INSTALLATION ANCHOR SCHEDULE ON SHEET 2 FOR TYPE AND GRADE OF ANCHOR, AND/OR MANUFACTURER'S ANCHOR SPECIFICATIONS, INCLUDING MINIMUM NOMINAL SIZE, MINIMUM EMBEDMENT INTO SUBSTRATE AND MINIMUM EDGE DISTANCES.
   2.1. EDGE DISTANCES SHALL BE MEASURED FROM CENTERLINE OF ANCHOR TO EDGE OF STRUCTURAL SUBSTRATE EITHER TO THE INTERIOR OR EXTERIOR OF THE FENESTRATION PRODUCT.
   2.2. MINIMUM EMBEDMENT SHALL BE BASED ON PENETRATION INTO MAIN WIND FORCE RESISTING SYSTEM SUBSTRATE.

3. SEE SHEETS 5 THROUGH 7 FOR SPECIFIC ANCHOR INSTALLATION DETAILS.

4. ONE (1) INSTALLATION ANCHOR IS REQUIRED AT EACH ANCHOR LOCATION.

5. ANCHOR QUANTITIES AND SPACING / EMBEDMENT AND EDGE DISTANCE
   5.1. THE NUMBER OF INSTALLATION ANCHORS IS BASED ON THE MAXIMUM DISTANCE FROM CORNER OF WINDOW AND THE MAXIMUM ON CENTER (O.C.) SPACING PLACEMENT OF ANCHORS IN ACCORDANCE WITH ELEVATIONS ON SHEETS 3 AND 4.
   5.2. DISTANCE FROM CORNER AND O.C. SPACING LESS THAN THAT SHOWN IN THE ELEVATIONS ON SHEETS 3 AND 4 ARE ACCEPTABLE.
   5.3. FOR WINDOW SIZES SMALLER THAN THOSE SHOWN, ANCHOR QUANTITIES CAN BE REDUCED WHILE MAINTAINING EDGE DISTANCE AND O.C. SPACING REQUIREMENTS.
   5.4. ANCHOR QUANTITIES AND SPACING SHOWN ARE BASED ON THE LOWER OF ANCHOR SPACING USED IN TESTING OR REQUIRED BY LOADING AT DESIGN PRESSURE.
   5.5. SEE EMBEDMENT AND EDGE DISTANCE DESCRIPTION ON SHEET 2.

6. MAXIMUM ALLOWABLE SHIM THICKNESS IS 1/4 INCH. SHIM WHERE SPACE OF 1/16 INCH OR GREATER OCCURS. SHIM(S) SHALL BE CONSTRUCTED OF WOOD COMPOSITE, HIGH DENSITY PLASTIC OR SIMILAR LOAD BEARING MATERIAL.

7. FOR CONCRETE BLOCK APPLICATIONS DO NOT INSTALL INSTALLATION ANCHORS INTO MORTAR JOINTS.

8. INSTALLATION ANCHORS SHALL BE INSTALLED IN ACCORDANCE WITH ANCHOR MANUFACTURER'S INSTALLATION INSTRUCTIONS AND ANCHORS SHALL NOT BE USED IN SUBSTRATES WITH STRENGTHS LESS THAN THE MINIMUM STRENGTH SPECIFIED IN THE INSTALLATION ANCHOR SCHEDULE ON SHEET 2.

TABLE OF CONTENTS

SHEET	SHEET DESCRIPTION
1	GENERAL NOTES, INSTALLATION NOTES, TABLE OF CONTENTS
2	ANCHOR SCHEDULE - EMBEDMENT AND EDGE DISTANCE
3	ELEVATION & NAILING FIN (FIN FRAME) ANCHORING LAYOUT
4	ELEVATION & THROUGH FRAME ANCHORING LAYOUT
5	NAILING FIN (FIN FRAME) SECTION VIEWS
6	THROUGH FRAME W/SNAP-ON FLANGE SECTION VIEWS
7	THROUGH FRAME SECTION VIEWS
8	GLAZING DETAIL AND GLAZING NOTES /BILL OR MATERIALS

RENAISSANCE WINDOWS AND DOORS
13340 INTERNATIONAL PARKWAY
JACKSONVILLE, FL 32218

SERIES 8700 VINYL CASEMENT WINDOW ANCHORAGE DETAILS

NO.	REVISION DESCRIPTION	BY	DATE

DATE: 10/7/2024	DWN BY: RJA	CHK BY: n/a	SCALE: NONE

ROBERT J. AMORUSO, P.E. #49752
AMORUSO CONSULTING ENG., LLC
FBPE REGISTRATION NO. 38327
226 N NOVA RD, NO. 142
ORMOND BEACH, FL 32174
RJAENGPE@GMAIL.COM

ROBERT JAMES AMORUSO LICENSE No 49752 STATE OF FLORIDA PROFESSIONAL ENGINEER

Digitally signed by Robert J Amoruso
Date: 2024.10.29 11:36:19 -04'00'

PROJECT#: ACE-2024-136

DWG/REV: RWD026, Rev A

INSTALLATION ANCHOR SCHEDULE

INSTALLATION TYPE	SECTION VIEW	FASTENER HEAD TYPE	FASTENER SIZE	SUBSTRATE	MANUFACTURER AND/OR SPECIFICATION	MIN. EMBEDMENT (IN)	MIN. EDGE DISTANCE (IN)	MIN. SPACING (IN) BETWEEN FRAME ANCHORS	ANCHOR CAPACITIES BASED ON
THROUGH FRAME ANCHOR	SECTION A & B (SHEET 7)	PAN OR HEX HEAD	3/16"	CONCRETE	ITW TAPCONS (1)	1	1-1/8	3	MIN. 2000 PSI CONCRETE
				MASONRY (BLOCK/CMU)	ITW TAPCONS (1)	1	2	3	STRENGTH CONFORMANCE TO ASTM C-90, MEDIUM WEIGHT
		PAN HEAD	No. 10	WOOD	ANSI B18.6.1 (WOOD SCREW) (2) GRADE 2 EQUIVALENT ASME B18.6.4 (TAPPING SCREW) (2) GRADE 2 EQUIVALENT	1-3/8	3/4	2 1/2	WOOD WITH A MINIMUM SPECIFIC GRAVITY OF 0.42.
SNAP-ON FLANGE WITH THROUGH FRAME ANCHOR	SECTION A & B (SHEET 6)	PAN HEAD	No. 10	WOOD	ANSI B18.6.1 (WOOD SCREW) (2) GRADE 2 EQUIVALENT ASME B18.6.4 (TAPPING SCREW) (2) GRADE 2 EQUIVALENT	1-3/8	3/4	2 1/2	WOOD WITH A MINIMUM SPECIFIC GRAVITY OF 0.42.
NAILING FIN ANCHOR	SECTION A & B (SHEET 5)	PAN HEAD	No. 8	WOOD	ANSI B18.6.1 (WOOD SCREW) (3) GRADE 2 EQUIVALENT ASME B18.6.4 (TAPPING SCREW) (3) GRADE 2 EQUIVALENT	1-5/8	1/4	1	WOOD WITH A MINIMUM SPECIFIC GRAVITY OF 0.42.

NOTES:

1) WHEN ITW TAPCONS ARE USED FOR CONCRETE/MASONRY INSTALLATION, THEY SHALL BE THE ADVANCED THREADFORM TECHNOLOGY TYPE.

2) FOR WOOD SCREW INSTALLATION INTO WOOD SUBSTRATE; IF SPLITTING IS A CONCERN, DRILL 0.090" PILOT HOLE (DRILL SIZE 43). FOR TAPPING SCREW INSTALLATION INTO WOOD SUBSTRATE; IF SPLITTING IS A CONCERN, DRILL 0.121" PILOT HOLE (DRILL SIZE 31).

3) FOR WOOD SCREW INSTALLATION INTO WOOD SUBSTRATE; IF SPLITTING IS A CONCERN, DRILL 0.082" PILOT HOLE (DRILL SIZE 45).

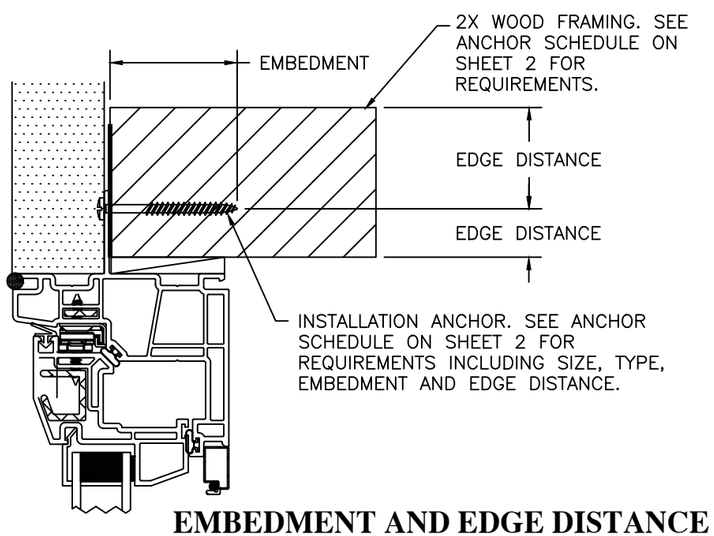

EMBEDMENT AND EDGE DISTANCE

NAILING FIN FRAME INSTALLATION

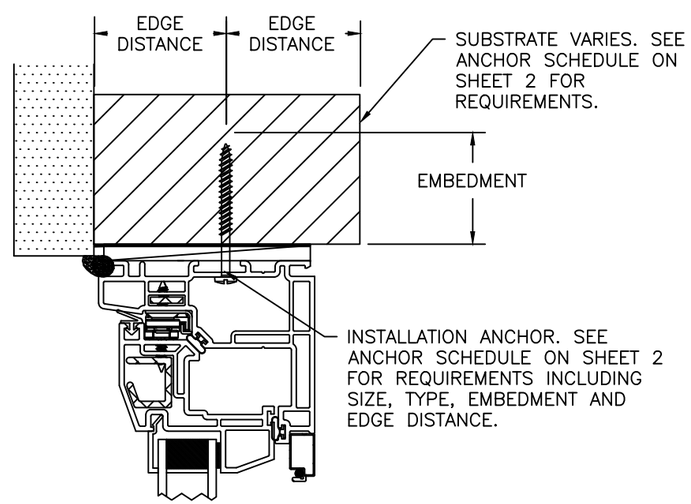

EMBEDMENT AND EDGE DISTANCE

THROUGH-FRAME INSTALLATION

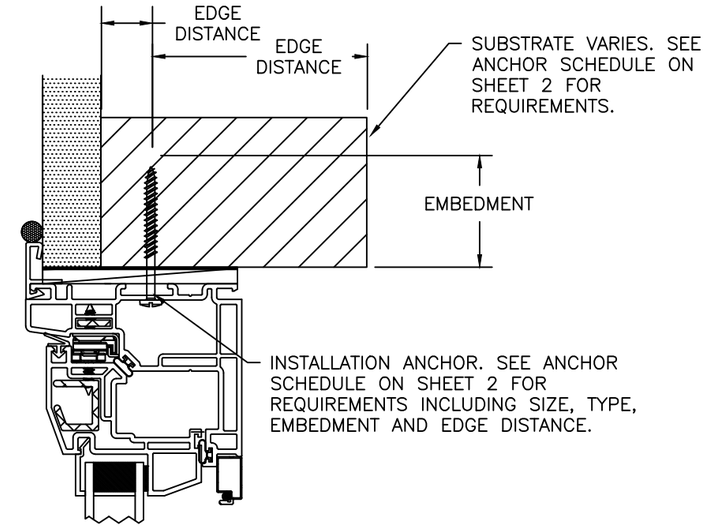

EMBEDMENT AND EDGE DISTANCE

SNAP-ON FLANGE THROUGH-FRAME INSTALLATION

RENAISSANCE WINDOWS AND DOORS
13340 INTERNATIONAL PARKWAY
JACKSONVILLE, FL 32218

SERIES 8700 VINYL CASEMENT WINDOW ANCHORAGE DETAILS

NO.	REVISION DESCRIPTION	BY	DATE

DATE: 10/7/2024 | DWN BY: RJA | CHK BY: n/a | SCALE: NONE

ROBERT J. AMORUSO, P.E. #49752
AMORUSO CONSULTING ENG., LLC
FBPE REGISTRATION NO. 38327
226 N NOVA RD, NO. 142
ORMOND BEACH, FL 32174
RJAENGPE@GMAIL.COM

ROBERT JAMES AMORUSO LICENSE No 49752 STATE OF FLORIDA PROFESSIONAL ENGINEER

Digitally signed by Robert J Amoruso
Date: 2024.10.29 11:36:50 -04'00'

PROJECT#: ACE-2024-136

DWG/REV: RWD026, Rev A

SERIES 8700 VINYL CASEMENT WINDOW
55 PSF DESIGN PRESSURE

EXTERIOR VIEW

37" X 72" NOMINAL SIZE - GLAZING DETAIL A

NAILING FINE (FIN FRAME) ANCHOR INSTALLATION

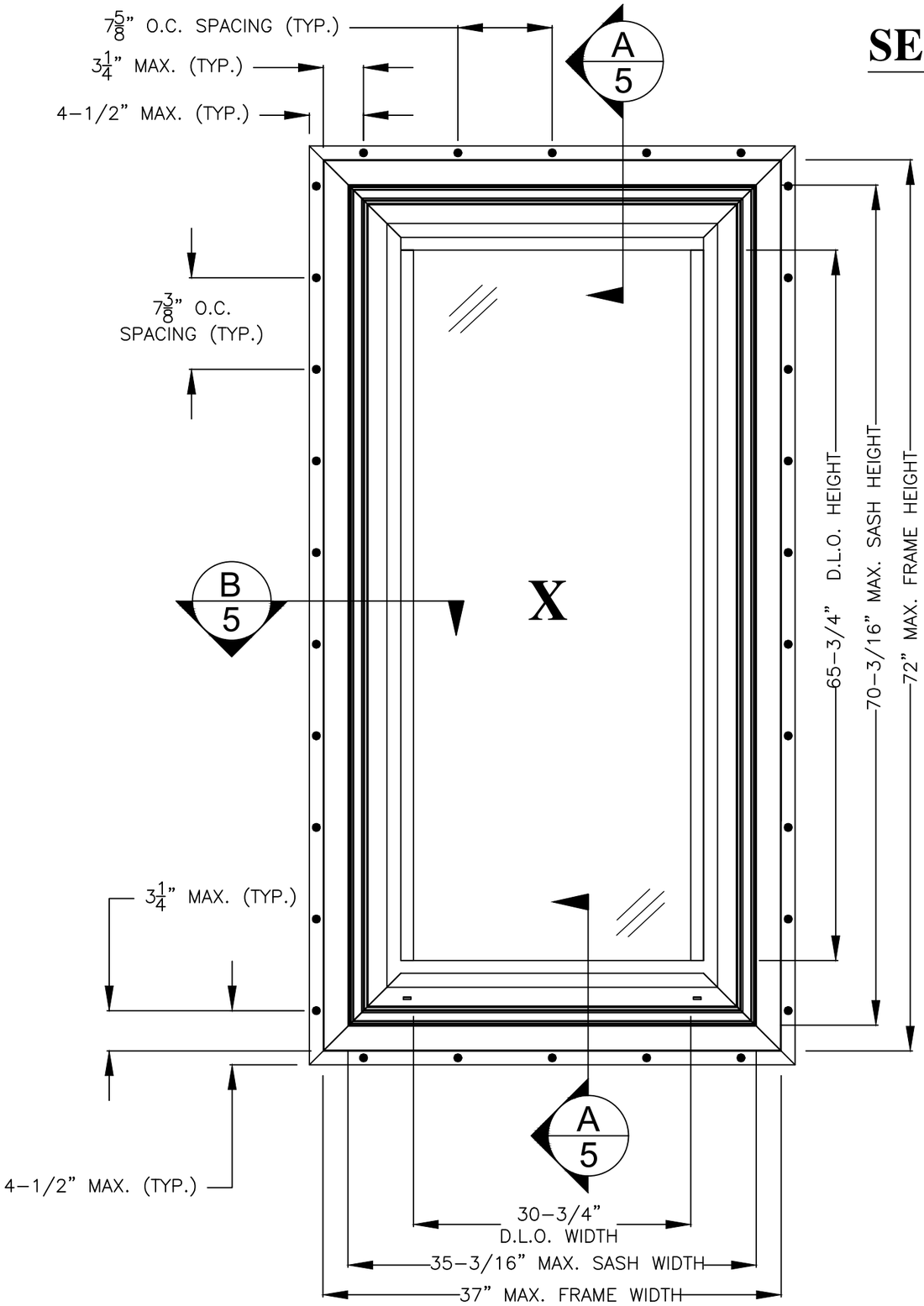

RENAISSANCE WINDOWS
AND DOORS
13340 INTERNATIONAL PARKWAY
JACKSONVILLE, FL 32218

SERIES 8700 VINYL CASEMENT WINDOW
ANCHORAGE DETAILS

NO.	REVISION DESCRIPTION	BY	DATE

DATE: 10/7/2024	DWN BY: RJA	CHK BY: n/a	SCALE: NONE

ROBERT J. AMORUSO, P.E. #49752
AMORUSO CONSULTING ENG., LLC
FBPE REGISTRATION NO. 38327
226 N NOVA RD, NO. 142
ORMOND BEACH, FL 32174
RJAENGPE@GMAIL.COM

ROBERT JAMES AMORUSO
LICENSE
No 49752
STATE OF
FLORIDA
PROFESSIONAL ENGINEER

Digitally signed by Robert J Amoruso
Date: 2024.10.29 11:36:59 -04'00'

PROJECT#: ACE-2024-136

DWG/REV: RWD026, Rev A

SERIES 8700 VINYL CASEMENT WINDOW

55 PSF DESIGN PRESSURE

EXTERIOR VIEW

37" X 72" NOMINAL SIZE - GLAZING DETAIL A

THROUGH-FRAME ANCHOR INSTALLATION

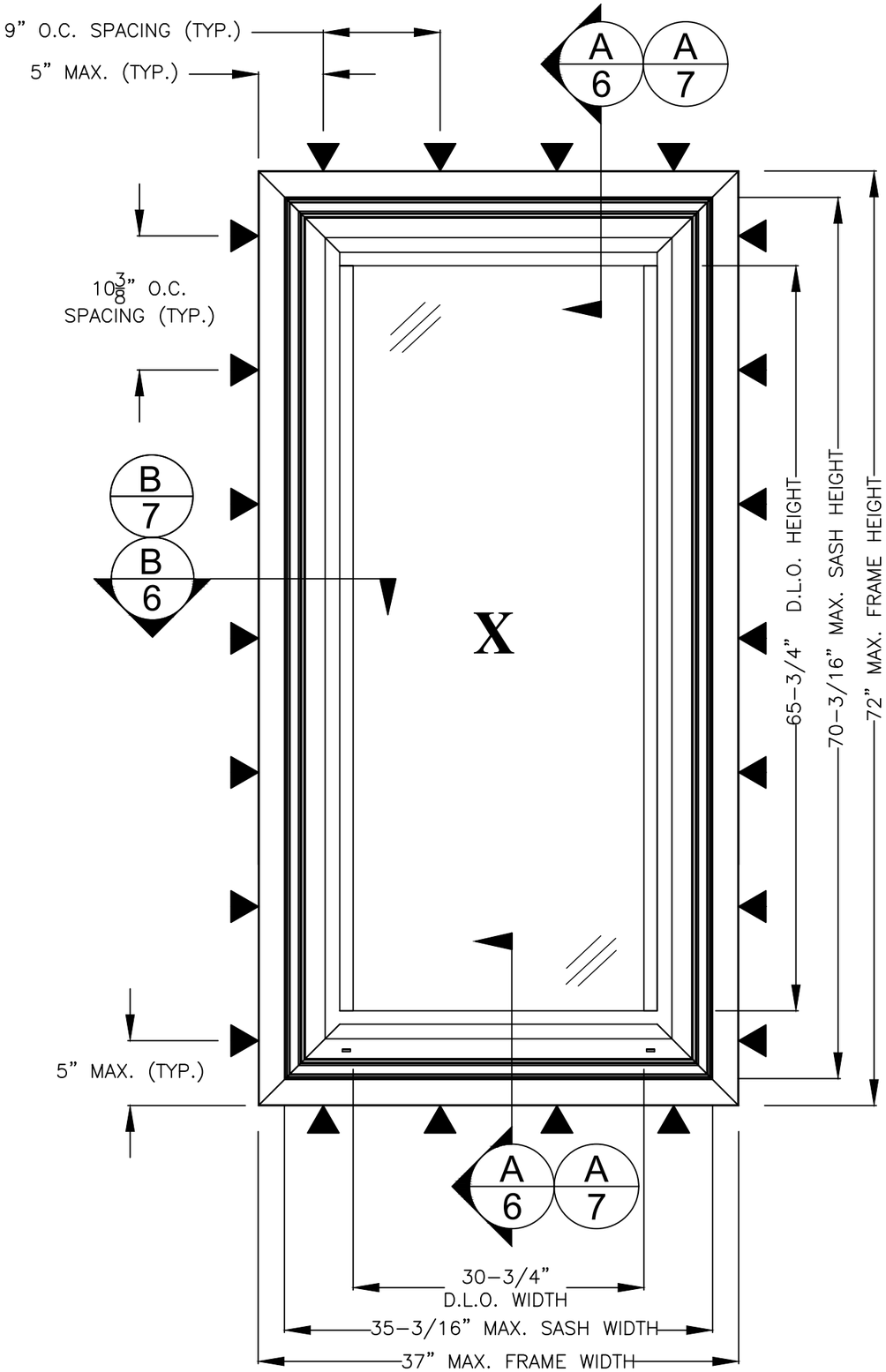

RENAISSANCE WINDOWS AND DOORS
13340 INTERNATIONAL PARKWAY
JACKSONVILLE, FL 32218

SERIES 8700 VINYL CASEMENT WINDOW ANCHORAGE DETAILS

NO.	REVISION DESCRIPTION	BY	DATE

DATE: 10/7/2024	DWN BY: RJA	CHK BY: n/a	SCALE: NONE

ROBERT J. AMORUSO, P.E. #49752
AMORUSO CONSULTING ENG., LLC
FBPE REGISTRATION NO. 38327
226 N NOVA RD, NO. 142
ORMOND BEACH, FL 32174
RJAENGPE@GMAIL.COM

ROBERT JAMES AMORUSO LICENSE No 49752 STATE OF FLORIDA PROFESSIONAL ENGINEER

Digitally signed by Robert J Amoruso
Date: 2024.10.29 11:37:10 -04'00'

PROJECT#: ACE-2024-136

DWG/REV: RWD026, Rev A

SHT: 4 of 8

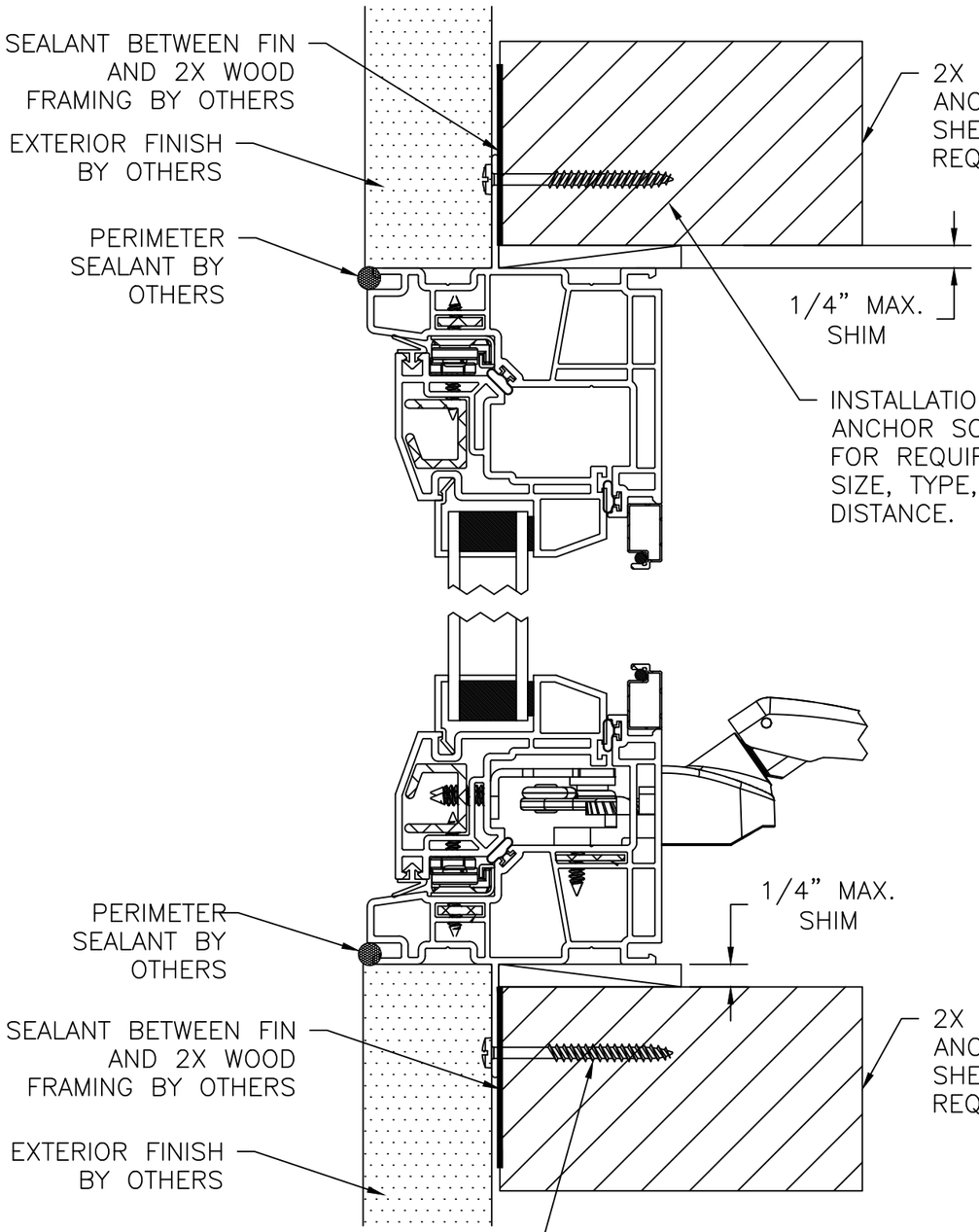

A / 5 **VERTICAL CROSS SECTION**

NAILING FIN FRAME INSTALLATION

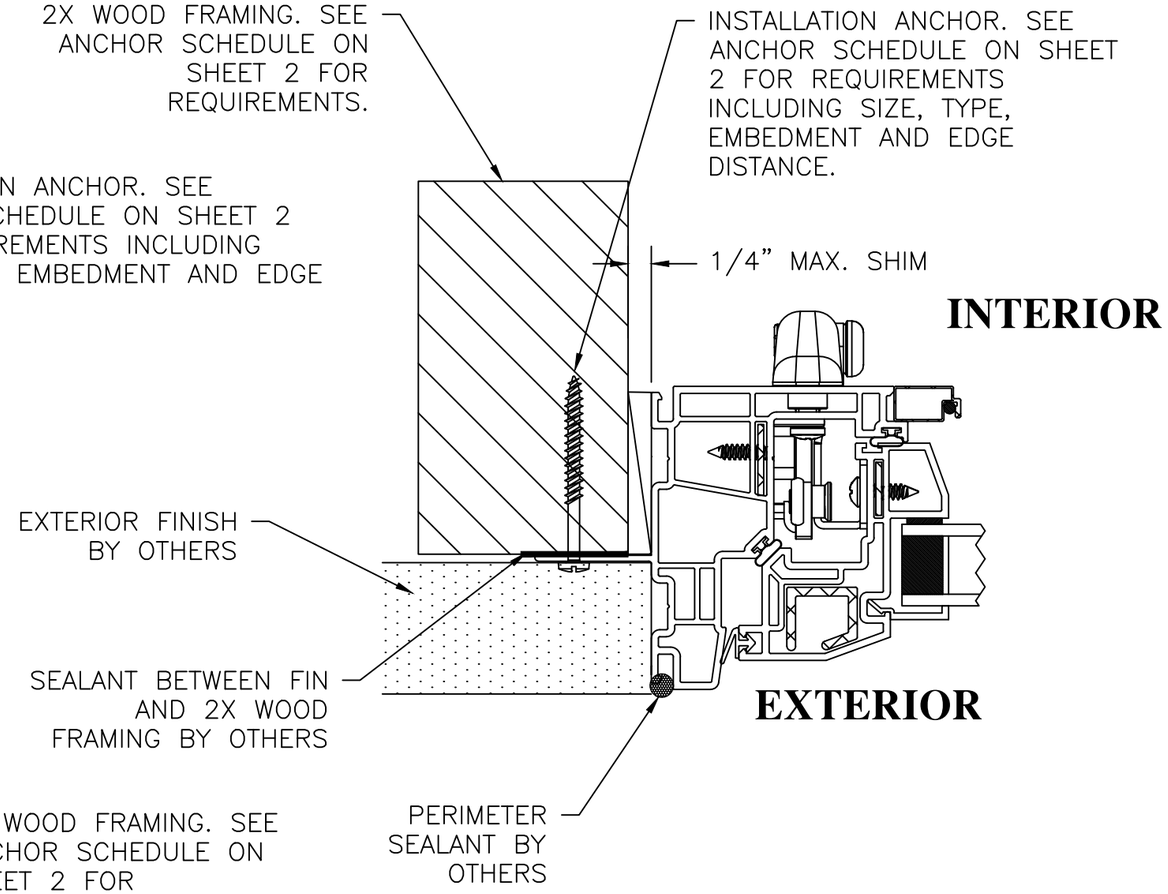

B / 5 **HORIZONTAL CROSS SECTION**

NAILING FIN FRAME INSTALLATION

RENAISSANCE WINDOWS AND DOORS
13340 INTERNATIONAL PARKWAY
JACKSONVILLE, FL 32218

SERIES 8700 VINYL CASEMENT WINDOW ANCHORAGE DETAILS

NO.	REVISION DESCRIPTION	BY	DATE

DATE: 10/7/2024	DWN BY: RJA	CHK BY: n/a	SCALE: NONE

ROBERT J. AMORUSO, P.E. #49752
AMORUSO CONSULTING ENG., LLC
FBPE REGISTRATION NO. 38327
226 N NOVA RD, NO. 142
ORMOND BEACH, FL 32174
RJAENGPE@GMAIL.COM

ROBERT JAMES AMORUSO LICENSE No 49752 STATE OF FLORIDA PROFESSIONAL ENGINEER

Digitally signed by Robert J Amoruso
Date: 2024.10.29 11:37:23 -04'00'

PROJECT#: ACE-2024-136

DWG/REV: RWD026, Rev A

SHT: 5 of 8

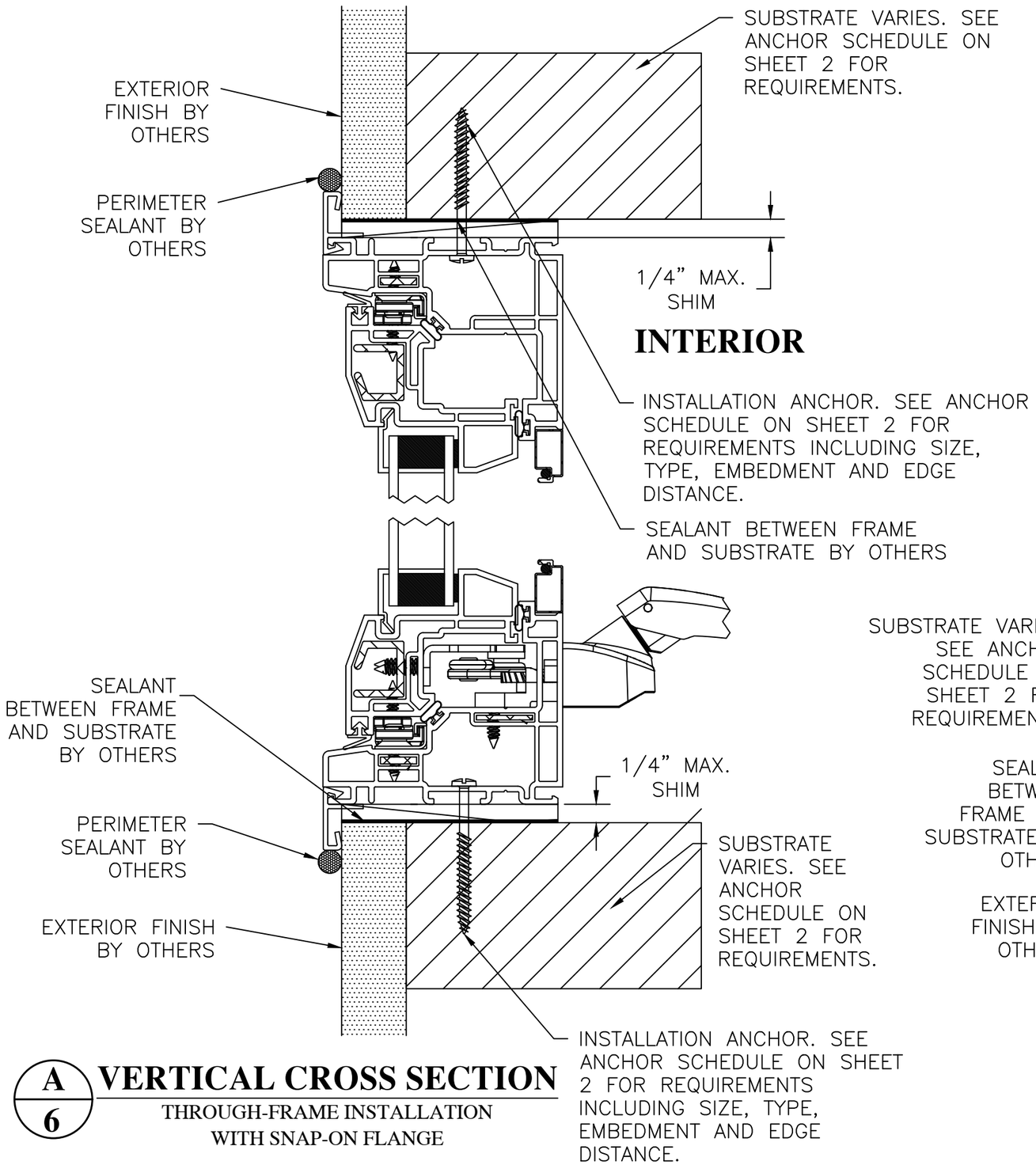

A / 6 **VERTICAL CROSS SECTION**

THROUGH-FRAME INSTALLATION WITH SNAP-ON FLANGE

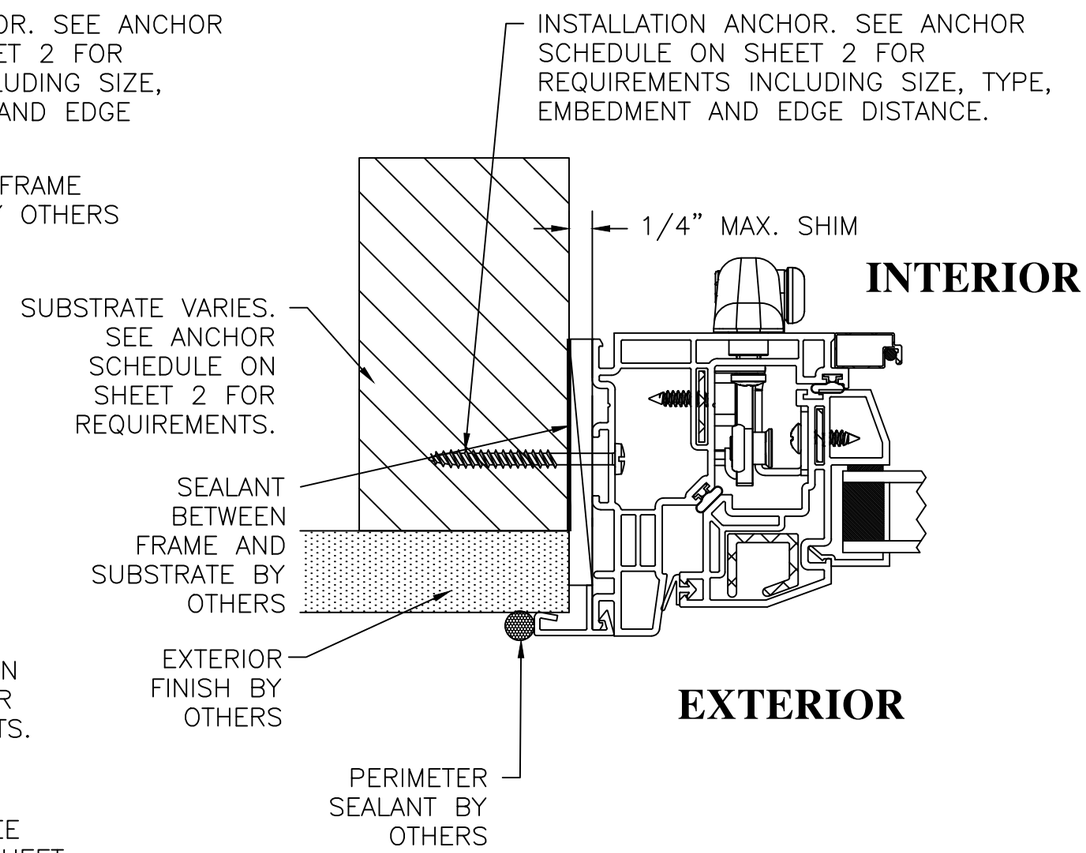

B / 6 **HORIZONTAL CROSS SECTION**

THROUGH-FRAME INSTALLATION WITH SNAP-ON FLANGE

RENAISSANCE WINDOWS AND DOORS
13340 INTERNATIONAL PARKWAY
JACKSONVILLE, FL 32218

SERIES 8700 VINYL CASEMENT WINDOW ANCHORAGE DETAILS

NO.	REVISION DESCRIPTION	BY	DATE

DATE: 10/7/2024	DWN BY: RJA	CHK BY: n/a	SCALE: NONE

ROBERT J. AMORUSO, P.E. #49752
AMORUSO CONSULTING ENG., LLC
FBPE REGISTRATION NO. 38327
226 N NOVA RD, NO. 142
ORMOND BEACH, FL 32174
RJAENGPE@GMAIL.COM

ROBERT JAMES AMORUSO LICENSE No 49752 STATE OF FLORIDA PROFESSIONAL ENGINEER

Digitally signed by Robert J Amoruso
Date: 2024.10.29 11:37:34 -04'00'

PROJECT#: ACE-2024-136

DWG/REV: RWD026, Rev A

SHT: 6 of 8

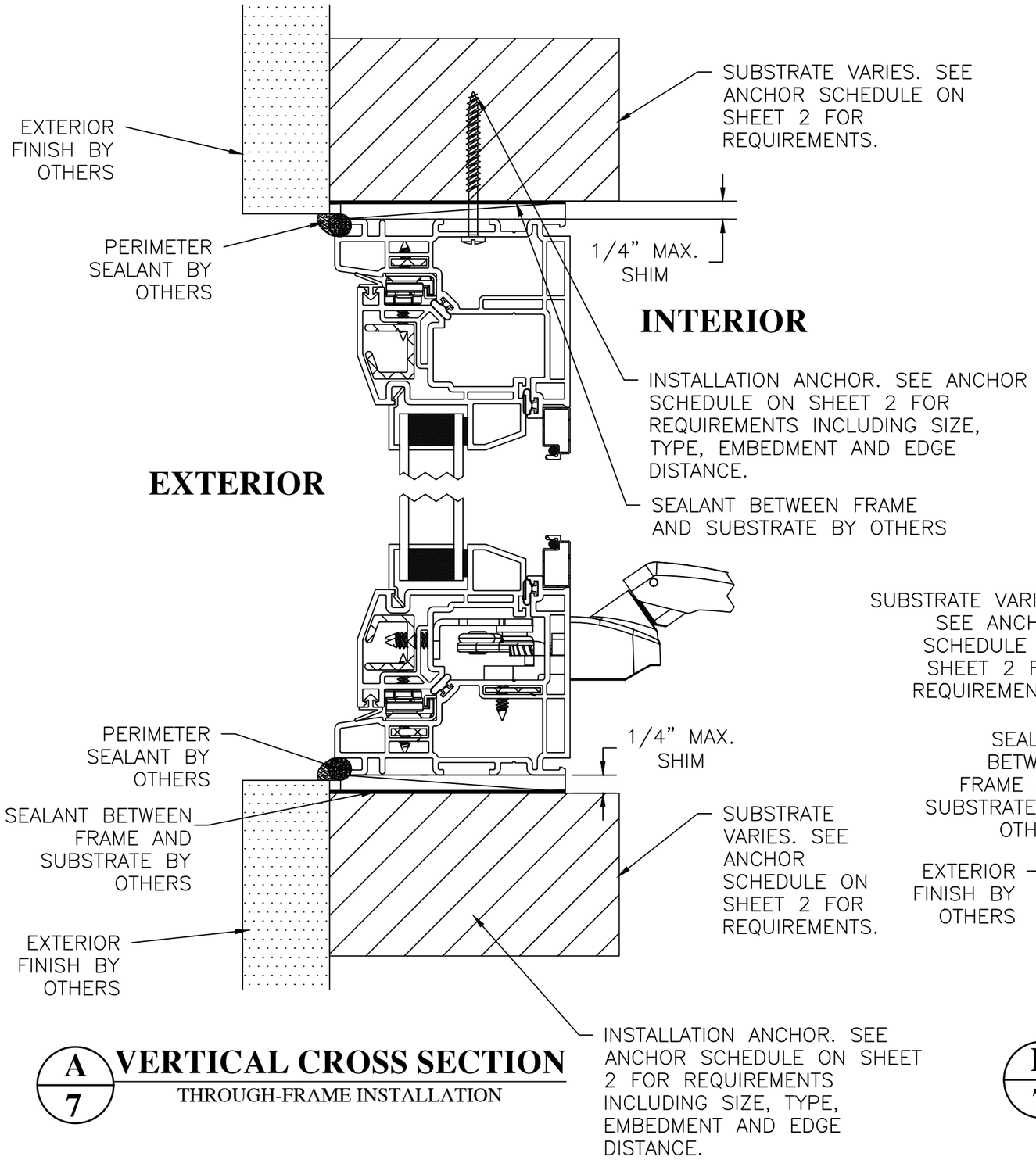

A / 7 **VERTICAL CROSS SECTION**

THROUGH-FRAME INSTALLATION

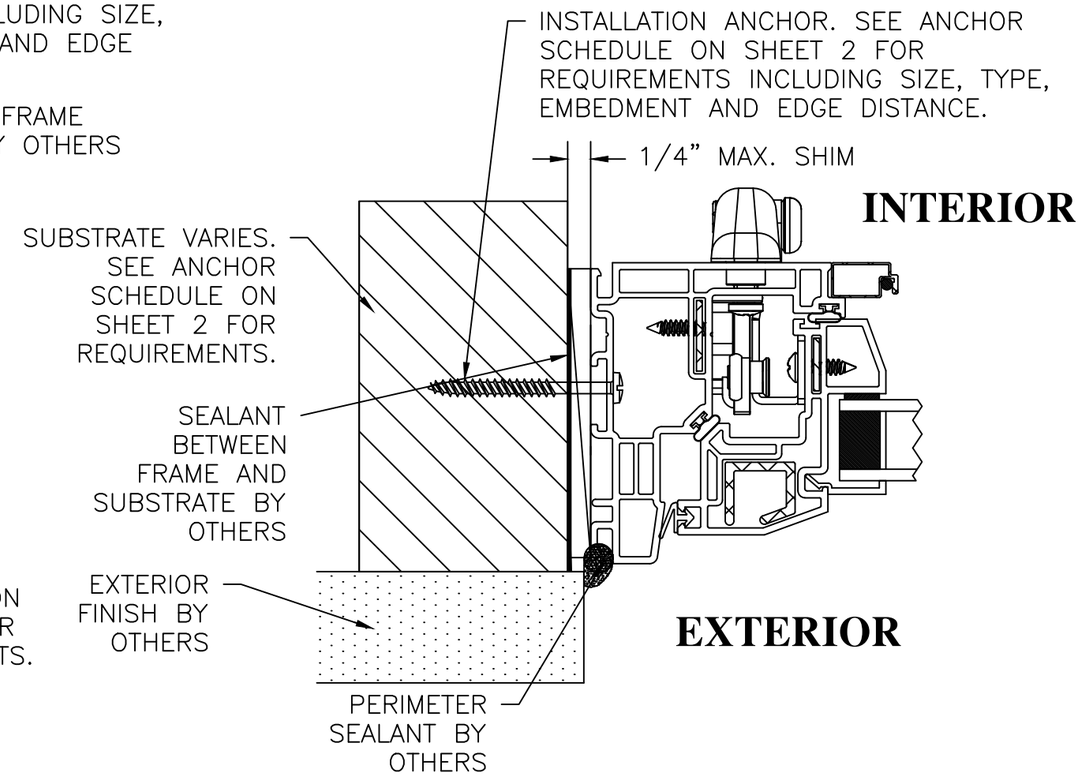

B / 7 **HORIZONTAL CROSS SECTION**

THROUGH-FRAME INSTALLATION

RENAISSANCE WINDOWS AND DOORS
13340 INTERNATIONAL PARKWAY
JACKSONVILLE, FL 32218

SERIES 8700 VINYL CASEMENT WINDOW ANCHORAGE DETAILS

NO.	REVISION DESCRIPTION	BY	DATE

DATE: 10/7/2024	DWN BY: RJA	CHK BY: n/a	SCALE: NONE

ROBERT J. AMORUSO, P.E. #49752
AMORUSO CONSULTING ENG., LLC
FBPE REGISTRATION NO. 38327
226 N NOVA RD, NO. 142
ORMOND BEACH, FL 32174
RJAENGPE@GMAIL.COM

ROBERT JAMES AMORUSO LICENSE No 49752 STATE OF FLORIDA PROFESSIONAL ENGINEER

Digitally signed by Robert J Amoruso
Date: 2024.10.29 11:37:47 -04'00'

PROJECT#: ACE-2024-136

DWG/REV: RWD026, Rev A

SHT: 7 of 8

GLAZING DETAIL A

GLAZING METHOD: Glazed from exterior, secured with silicone sealant or foam glazing tape and vinyl glazing bead.

Block Frame Shown,
Fin Frame applicable.

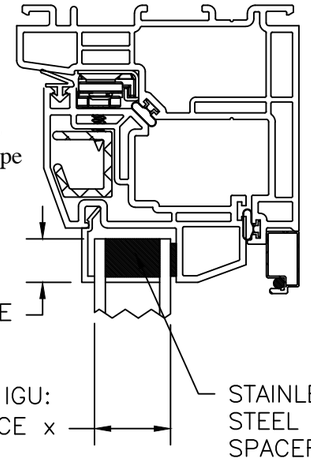

NOTES:

1. A MINIMUM OF TWO (2) NEOPRENE SETTING BLOCKS WITH 70 TO 90 SHORE A DUROMETER HARDNESS ARE REQUIRED AT BOTTOM (SILL) OF GLAZING LITES MORE THAN 3 FEET IN WIDTH.
2. AS-TESTED IGU SYSTEM SHOWN. SUBSTITUTIONS ARE ALLOWED IN ACCORDANCE WITH AAMA/WDMA/CSA 101/I.S. 2/A440-17, SECTIONS 10.2.3.3. SEE SHEET 1 FOR DETAILS RELATED TO WINDOW SIZE AND DESIGN PRESSURE.

BILL OF MATERIALS

PART NO.	DESCRIPTION	COMPANY	REMARKS
VINYL AND MISC. COMPONENTS			
10068	FRAME, NO NAIL FIN	MIKRON IND. INC.	
10775	FRAME, NAIL FIN	MIKRON IND. INC.	
7005	VENT	MIKRON IND. INC.	
5927	GLAZING BEAD 7/8" IG	MIKRON IND. INC.	
8483	GLAZING BEAD 3/4" IG	MIKRON IND. INC.	

RENAISSANCE WINDOWS
AND DOORS
13340 INTERNATIONAL PARKWAY
JACKSONVILLE, FL 32218

SERIES 8700 VINYL CASEMENT WINDOW
ANCHORAGE DETAILS

NO.	REVISION DESCRIPTION	BY	DATE

DATE: 10/7/2024 | DWN BY: RJA | CHK BY: n/a | SCALE: NONE

ROBERT J. AMORUSO, P.E. #49752
AMORUSO CONSULTING ENG., LLC
FBPE REGISTRATION NO. 38327
226 N NOVA RD, NO. 142
ORMOND BEACH, FL 32174
RJAENGPE@GMAIL.COM

Digitally signed by Robert J Amoruso
Date: 2024.10.29 11:37:58 -04'00'

PROJECT#: ACE-2024-136

DWG/REV: RWD026, Rev A

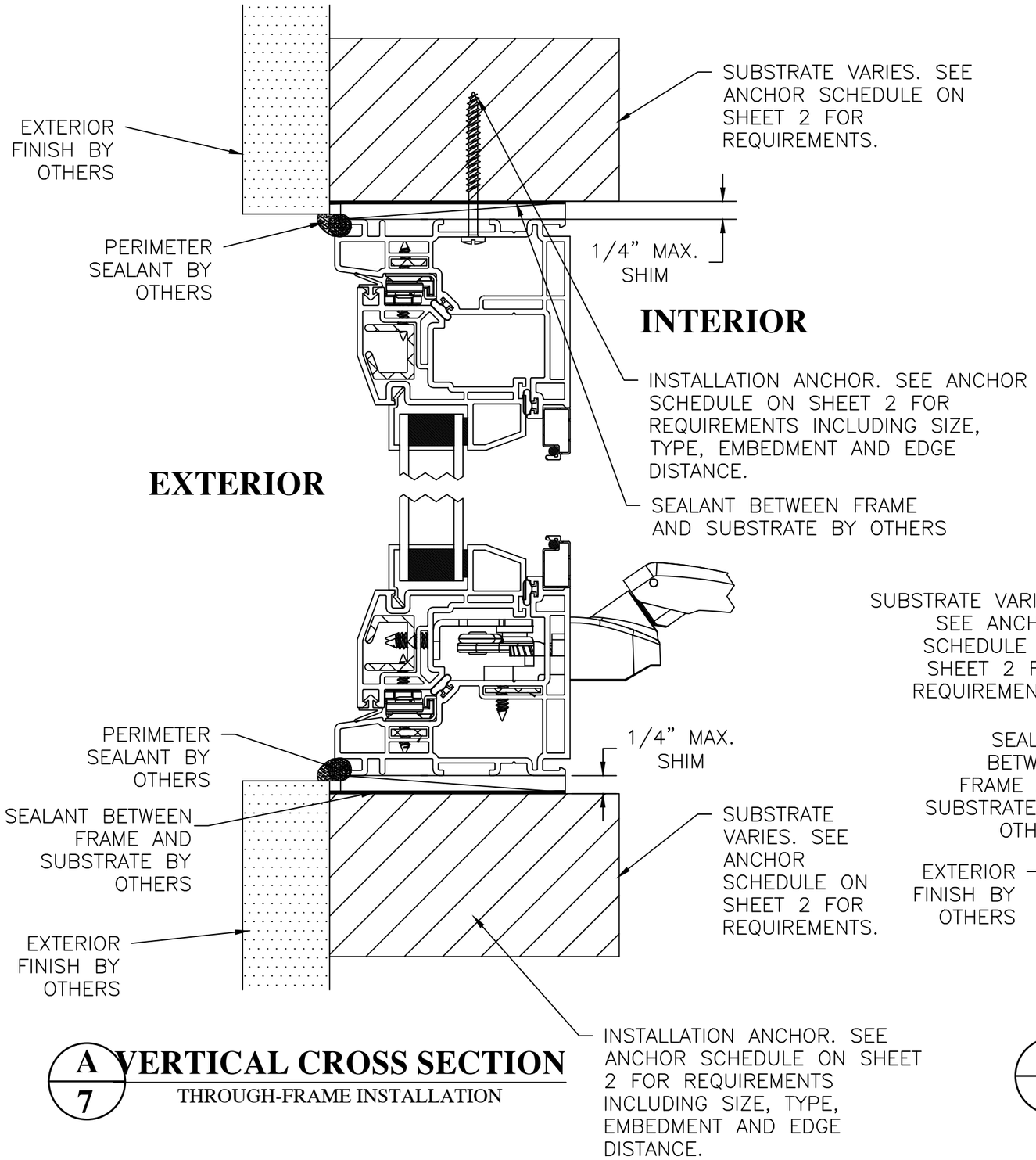

A / 7 **VERTICAL CROSS SECTION**

THROUGH-FRAME INSTALLATION

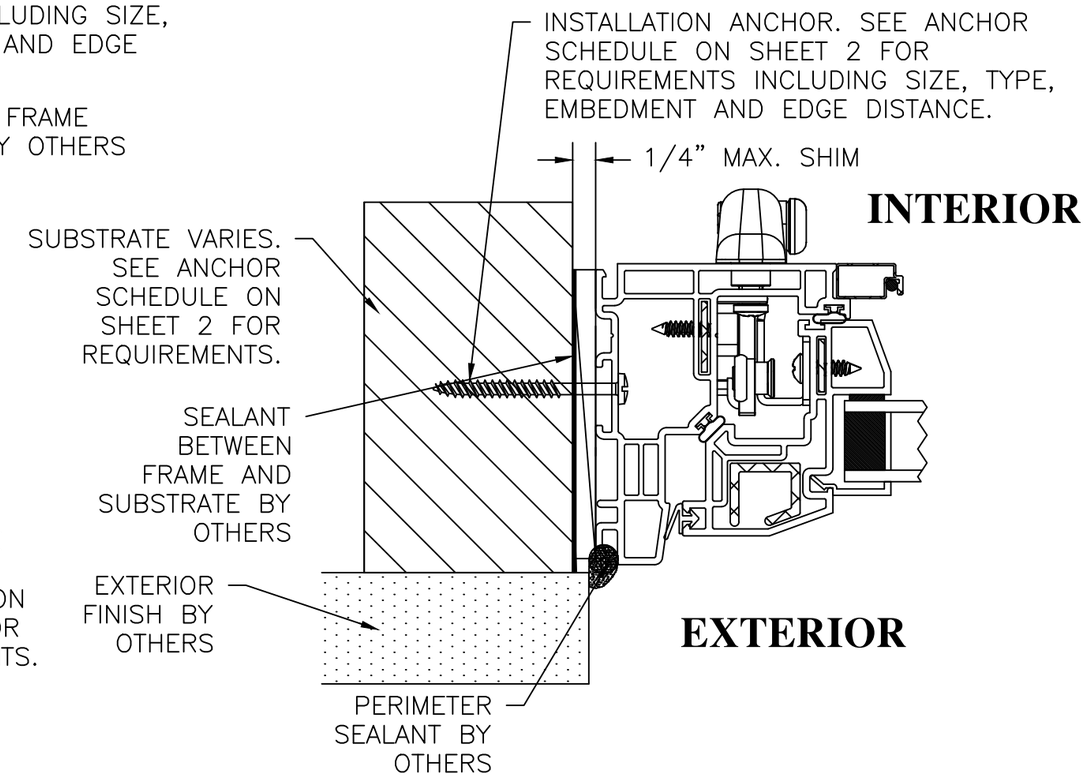

B / 7 **HORIZONTAL CROSS SECTION**

THROUGH-FRAME INSTALLATION

RENAISSANCE WINDOWS AND DOORS
13340 INTERNATIONAL PARKWAY
JACKSONVILLE, FL 32218

SERIES 8700 VINYL AWNING WINDOW ANCHORAGE DETAILS

NO.	REVISION DESCRIPTION	BY	DATE

DATE: 10/7/2024	DWN BY: RJA	CHK BY: n/a	SCALE: NONE

ROBERT J. AMORUSO, P.E. #49752
AMORUSO CONSULTING ENG., LLC
FBPE REGISTRATION NO. 38327
226 N NOVA RD, NO. 142
ORMOND BEACH, FL 32174
RJAENGPE@GMAIL.COM

PROJECT#: ACE-2024-136

DWG/REV: RWD029, Rev A

GLAZING DETAIL A

GLAZING METHOD: Glazed from exterior, secured with silicone sealant or foam glazing tape and vinyl glazing bead.

Block Frame Shown,
Fin Frame applicable.

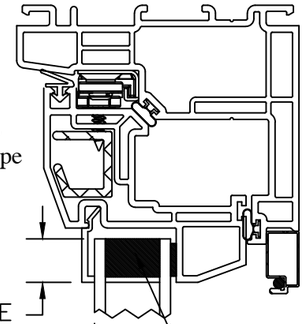

1/2" GLASS BITE

7/8" OVERALL THICKNESS IGU:
1/8" ANNEALED x AIR SPACE x
1/8" ANNEALED

STAINLESS STEEL SPACER

NOTES:

1. A MINIMUM OF TWO (2) NEOPRENE SETTING BLOCKS WITH 70 TO 90 SHORE A DUROMETER HARDNESS ARE REQUIRED AT BOTTOM (SILL) OF GLAZING LITES MORE THAN 3 FEET IN WIDTH.
2. AS-TESTED IGU SYSTEM SHOWN. SUBSTITUTIONS ARE ALLOWED IN ACCORDANCE WITH AAMA/WDMA/CSA 101/I.S. 2/A440-17, SECTIONS 10.2.3.3. SEE SHEET 1 FOR DETAILS RELATED TO WINDOW SIZE AND DESIGN PRESSURE.

BILL OF MATERIALS

PART NO.	DESCRIPTION	COMPANY	REMARKS
VINYL AND MISC. COMPONENTS			
10068	FRAME, NO NAIL FIN	MIKRON IND. INC.	
10775	FRAME, NAIL FIN	MIKRON IND. INC.	
7005	VENT	MIKRON IND. INC.	
5927	GLAZING BEAD 7/8" IG	MIKRON IND. INC.	
8483	GLAZING BEAD 3/4" IG	MIKRON IND. INC.	

RENAISSANCE WINDOWS
AND DOORS
13340 INTERNATIONAL PARKWAY
JACKSONVILLE, FL 32218

SERIES 8700 VINYL AWNING WINDOW ANCHORAGE DETAILS

NO.	REVISION DESCRIPTION	BY	DATE

DATE: 10/7/2024 | DWN BY: RJA | CHK BY: n/a | SCALE: NONE

ROBERT J. AMORUSO, P.E. #49752
AMORUSO CONSULTING ENG., LLC
FBPE REGISTRATION NO. 38327
226 N NOVA RD, NO. 142
ORMOND BEACH, FL 32174
RJAENGPE@GMAIL.COM

PROJECT#: ACE-2024-136

DWG/REV: RWD029, Rev A