EVALUATION REPORT OF
VALTO INC.
'DURALITE HIGH STRENGTH R-PANEL'

FLORIDA BUILDING CODE 9TH EDITION (2026)
FLORIDA PRODUCT APPROVAL
FL 38459.1-R3
STRUCTURAL COMPONENTS
ROOF DECK

Prepared For:
Valto Inc.
8015 Dixon Drive
Florence, KY 41042
Telephone: (859) 283-6198

Prepared By:
Bala Sockalingam, Ph.D., P.E.
Florida Professional Engineer #62240
1216 N Lansing Ave., Suite C
Tulsa, OK 74106
Telephone: (918) 492-5992

This report consists of
Evaluation Report (4 Pages including cover)
Installation Details (8 Pages)

Report No. C3064-2
Date: 9.26.2026

BALA SOCKALINGAM
LICENSE
No. 62240
STATE OF
FLORIDA
PROFESSIONAL ENGINEER

This item has been digitally signed and sealed by Bala Sockalingam, PE, on the date indicated.

Printed copies of this document are not considered signed and sealed and this signature must be verified on any electronic copies.

2026.09.26
14:21:19
-05'00'

Manufacturer:	Valto Inc.
Product Name:	Duralite High Strength R-Panel
Product Description:	Translucent, glass fiber reinforced plastic (FRP) panels. Nominal thickness 1/16 in. formed to the same configuration as metal R-Panels.
Materials:	Duralite High Strength (8 Oz 162DLW): FRP panel consists of an acrylic modified orthopthalic polyester resin with a combination of bidirectional woven roving and chopped strand glass fiber reinforcement. Self-ignition temperature greater than 650°F (343°C) in accordance with ASTM D1929. Maximum average smoke density rating less than 450 where tested in the thickness intended for use in accordance with ASTM E84. Plastic material Class CC2 with burning rate of less than $2^1/_2$ inches per minute in accordance with ASTM D635.
Support Description:	Min. 16 ga., 50 ksi steel section. (Must be designed by others)
Slope:	1/2:12 or greater in accordance with FBC 2026 Section 1507.4.2
Design Pressure: (Factor of Safety = 2)	±41.6 psf at maximum support spacing of 60" o.c.
Panel Attachment: At all supports:	All fasteners are corrosion resistant as per FBC 2026 Section 1507.4.4. #12-14 x 1" long self-tapping screws with 1-⅛" stainless steel washer backer and EPDM gasket at 3.5"-3.5"-5" o.c. across panel width (9 fasteners per panel).
Sidelap Attachment:	#6 x 1¼" long stainless-steel grommet with hex-head machine screw and neoprene sleeve at 10" o.c. For installation in areas within 3000 ft. of a saltwater coastline, panel and sidelap fasteners are corrosion resistant as per FBC 2026 Section 1711. Panels will be installed in accordance with FBC 2026 Section 2609 for CC2 class of plastics. Panels shall not be installed in groups H, I-2, I-3.
Test Standards:	Roof assembly tested in accordance with UL580-94 'Uplift Resistance of Roof Assemblies' and FM 4470 (2016) Section 4.6 'Resistance to Foot Traffic'.
Test Equivalency:	The test procedures in UL 580-94 comply with test procedures prescribed in UL 580-06.

The test procedures in FM 4470 (2016) comply with test procedures prescribed in FM 4470 (2022) Section 4.6 'Resistance to Foot Traffic'.

ASTM E84-10 procedures utilized in Intertek Testing Services' Reports 100054347SAT-003 Rev. 1 comply with test procedures prescribed in ASTM E84-24.

ASTM D635-06 procedures utilized in Intertek Testing Services' Report 100054347 comply with test procedures prescribed in ASTM D635-18.

ASTM D1929-96 procedures utilized in Intertek Testing Services' Report 100054347W13-002 comply with test procedures prescribed in ASTM D1929-20.

Code Compliance: The product described herein has demonstrated compliance with FBC 2026 Section 1504.3.2, 1504.7, 1507.4 and 2606.4.

Product Limitations: Design wind loads shall be determined for each project in accordance with FBC 2026 Section 1609 or ASCE 7-22 using allowable stress design. The maximum support spacing listed herein shall not be exceeded. The design pressure for reduced support spacing may be computed using rational analysis prepared by a Florida Professional Engineer. This evaluation report is not applicable in High Velocity Hurricane Zone. Fire classification and impact resistance is not within the scope of this evaluation. Refer to FBC 2026 Section 1505 and current approved roofing materials directory or ASTM E108/UL790 report from an accredited laboratory for fire ratings of this product. Panels must be installed as per Valto current installation details.

Supporting Documents: UL580 Test Report
Farabaugh Engineering and Testing Inc.
Project No. T214-10, Reporting Date 5/10/2010

FM 4470 Test Report
ENCON Technology Inc.
C2466-1, Reporting Date 4/16/2021

ASTM E84 Test Reports
Intertek Testing Services.
100054347SAT-003 Rev. 1, Reporting Date 4/9/2010

ASTM D635 Test Report
Intertek Testing Services
Report 100054347, Reporting Date 3/30/2010

ASTM D1929 Test Report
Intertek Testing Services
Report 100054347W13-002, Reporting Date 5/3/2010

VALTO | ENGINEERED MATERIALS

DURALITE®

HIGH STRENGTH R-PANEL (PROFILE #162)

INSTALLATION GUIDE

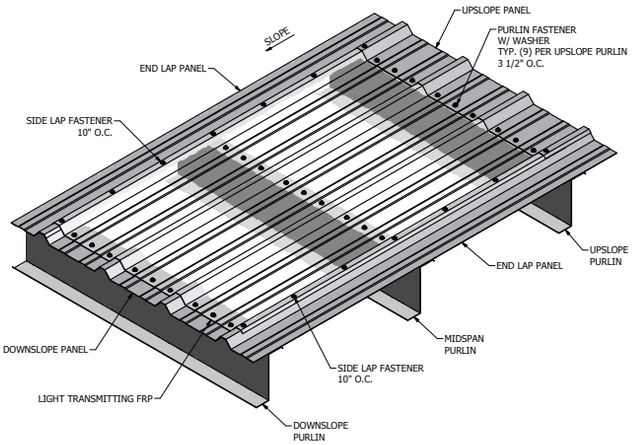

frp

FIBERGLASS REINFORCED PANELS

DISCLAIMER

PLEASE READ ALL INSTRUCTIONS BEFORE BEGINNING INSTALLATION

These guidelines are provided in good faith to help prevent installation problems caused by common errors. The manufacturer and/or distributor of the product bears no responsibility for installation actions taken or not taken. There are many nuances of installation that are assumed to be general construction knowledge to an experienced installer; such nuances are not included in these instructions. Rather, these installation guidelines are strictly recommendations and are not intended to serve as a step-by-step, foolproof installation checklist. Selection of an experienced FRP installer is the sole responsibility of the project owner and architect. VALTO does not accept any responsibility for job failure resulting from or associated with improper job site environmental conditions.

NOTE: The instructions provided in this document are applicable for installation of both roofs and walls.

SEE OUR MOST CURRENT SDS AT VALTOEM.COM/SDS PRIOR TO WORKING WITH OUR PRODUCTS

R-PANEL | PROFILE TOOL #162

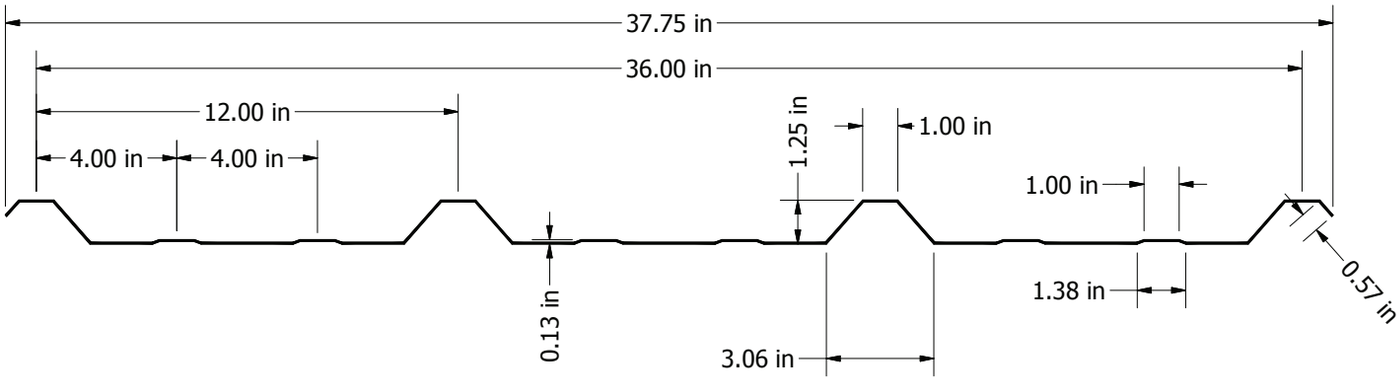

Purlin Fasteners With Washers:

#12-14 x 1" self-tapping screws with corrosion resistant coating and 1⅛" stainless steel washer backer with an EPDM gasket.

Side Lap Fasteners:

#6 x 1¼" stainless steel grommet with hex head machine screw and neoprene sleeve.

Step 1:

Apply tape sealer to lower panel: apply along peak of major ribs (2) for side laps and across panel width at downslope for sealing end lap.

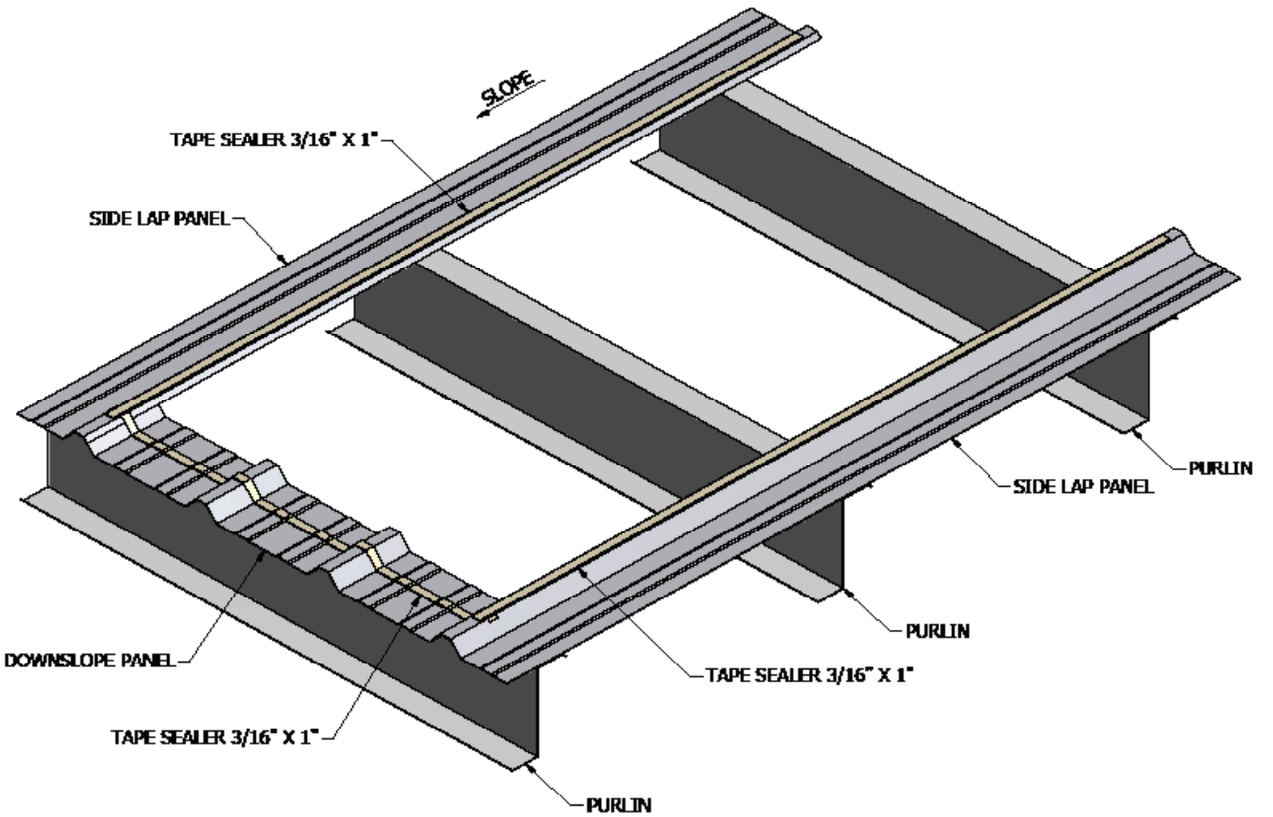

Figure 1: Tape Sealer Placement – Lower Panel

Step 2:

Fasten light transmitting panel to the purlin at the downslope end and to the intermediate purlin. For each purlin, use 9 Purlin fasteners with washers.

See Figure 3 for fastening detail and Figure 4 for fastener spacing.

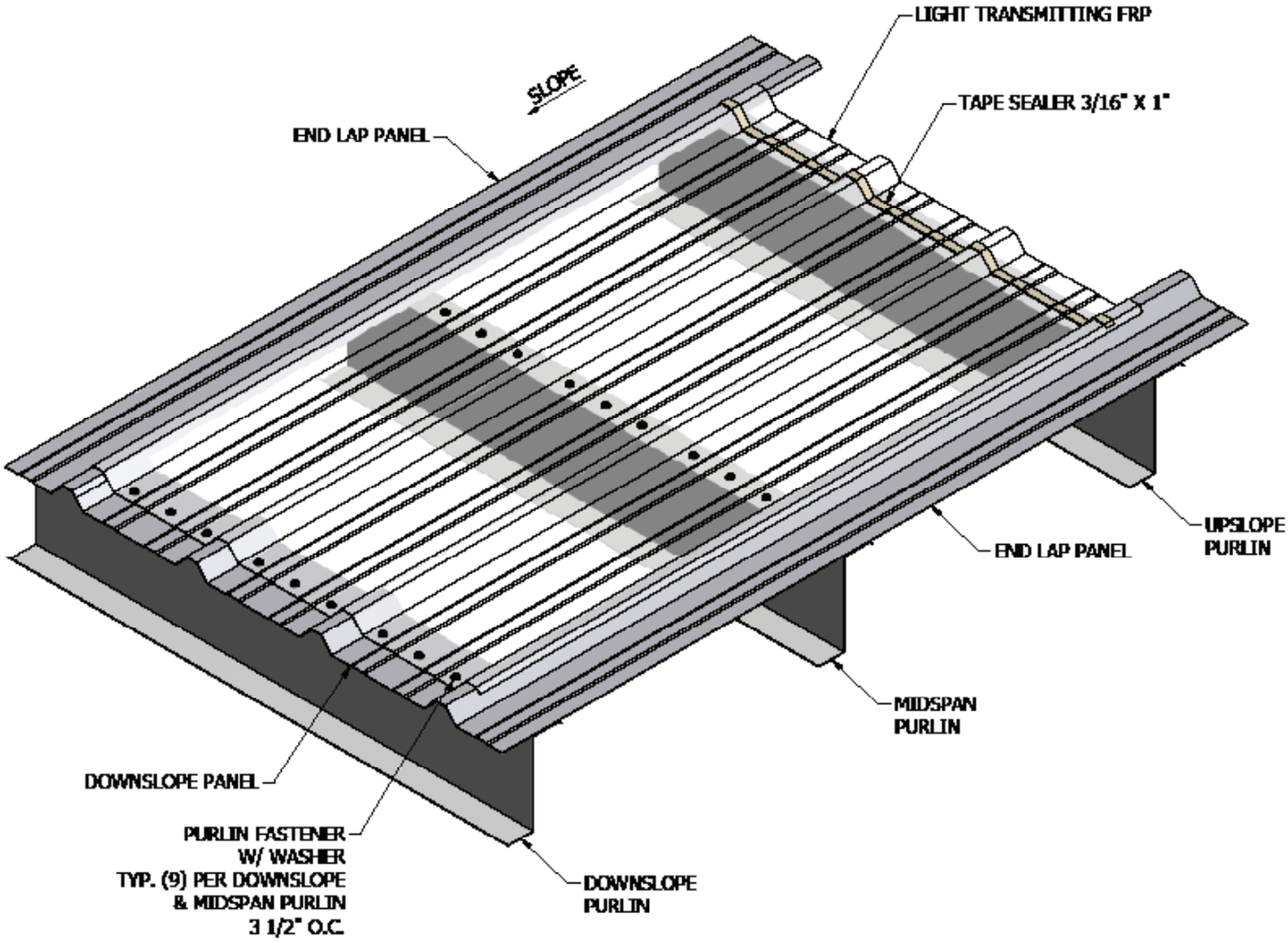

Figure 2: Fasten Light Transmitting Panel to Purlins

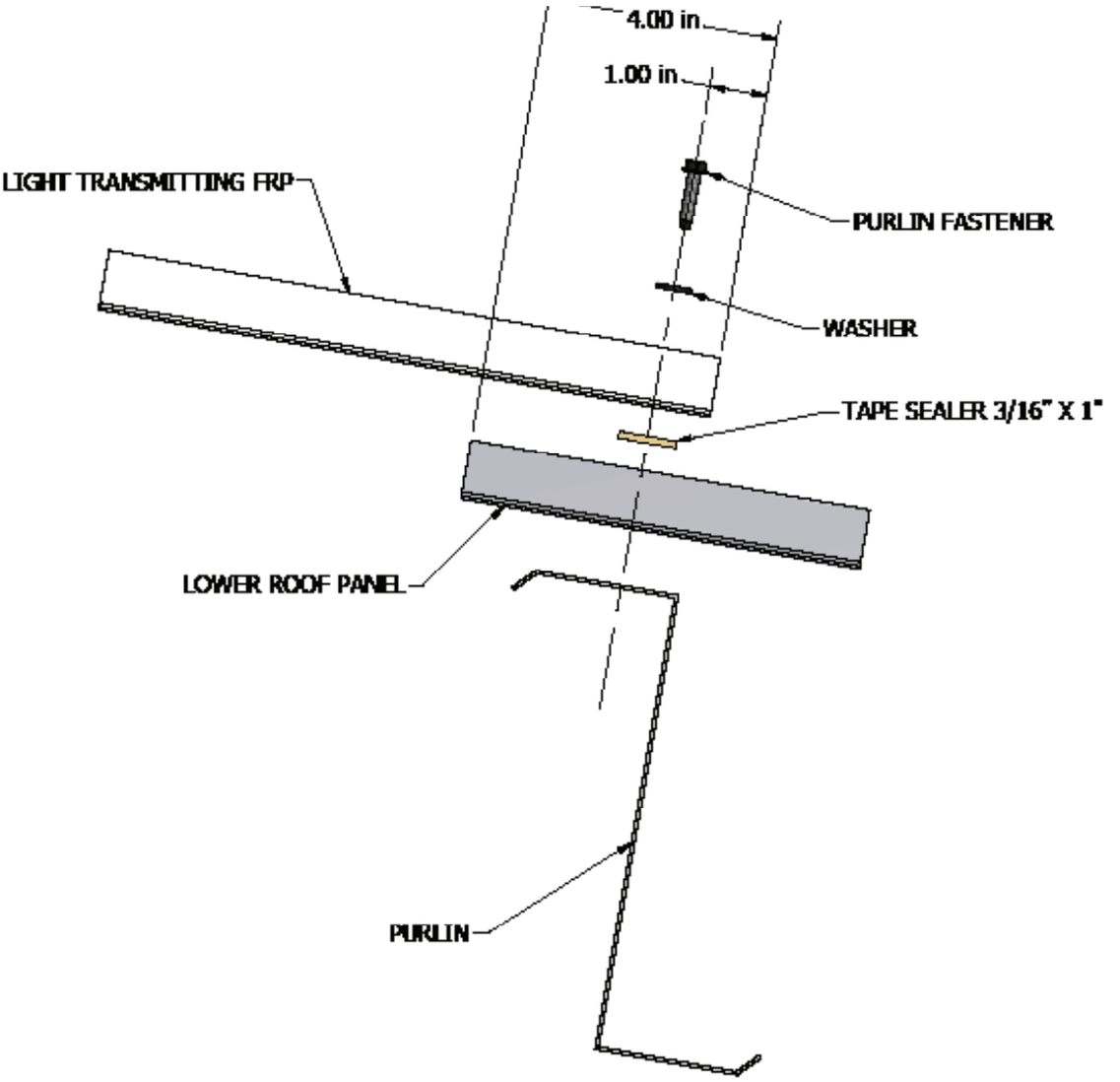

Figure 3: Fastening Detail for End lap at Downslope

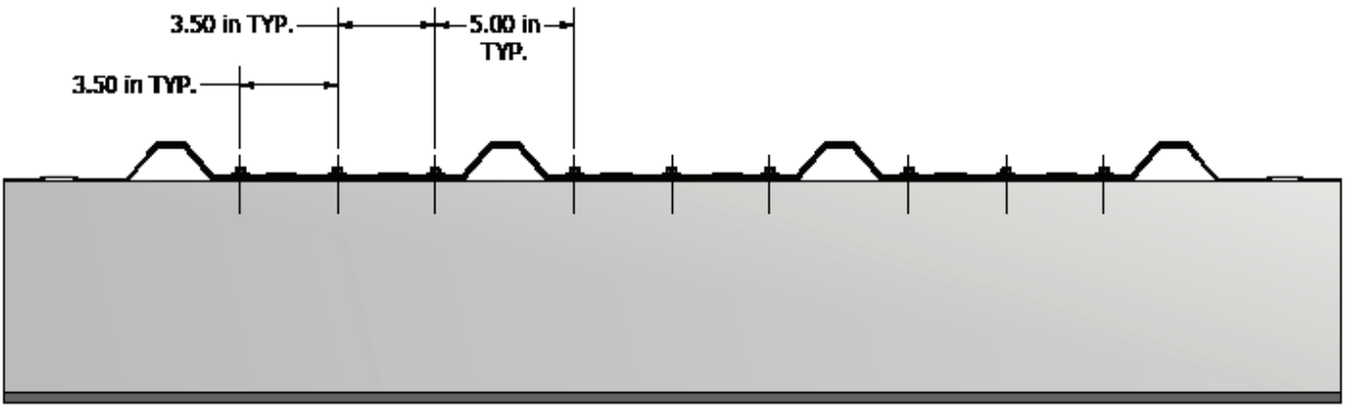

Figure 4: Fastener Spacing for Fastening to Purlins

Step 3:

Make certain sealer tape has been applied for the side laps and for the end lap at the upslope.

Fasten side laps with panel side lap fasteners 10" on center.

Fasten end lap at upslope with 9 Purlin Fasteners

See Figure 6 for fastening detail and Figure 4 for fastener spacing.

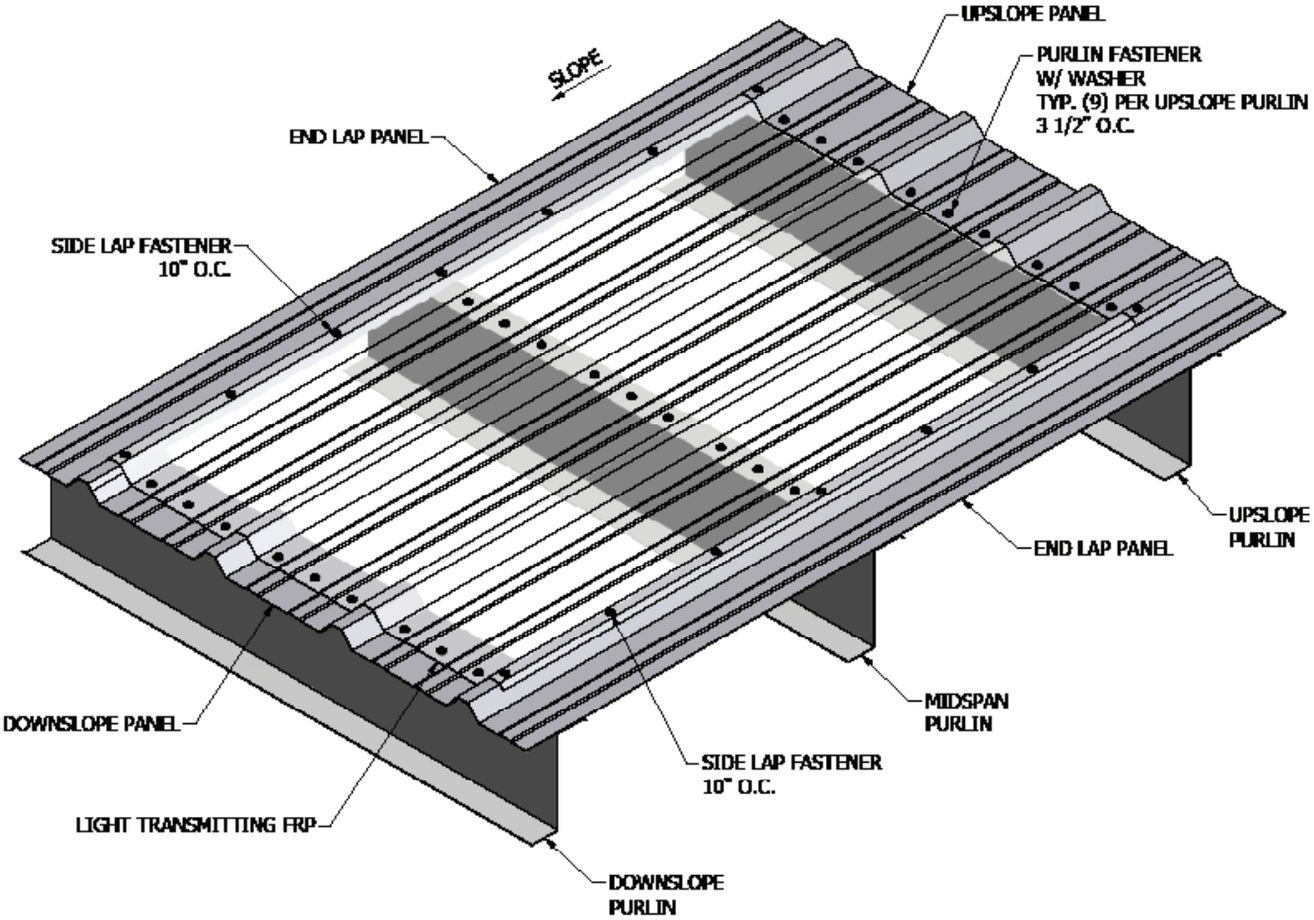

Figure 5: Install Upper Metal Panel and Fasten Side Laps

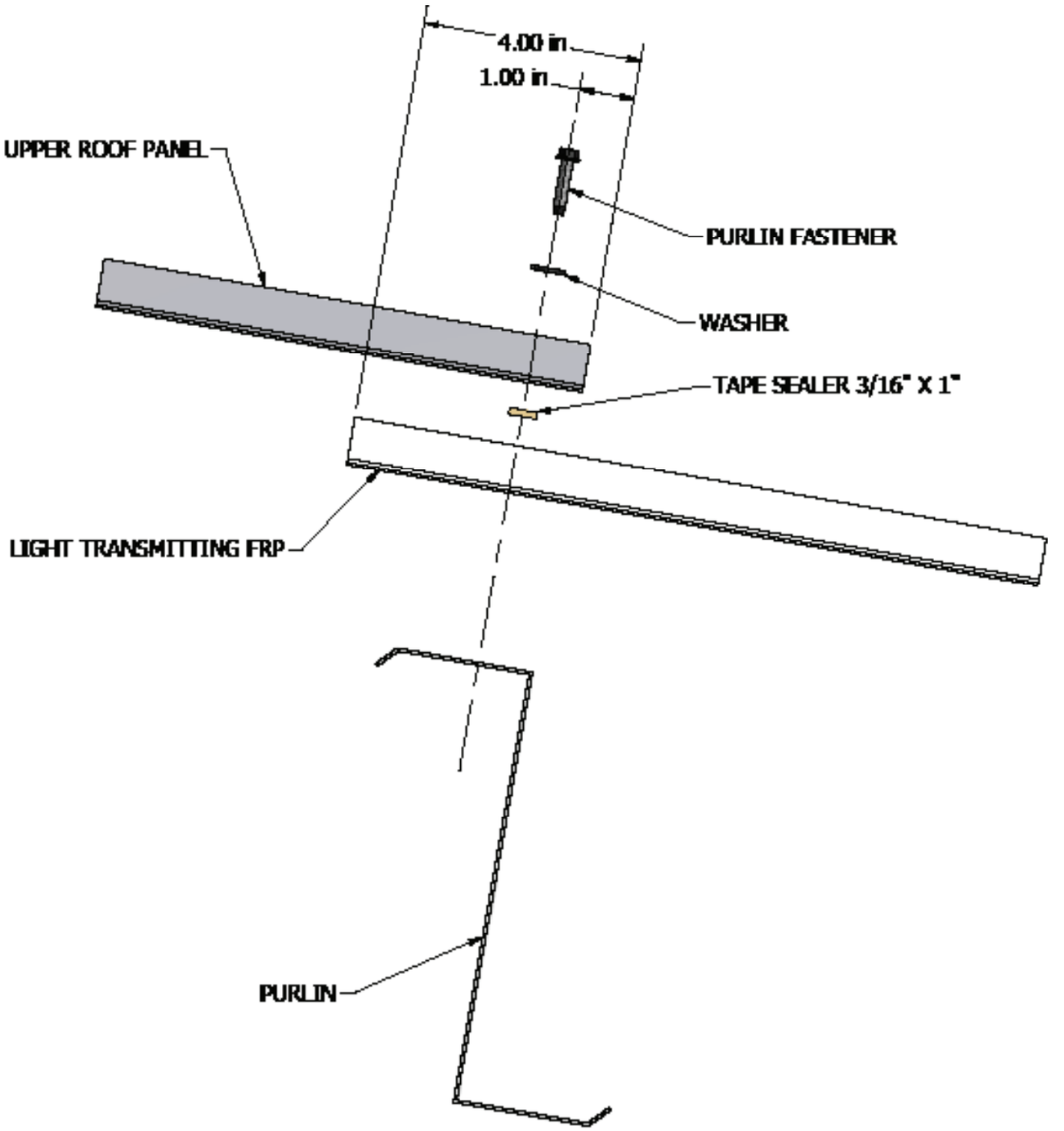

Figure 6: Fastening Detail for End Lap at Upslope

FOR QUESTIONS OR CONCERNS, PLEASE CONTACT:

VALTO Florence Technical Department
8015 Dixon Drive | Florence, Kentucky 41042
1.859.371.7720

At Valto, we partner with our customers, and through innovation, deliver advanced materials that enhance everyday environments. We succeed through a culture of collaboration, continuous improvement, and excellence. With integrity at our core, we challenge the status quo and pursue innovative approaches that benefit our customers and associates.

Since 1954, Valto Engineered Materials has provided innovative products and services and is a leading provider of FRP composite panels. Our lightweight composite products deliver unsurpassed strength and durability; and we continue to pioneer next level performance in building materials, recreational vehicles, and transportation.

The following are trademarks of Valto, Inc. or a related company: Duralite
Form 3900 | Rev. 01 | 09.25 (5434)