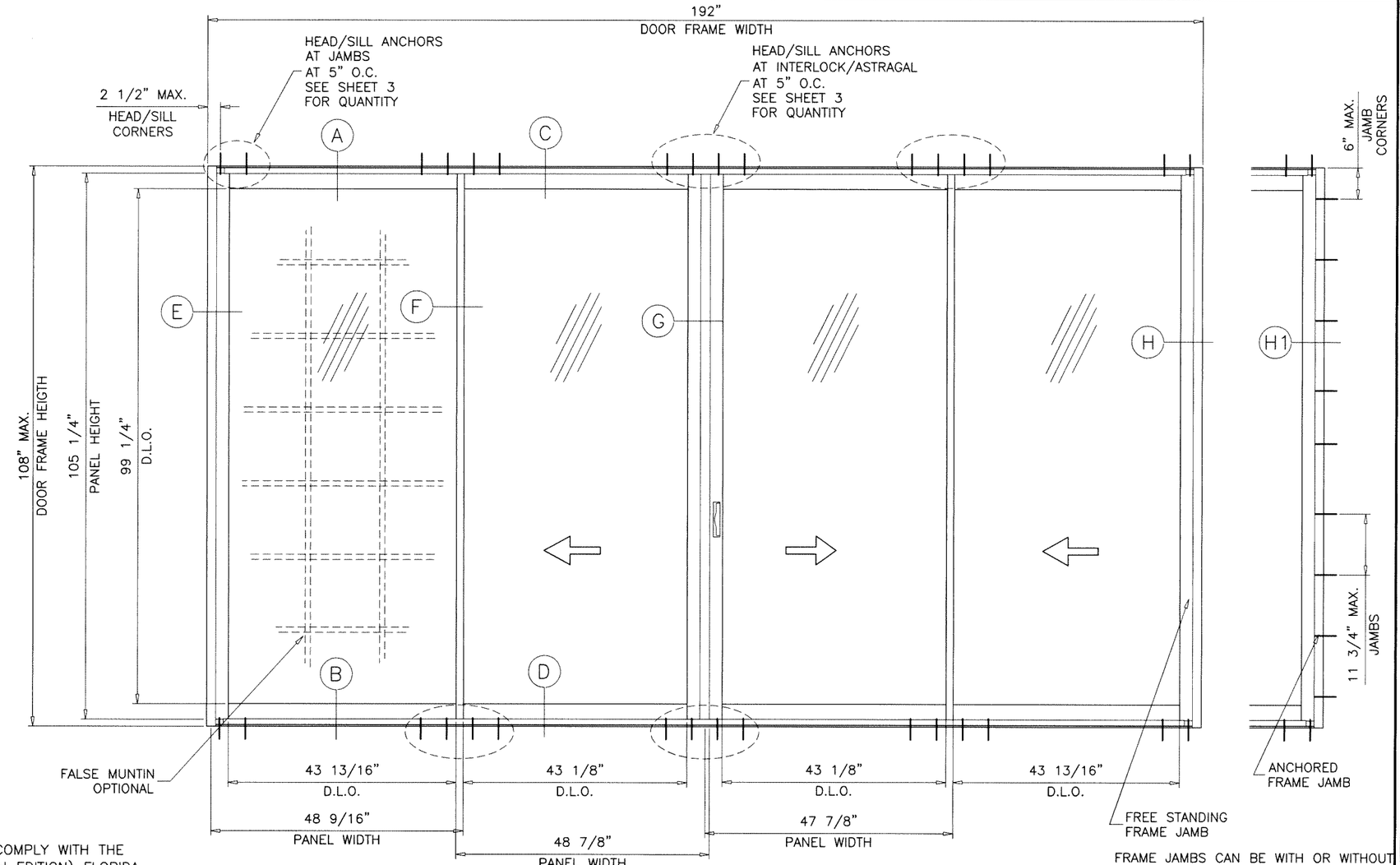

FRAME JAMBS CAN BE WITH OR WITHOUT JAMB ANCHORS AS SHOWN ABOVE

TYPICAL ELEVATION

TESTED UNIT

SERIES MG-1500 (S.M.I.)
ALUMINUM SLIDING GLASS DOOR

THIS PRODUCT HAS BEEN DESIGNED AND TESTED TO COMPLY WITH THE REQUIREMENTS OF THE 2020 (7TH EDITION)/2023 (8TH EDITION) FLORIDA BUILDING CODE INCLUDING HIGH VELOCITY HURRICANE ZONE (HVHZ).

1BY OR 2BY WOOD BUCKS & BUCK FASTENERS BY OTHERS, MUST BE DESIGNED AND INSTALLED ADEQUATELY TO TRANSFER APPLIED PRODUCT LOADS TO THE BUILDING STRUCTURE.

ANCHORS SHALL BE CORROSION RESISTANT, SPACED AS SHOWN ON DETAILS AND INSTALLED PER MANUF'S INSTRUCTIONS. SPECIFIED EMBEDMENT TO BASE MATERIAL SHALL BE BEYOND WALL DRESSING OR STUCCO.

A LOAD DURATION INCREASE IS USED IN DESIGN OF ANCHORS INTO WOOD ONLY.

ALL SHIMS TO BE HIGH IMPACT, NON-METALLIC AND NON-COMPRESSIBLE.

MATERIALS INCLUDING BUT NOT LIMITED TO STEEL/METAL SCREWS, THAT COME INTO CONTACT WITH OTHER DISSIMILAR MATERIALS SHALL MEET THE REQUIREMENTS OF THE 2020/2023 FLORIDA BLDG. CODE & ADOPTED STANDARDS.

THIS PRODUCT APPROVAL IS GENERIC AND DOES NOT PROVIDE INFORMATION FOR A SITE SPECIFIC PROJECT, i.e. LIFE SAFETY OF THIS PRODUCT, ADEQUACY OF STRUCTURE RECEIVING THIS PRODUCT AND SEALING AROUND OPENING FOR WATER INFILTRATION RESISTANCE ETC.
CONDITIONS NOT SHOWN IN THIS DRAWING ARE TO BE ANALYZED SEPARATELY, AND TO BE REVIEWED BY BUILDING OFFICIAL.

DESIGN LOADS SHOWN ARE BASED ON 'ALLOWABLE STRESS DESIGN (ASD)'.

MANUFACTURER'S LABEL SHALL BE LOCATED ON A READILY VISIBLE LOCATION IN ACCORDANCE WITH SECTION 1709.9.3 OF FLORIDA BUILDING CODE. LABELING TO COMPLY WITH SECTION 1709.9.2.

INSTRUCTIONS:

USE CHARTS AS FOLLOWS

STEP 1 DETERMINE DESIGN WIND LOAD REQUIREMENT BASED ON WIND VELOCITY, BLDG. HEIGHT, WIND ZONE USING APPLICABLE ASCE 7 STANDARD.

STEP 2 DETERMINE DOOR CAPACITY FROM TABLE ON SHEET 2 FOR INTERLOCK AND ASTRAGAL STILES USED.

STEP 3 USING CHARTS ON SHEET 3 SELECT ANCHOR OPTION WITH DESIGN RATING MORE THAN DESIGN LOAD SPECIFIED IN STEP 1 ABOVE.

STEP 4 FOR DOORS WITH FREE STANDING JAMBS SEE SHEET 7 TO VERIFY MIN. & MAX. GAP DIMENSIONS.

STEP 5 THE LOWEST VALUE RESULTING FROM STEPS 2 THRU 4 SHALL APPLY TO ENTIRE SYSTEM.

THESE DOORS ARE RATED FOR SMALL MISSILE IMPACT.
F.B.C. APPROVED IMPACT RESISTANT SHUTTERS
REQUIRED FOR INSTALLATIONS UP TO 30 FT. OF GRADE.
SHUTTERS NOT REQD. FOR INSTALLATIONS ABOVE 30 FT. OF GRADE.

Sealed: 7/21/2023

FL #38057

A- CONTRACTOR TO BE RESPONSIBLE FOR THE SELECTION, PURCHASE AND INSTALLATION OF THIS PRODUCT BASED ON THIS PRODUCT EVALUATION PROVIDED HE/SHE DOES NOT DEVIATE FROM THE CONDITIONS DETAILED ON THIS DOCUMENT.

B- THIS PRODUCT EVALUATION DOCUMENT WILL BE CONSIDERED INVALID IF ALTERED BY ANY MEANS.

C- SITE SPECIFIC PROJECTS SHALL BE PREPARED BY A FLORIDA REGISTERED ENGINEER OR ARCHITECT WHICH WILL BECOME THE ENGINEER OF RECORD (E.O.R.) FOR THE PROJECT AND WHO WILL BE RESPONSIBLE FOR THE PROPER USE OF THE P.E.D. ENGINEER OF RECORD, ACTING AS A DELEGATED ENGINEER TO THE P.E.D. ENGINEER SHALL SUBMIT TO THIS LATTER THE SITE SPECIFIC DRAWINGS FOR REVIEW.

D- THIS P.E.D. SHALL BEAR THE DATE AND ORIGINAL SEAL AND SIGNATURE OF THE PROFESSIONAL ENGINEER OF RECORD THAT PREPARED IT.

JALAL FAROOQ LICENSE No. 81223 STATE OF FLORIDA PROFESSIONAL ENGINEER

AL-FAROOQ CORPORATION
ENGINEERS & PRODUCT DEVELOPMENT
9360 SUNSET DRIVE, SUITE 220
MIAMI, FLORIDA 33173 (C.A.N. 3538)
TEL. (305) 264-8100 FAX. (305) 262-6978

COMP-ANL\21-20F-MG

MG-1500 ALUM SLIDING GLASS DOOR (S.M.I.)

MR-GLASS DOORS & WINDOWS MANUFACTURING, LLC
8051 N.W. 79th Place
Medley, FL. 33166
Tel. (305) 764-3963 Fax. (305) 470-8285

revisions:			
no	date	by	description
A	06.07.23		STD. ASTRAGAL ADDED
B	07.18.23		UPDATED TO 2023 FBC

date: 03-11-21
scale: 1/2"=1'-0"
dr. by: TARIQ
chk. by:

drawing no. 21-20F

sheet 1 of 11

DESIGN LOAD CAPACITY – PSF					
AVERAGE PANEL WIDTH INCHES	DOOR FRAME HEIGHT INCHES	STD. INTERLOCKS STD. ASTRAGAL		H.D. INTERLOCKS H.D. ASTRAGAL	
		EXT.(+)	INT.(–)	EXT.(+)	INT.(–)
30	82	60.0	65.0	60.0	70.0
36		60.0	65.0	60.0	70.0
42		60.0	65.0	60.0	70.0
48		60.0	65.0	60.0	70.0
54		–	–	60.0	70.0
60		–	–	60.0	70.0
63		–	–	60.0	70.0
30	84	60.0	65.0	60.0	70.0
36		60.0	65.0	60.0	70.0
42		60.0	65.0	60.0	70.0
48		60.0	65.0	60.0	70.0
54		–	–	60.0	70.0
61		–	–	60.0	70.0
30	90	–	–	60.0	70.0
36		–	–	60.0	70.0
42		–	–	60.0	70.0
48		–	–	60.0	70.0
54		–	–	60.0	70.0
57		–	–	60.0	70.0
30	96	–	–	60.0	70.0
36		–	–	60.0	70.0
42		–	–	60.0	70.0
48		–	–	60.0	70.0
50		–	–	60.0	70.0
54		–	–	60.0	70.0
30	102	–	–	60.0	70.0
36		–	–	60.0	70.0
42		–	–	60.0	70.0
48		–	–	60.0	70.0
50		–	–	60.0	70.0
30	108	–	–	60.0	70.0
36		–	–	60.0	70.0
42		–	–	60.0	70.0
48		–	–	60.0	70.0

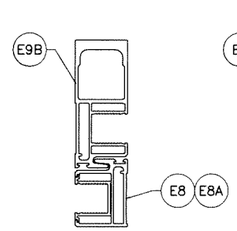

STD. INTERLOCKS

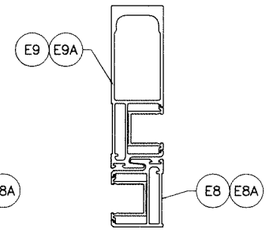

H.D. INTERLOCKS

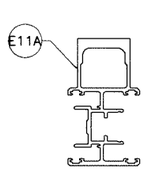

STD. ASTRAGAL

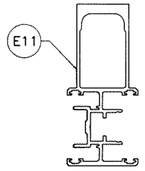

H.D. ASTRAGAL

SEE CHART ABOVE FOR DESIGN LOAD CAPACITY OF DESIRED GLASS SIZE.

SEE CHART ON SHEET 3 FOR HEAD/SILL ANCHOR CAPACITY.

LOWER DESIGN PRESSURES FROM DESIGN LOAD CHART OR ANCHOR CHART WILL APPLY TO ENTIRE SYSTEM.

DOOR HEIGHT AND WIDTH SIZE MUST COMPLY EGRESS REQUIREMENTS PER FBC AS REQUIRED.

$$\text{AVERAGE PANEL WIDTH} = \frac{\text{DOOR FRAME WIDTH}}{\text{NUMBER OF PANELS}}$$

NOTE:
GLASS CAPACITIES ON THIS SHEET ARE BASED ON ASTM E1300–09 (3 SEC. GUSTS) AND FLORIDA BUILDING COMMISSION DECLARATORY STATEMENT DCA05–DEC–219

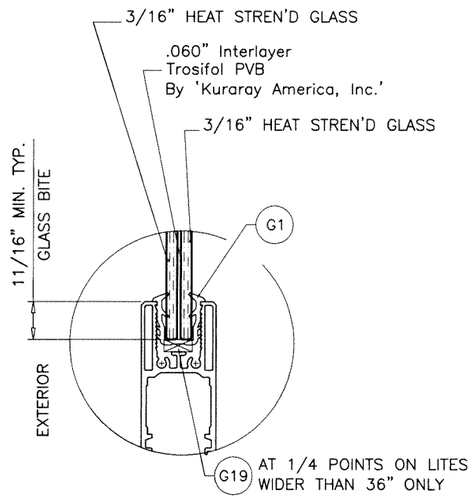

GLAZING DETAIL

7/16" OVERALL LAM. GLASS

Sealed: 7/21/2023

FL #38057

AL-FAROOQ CORPORATION
ENGINEERS & PRODUCT DEVELOPMENT
9360 SUNSET DRIVE, SUITE 220
MIAMI, FLORIDA 33173 (C.A.N. 3538)
TEL. (305) 264-8100 FAX. (305) 262-6978

COMP–ANL\21–20F–MG

MG–1500 ALUM SLIDING GLASS DOOR (S.M.I.)

MR–GLASS DOORS & WINDOWS MANUFACTURING, LLC
8051 N.W. 79th Place
Medley, FL. 33166
Tel. (305) 764–3963 Fax. (305) 470–8285

revisions:

no	date	by	description

date: 03–11–21
scale: 3/8" = 1"
dr. by: TARIQ
chk. by:

drawing no. 21–20F

sheet 2 of 11

HEAD/SILL ANCHOR LOAD CAPACITY – PSF

AVERAGE PANEL WIDTH INCHES	DOOR FRAME HEIGHT INCHES	1/4" MAX. SHIM SPACE					3/8" MAX. SHIM SPACE						1/2" MAX. SHIM SPACE				3/4" MAX. SHIM SPACE					
		ANCHOR TYPE 'A'		ANCHOR 'B'	ANCHOR TYPE 'C'		ANCHOR TYPE 'A'		ANCHOR TYPE 'B'		ANCHOR TYPE 'C'		ANCHOR TYPE 'A' & 'B'		ANCHOR TYPE 'C'		ANCHOR TYPE 'A' & 'B'			ANCHOR TYPE 'C'		
		2 ANCHORS AT JAMBS	3 ANCHORS AT JAMBS	2 ANCHORS AT JAMBS	2 ANCHORS AT JAMBS	3 ANCHORS AT JAMBS	2 ANCHORS AT JAMBS	3 ANCHORS AT JAMBS	2 ANCHORS AT JAMBS	3 ANCHORS AT JAMBS	2 ANCHORS AT JAMBS	3 ANCHORS AT JAMBS	2 ANCHORS AT JAMBS	3 ANCHORS AT JAMBS	2 ANCHORS AT JAMBS	3 ANCHORS AT JAMBS	2 ANCHORS AT JAMBS	3 ANCHORS AT JAMBS	4 ANCHORS AT JAMBS	2 ANCHORS AT JAMBS	3 ANCHORS AT JAMBS	4 ANCHORS AT JAMBS
		4 ANCHORS STILE ENDS	6 ANCHORS STILE ENDS	4 ANCHORS STILE ENDS	4 ANCHORS STILE ENDS	6 ANCHORS STILE ENDS	4 ANCHORS STILE ENDS	6 ANCHORS STILE ENDS	4 ANCHORS STILE ENDS	6 ANCHORS STILE ENDS	4 ANCHORS STILE ENDS	6 ANCHORS STILE ENDS	4 ANCHORS STILE ENDS	6 ANCHORS STILE ENDS	4 ANCHORS STILE ENDS	6 ANCHORS STILE ENDS	4 ANCHORS STILE ENDS	6 ANCHORS STILE ENDS	8 ANCHORS STILE ENDS	4 ANCHORS STILE ENDS	6 ANCHORS STILE ENDS	8 ANCHORS STILE ENDS
		EXT. (+) INT. (–)	EXT. (+) INT. (–)	EXT. (+) INT. (–)	EXT. (+) INT. (–)	EXT. (+) INT. (–)	EXT. (+) INT. (–)	EXT. (+) INT. (–)	EXT. (+) INT. (–)	EXT. (+) INT. (–)	EXT. (+) INT. (–)	EXT. (+) INT. (–)	EXT. (+) INT. (–)	EXT. (+) INT. (–)	EXT. (+) INT. (–)	EXT. (+) INT. (–)	EXT. (+) INT. (–)	EXT. (+) INT. (–)	EXT. (+) INT. (–)	EXT. (+) INT. (–)	EXT. (+) INT. (–)	EXT. (+) INT. (–)
30	82	70.0	70.0	70.0	70.0	70.0	70.0	70.0	70.0	70.0	70.0	70.0	70.0	70.0	70.0	70.0	70.0	70.0	70.0	70.0	70.0	70.0
36		70.0	70.0	70.0	70.0	70.0	70.0	70.0	70.0	70.0	70.0	70.0	70.0	70.0	70.0	70.0	70.0	70.0	70.0	63.8	70.0	70.0
42		70.0	70.0	70.0	70.0	70.0	70.0	70.0	70.0	70.0	70.0	70.0	70.0	70.0	70.0	70.0	60.1	70.0	70.0	54.7	70.0	70.0
48		70.0	70.0	70.0	70.0	70.0	70.0	70.0	70.0	70.0	70.0	70.0	68.4	70.0	61.7	70.0	52.6	70.0	70.0	47.8	70.0	70.0
54		69.5	70.0	70.0	70.0	70.0	69.5	70.0	70.0	70.0	64.2	70.0	60.8	70.0	54.8	70.0	46.8	70.0	70.0	42.5	63.8	70.0
60		62.5	70.0	70.0	69.5	70.0	62.5	70.0	64.4	70.0	57.7	70.0	54.7	70.0	49.4	70.0	42.1	63.1	70.0	38.3	57.4	70.0
63		59.5	70.0	70.0	66.2	70.0	59.5	70.0	61.4	70.0	55.0	70.0	52.1	70.0	47.0	70.0	40.1	60.1	70.0	36.4	54.7	70.0
30	84	70.0	70.0	70.0	70.0	70.0	70.0	70.0	70.0	70.0	70.0	70.0	70.0	70.0	70.0	70.0	70.0	70.0	70.0	70.0	70.0	70.0
36		70.0	70.0	70.0	70.0	70.0	70.0	70.0	70.0	70.0	70.0	70.0	70.0	70.0	70.0	70.0	68.5	70.0	70.0	62.2	70.0	70.0
42		70.0	70.0	70.0	70.0	70.0	70.0	70.0	70.0	70.0	70.0	70.0	70.0	70.0	68.8	70.0	58.7	70.0	70.0	53.4	70.0	70.0
48		70.0	70.0	70.0	70.0	70.0	70.0	70.0	70.0	70.0	70.0	70.0	66.8	70.0	60.2	70.0	51.3	70.0	70.0	46.7	70.0	70.0
54		67.8	70.0	70.0	70.0	70.0	67.8	70.0	69.9	70.0	62.6	70.0	59.4	70.0	53.5	70.0	45.6	68.5	70.0	41.5	62.2	70.0
61		60.0	70.0	70.0	66.8	70.0	60.0	70.0	61.9	70.0	55.4	70.0	52.6	70.0	47.4	70.0	40.4	60.6	70.0	36.7	55.1	70.0
30	90	70.0	70.0	70.0	70.0	70.0	70.0	70.0	70.0	70.0	70.0	70.0	70.0	70.0	70.0	70.0	70.0	70.0	70.0	69.7	70.0	70.0
36		70.0	70.0	70.0	70.0	70.0	70.0	70.0	70.0	70.0	70.0	70.0	70.0	70.0	70.0	70.0	63.9	70.0	70.0	58.1	70.0	70.0
42		70.0	70.0	70.0	70.0	70.0	70.0	70.0	70.0	70.0	70.0	70.0	70.0	70.0	64.2	70.0	54.8	70.0	70.0	49.8	70.0	70.0
48		70.0	70.0	70.0	70.0	70.0	70.0	70.0	70.0	70.0	65.8	70.0	62.3	70.0	56.2	70.0	47.9	70.0	70.0	43.6	65.4	70.0
54		63.3	70.0	70.0	70.0	70.0	63.3	70.0	65.2	70.0	58.5	70.0	55.4	70.0	50.0	70.0	42.6	63.9	70.0	38.7	58.1	70.0
57		60.0	70.0	70.0	66.7	70.0	60.0	70.0	61.8	70.0	55.4	70.0	52.5	70.0	47.3	70.0	40.4	60.5	70.0	36.7	55.0	70.0
30	96	70.0	70.0	70.0	70.0	70.0	70.0	70.0	70.0	70.0	70.0	70.0	70.0	70.0	70.0	70.0	70.0	70.0	70.0	65.4	70.0	70.0
36		70.0	70.0	70.0	70.0	70.0	70.0	70.0	70.0	70.0	70.0	70.0	70.0	70.0	70.0	70.0	59.9	70.0	70.0	54.5	70.0	70.0
42		70.0	70.0	70.0	70.0	70.0	70.0	70.0	70.0	70.0	70.0	70.0	66.8	70.0	60.2	70.0	51.3	70.0	70.0	46.7	70.0	70.0
48		66.8	70.0	70.0	70.0	70.0	66.8	70.0	68.8	70.0	61.7	70.0	58.5	70.0	52.7	70.0	44.9	67.4	70.0	40.9	61.3	70.0
50		64.1	70.0	70.0	70.0	70.0	64.1	70.0	66.0	70.0	59.2	70.0	56.1	70.0	50.6	70.0	43.1	64.7	70.0	39.2	58.8	70.0
54		59.3	70.0	70.0	66.0	70.0	59.3	70.0	61.2	70.0	54.8	70.0	52.0	70.0	46.8	70.0	39.9	59.9	70.0	36.3	54.5	70.0
30	102	70.0	70.0	70.0	70.0	70.0	70.0	70.0	70.0	70.0	70.0	70.0	70.0	70.0	70.0	70.0	67.7	70.0	70.0	61.5	70.0	70.0
36		70.0	70.0	70.0	70.0	70.0	70.0	70.0	70.0	70.0	70.0	70.0	70.0	70.0	66.1	70.0	56.4	70.0	70.0	51.3	70.0	70.0
42		70.0	70.0	70.0	70.0	70.0	70.0	70.0	70.0	70.0	66.3	70.0	62.9	70.0	56.7	70.0	48.3	70.0	70.0	43.9	65.9	70.0
48		62.8	70.0	70.0	69.9	70.0	62.8	70.0	64.8	70.0	58.0	70.0	55.0	70.0	49.6	70.0	42.3	63.4	70.0	38.4	57.7	70.0
50		60.3	70.0	70.0	67.1	70.0	60.3	70.0	62.2	70.0	55.7	70.0	52.8	70.0	47.6	70.0	40.6	60.9	70.0	36.9	55.4	70.0
30	108	70.0	70.0	70.0	70.0	70.0	70.0	70.0	70.0	70.0	70.0	70.0	70.0	70.0	70.0	70.0	63.9	70.0	70.0	58.1	70.0	70.0
36		70.0	70.0	70.0	70.0	70.0	70.0	70.0	70.0	70.0	70.0	70.0	69.3	70.0	62.5	70.0	53.2	70.0	70.0	48.4	70.0	70.0
42		67.8	70.0	70.0	70.0	70.0	67.8	70.0	69.9	70.0	62.6	70.0	59.4	70.0	53.5	70.0	45.6	68.5	70.0	41.5	62.2	70.0
48		59.3	70.0	70.0	66.0	70.0	59.3	70.0	61.2	70.0	54.8	70.0	52.0	77.9	46.8	70.0	39.9	59.9	70.0	36.3	54.5	70.0

SEE CHART ON SHEET 2 FOR DESIGN LOAD CAPACITY OF DESIRED GLASS SIZE.

SEE CHART ABOVE FOR HEAD/SILL ANCHOR CAPACITY.

FOR FREE STANDING JAMB CAPACITY SEE CHART ON SHEET 7.

LOWER DESIGN PRESSURES FROM DOOR DESIGN LOAD CHART OR ANCHOR CHARTS WILL APPLY TO ENTIRE SYSTEM.

Sealed: 7/21/2023

FL #38057

JALAL FAROOQ LICENSE No. 81223 STATE OF FLORIDA PROFESSIONAL ENGINEER

AL-FAROOQ CORPORATION
ENGINEERS & PRODUCT DEVELOPMENT
9360 SUNSET DRIVE, SUITE 220
MIAMI, FLORIDA 33173 (C.A.N. 3538)
TEL. (305) 264-8100 FAX. (305) 262-6978

COMP-ANL\21-20F-MG

MG-1500 ALUM SLIDING GLASS DOOR (S.M.I.)

MR-GLASS DOORS & WINDOWS MANUFACTURING, LLC
8051 N.W. 79th Place
Medley, FL. 33166
Tel. (305) 764-3963 Fax. (305) 470-8285

revisions:

no	date	by	description

date: 03-11-21 | scale: 3/8" = 1" | dr. by: TARIQ | chk. by:

drawing no. 21-20F

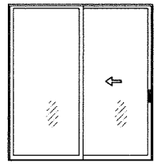

OX (SHOWN)
XO



XX (SHOWN)

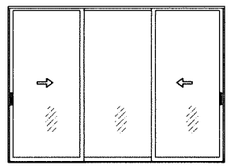

XOX (SHOWN)

XXO (SHOWN)
OXX

OXXX (SHOWN)
XXXO
OXXO

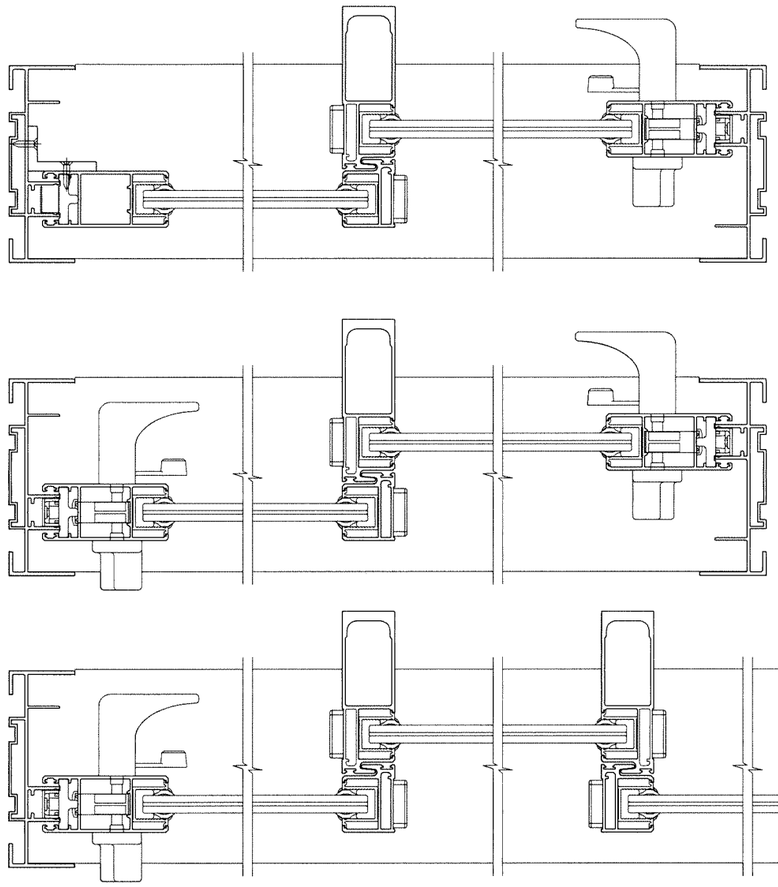

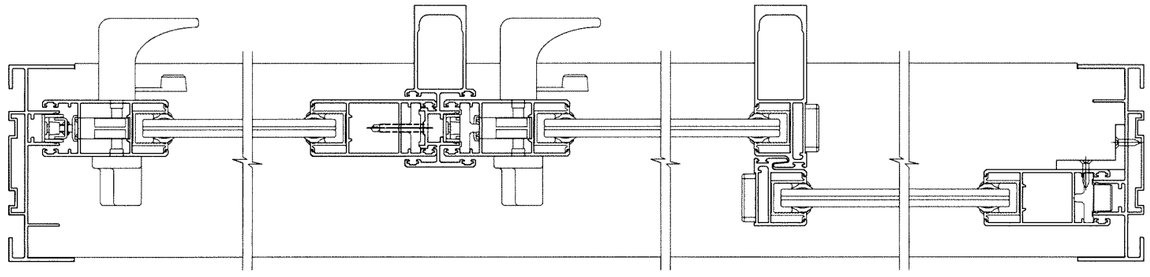

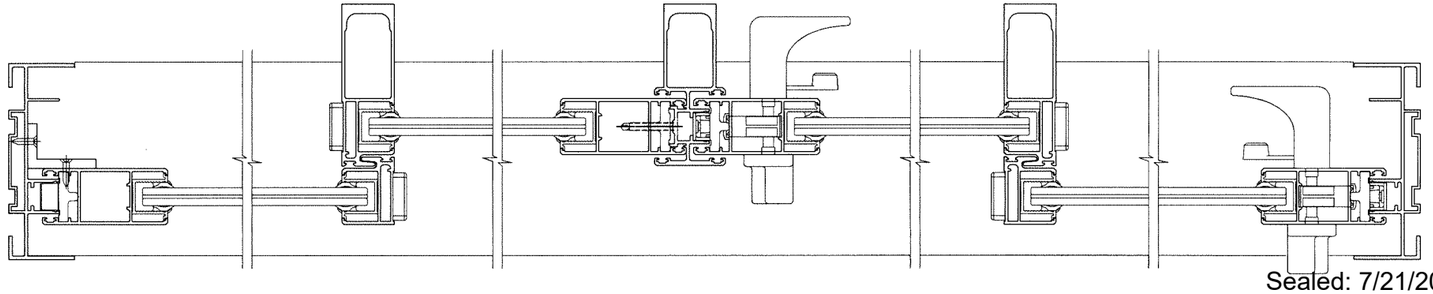

NOTE:

1. CONFIGURATIONS SHOWN FOR ILLUSTRATION PURPOSES ONLY.
2. FOR APPLICABLE DESIGN PRESSURES SEE SHEETS 2 & 3.
3. FOR ANCHOR DETAILS SEE SHEETS 5 THRU 8.

APPROVED CONFIGURATIONS

Sealed: 7/21/2023

FL #38057

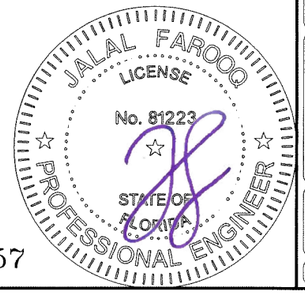

AL-FAROOQ CORPORATION
ENGINEERS & PRODUCT DEVELOPMENT
9360 SUNSET DRIVE, SUITE 220
MIAMI, FLORIDA 33173 *(C.A.N. 3538)*
TEL. (305) 264-8100 FAX. (305) 262-6978

afc

COMP-ANL\21-20F-MG

MG-1500 ALUM SLIDING GLASS DOOR (S.M.I.)

MR-GLASS DOORS & WINDOWS MANUFACTURING, LLC
8051 N.W. 79th Place
Medley, FL. 33166
Tel. (305) 764-3963 Fax. (305) 470-8285

revisions:

no	date	by	description

date: 03-11-21
scale: 3/8" = 1"
dr. by: TARIQ
chk. by:

drawing no. 21-20F

sheet 4 of 11

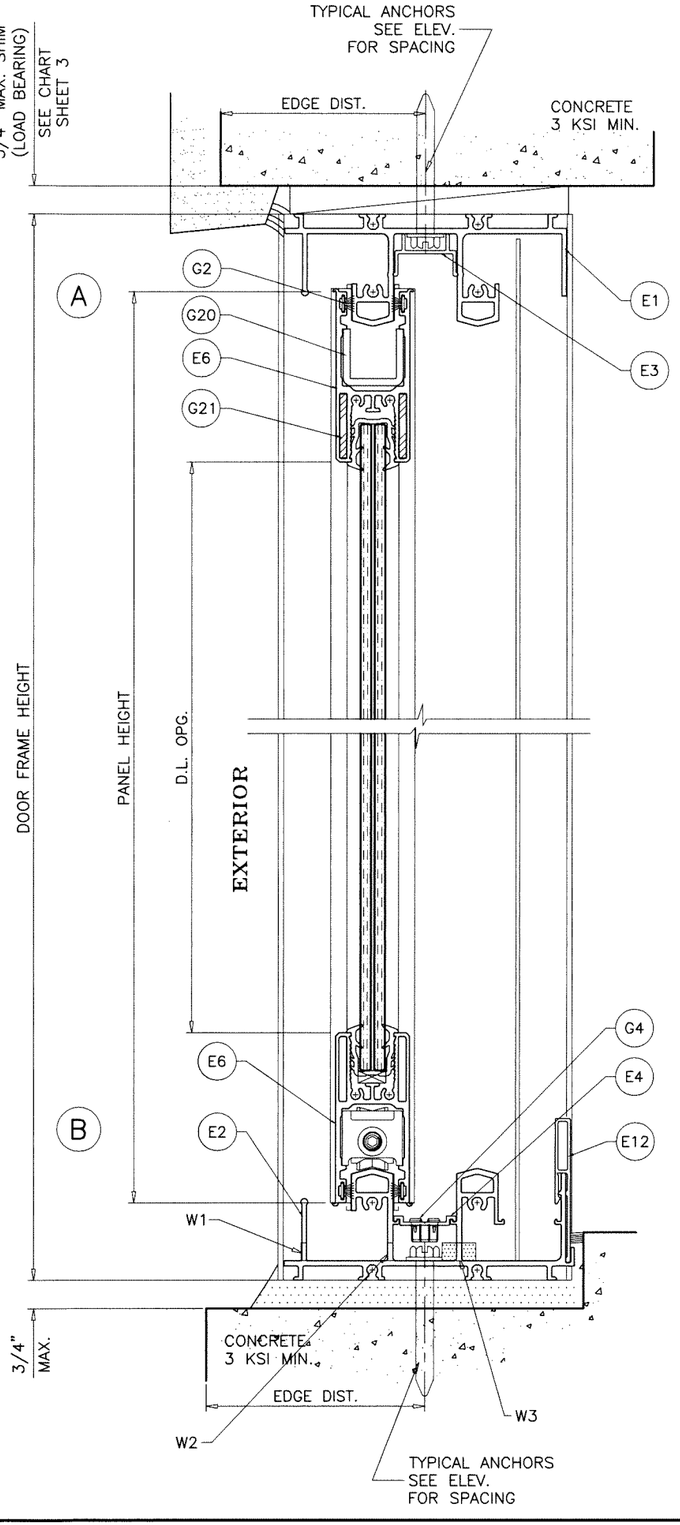

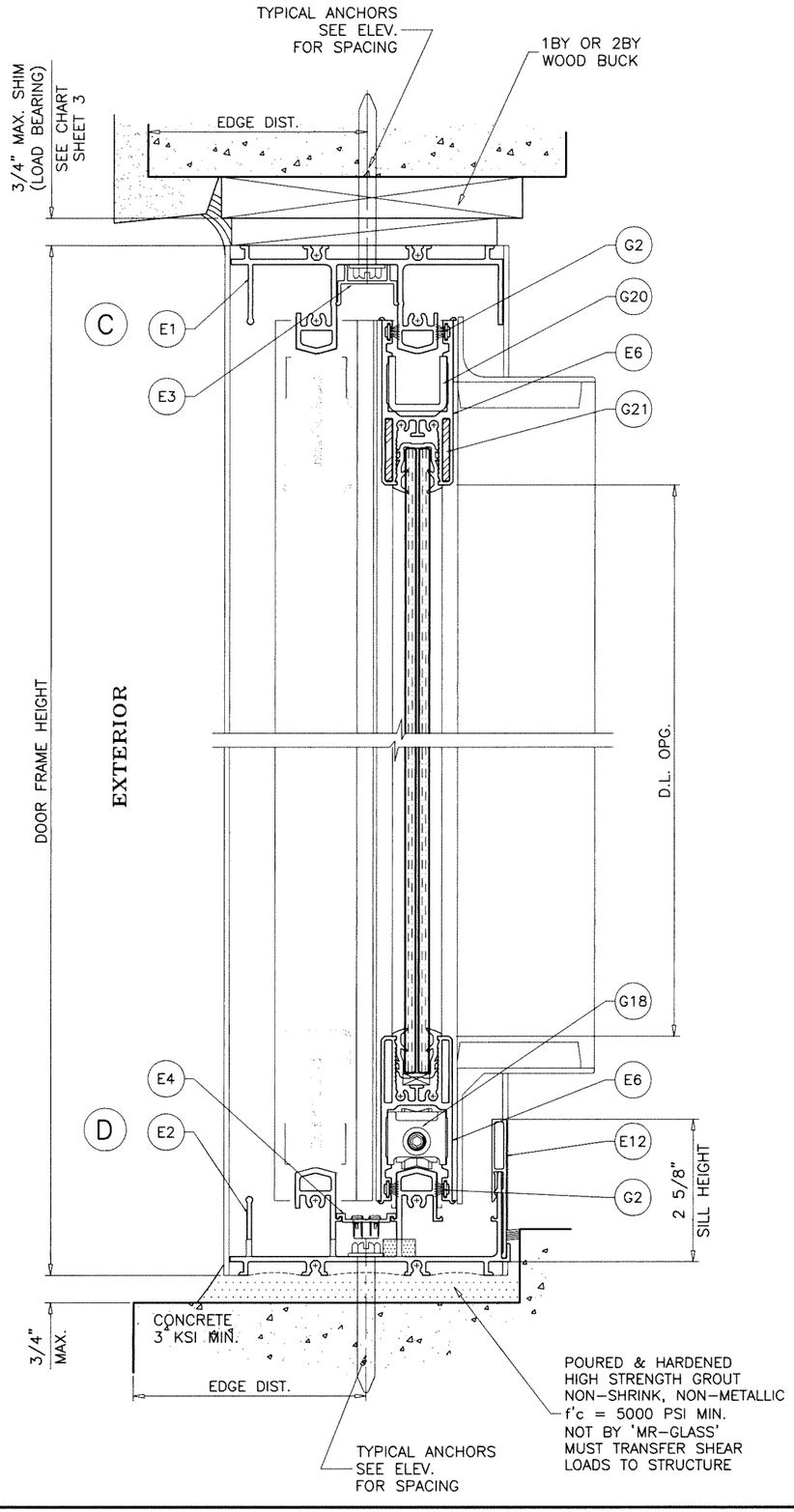

WEEPHOLES:

W1 = EXTERIOR LEG CUT 3-1/2" ON EACH END
3"W X 1/4"H WEEP SLOTS AT 24" O.C.

W2 = 1-3/8"W X 1/4"H WEEP SLOTS AT 12" O.C.

W3 = 1-3/8"W X 1/4"H WEEP SLOTS AT 12" O.C.
WITH RETICULATED FOAM.

Sealed: 7/21/2023

FL #38057

JALAL FAROOQ
LICENSE
No. 81223
STATE OF FLORIDA
PROFESSIONAL ENGINEER

AL-FAROOQ CORPORATION
ENGINEERS & PRODUCT DEVELOPMENT
9360 SUNSET DRIVE, SUITE 220
MIAMI, FLORIDA 33173 (C.A.N. 3538)
TEL. (305) 264-8100 FAX. (305) 262-6978

COMP-ANL\21-20F-MG

MG-1500 ALUM SLIDING GLASS DOOR (S.M.I.)

MR-GLASS DOORS & WINDOWS MANUFACTURING, LLC
8051 N.W. 79th Place
Medley, FL. 33166
Tel. (305) 764-3963 Fax. (305) 470-8285

revisions:

no	date	by	description

date: 03-11-21
scale: 3/8" = 1"
dr. by: TARIQ
chk. by:

drawing no. 21-20F

sheet 5 of 11

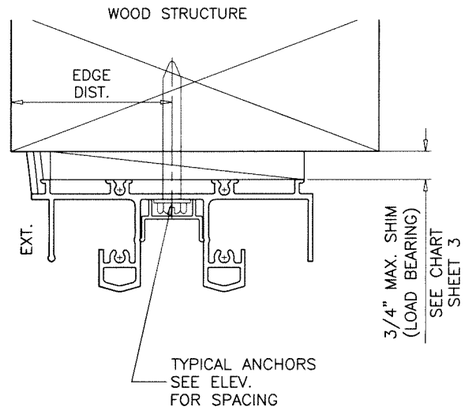

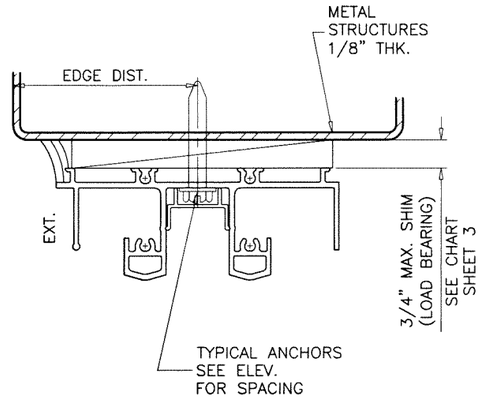

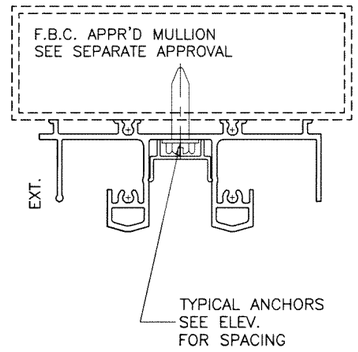

1BY OR 2BY WOOD BUCKS AND METAL STRUCTURE NOT BY 'MR-GLASS' MUST SUSTAIN LOADS IMPOSED BY GLAZING SYSTEM AND TRANSFER THEM TO THE BUILDING STRUCTURE.

TYPICAL ANCHORS: SEE ELEV. FOR SPACING

TYPE 'A'- 5/16" DIA. ULTRACON BY 'DEWALT' (Fu=177 KSI, Fy=155 KSI)

INTO WOOD STRUCTURES
1-7/8" MIN. PENETRATION INTO WOOD (HEAD/JAMBS)

THRU 1BY OR 2BY BUCKS INTO CONC. OR BLOCKS
1-1/4" MIN. EMBED INTO CONCRETE (HEAD)
1-1/4" MIN. EMBED INTO CONC. OR BLOCKS (JAMBS)

DIRECTLY INTO CONC. OR BLOCKS
1-3/4" MIN. EMBED INTO CONCRETE (JAMBS)
1-3/4" MIN. EMBED INTO GROUT-FILLED BLOCKS (JAMBS)

TYPE 'B'- 5/16" DIA. ULTRACON BY 'DEWALT' (Fu=177 KSI, Fy=155 KSI)

DIRECTLY INTO CONCRETE
1-3/4" MIN. EMBED (HEAD/SILL)

TYPE 'C'- 5/16" DIA. TEKS OR SELF DRILLING SCREWS (GRADE 5 CRS)

INTO F.B.C. APPROVED MULLIONS
OR
INTO METAL STRUCTURES (HEAD/JAMBS)
(3) THREADS MIN. TO EXTEND BEYOND METAL THICKNESS
ALUMINUM: 1/8" THK. MIN. (6063-T5 MIN.)
STEEL: 1/8" THK. MIN. (Fy = 36 KSI MIN.)
(STEEL IN CONTACT WITH ALUMINUM TO BE PLATED OR PAINTED)

TYPICAL EDGE DISTANCE

INTO CONCRETE AT HEAD/SILL = 2-3/16" MIN.
INTO CONCRETE AND BLOCKS AT JAMBS = 2-1/2" MIN.
INTO WOOD STRUCTURE = 1-1/4" MIN.
INTO METAL STRUCTURE = 3/4" MIN.

WOOD AT HEAD OR JAMBS SG = 0.55 MIN.
CONCRETE AT HEAD, SILL OR JAMBS f'c = 3000 PSI MIN.
C-90 HOLLOW/FILLED BLOCK AT JAMBS f'm = 2000 PSI MIN.

Sealed: 7/21/2023

FL #38057

JALAL FAROOQ LICENSE No. 81223 STATE OF FLORIDA PROFESSIONAL ENGINEER

afc
AL-FAROOQ CORPORATION
ENGINEERS & PRODUCT DEVELOPMENT
9360 SUNSET DRIVE, SUITE 220
MIAMI, FLORIDA 33173 (C.A.N. 3538)
TEL. (305) 264-8100 FAX. (305) 262-6978

COMP-ANL\21-20F-MG

MG-1500 ALUM SLIDING GLASS DOOR (S.M.I.)

MR-GLASS DOORS & WINDOWS MANUFACTURING, LLC
8051 N.W. 79th Place
Medley, FL. 33166
Tel. (305) 764-3963 Fax. (305) 470-8285

revisions:		
no	date	by description

date: 03-11-21
scale: 3/8" = 1"
dr. by: TARIQ
chk. by:

drawing no. 21-20F

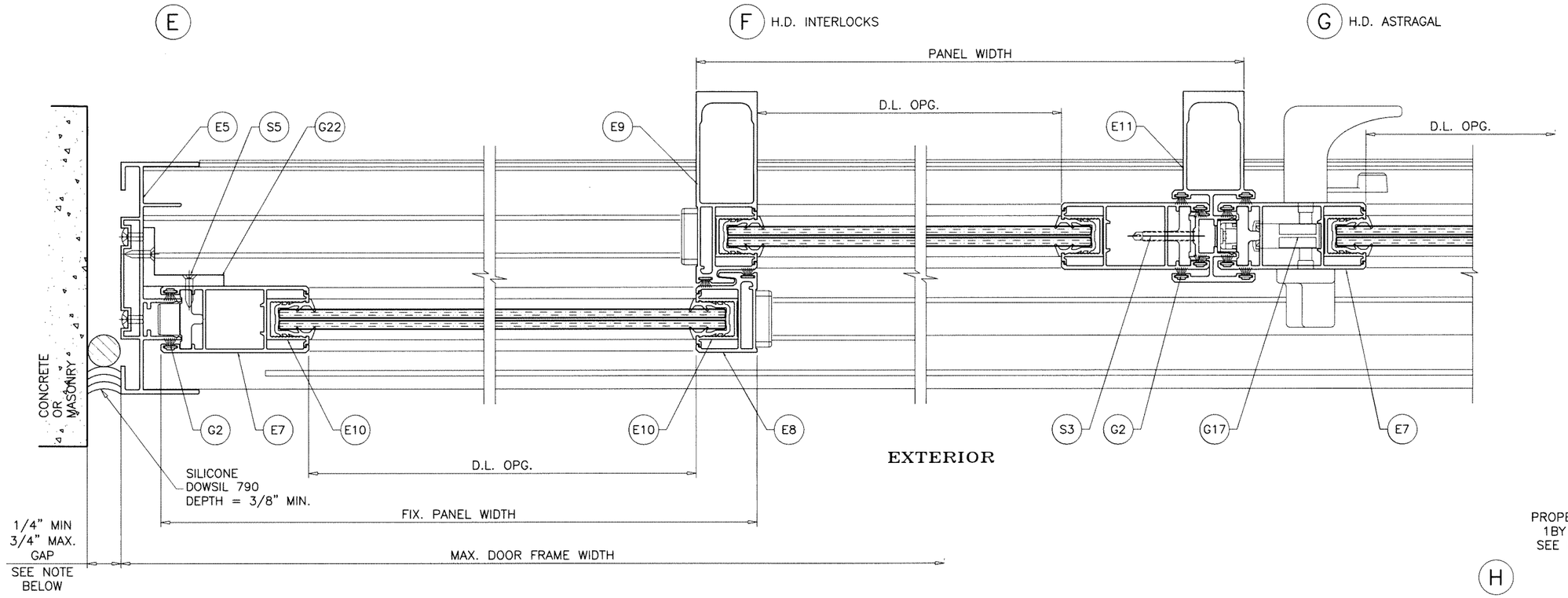

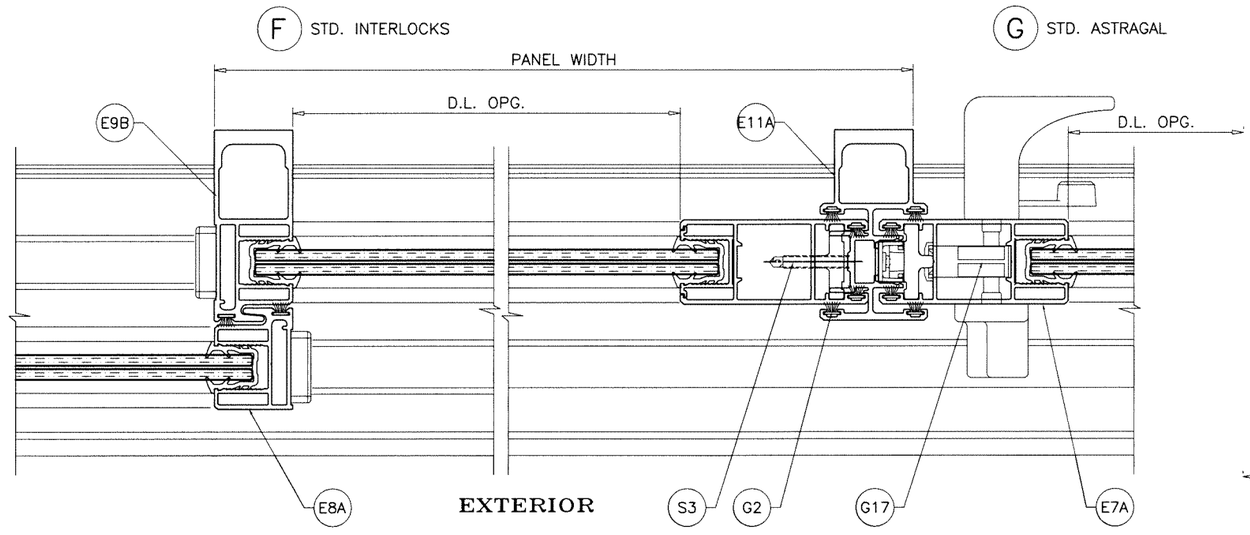

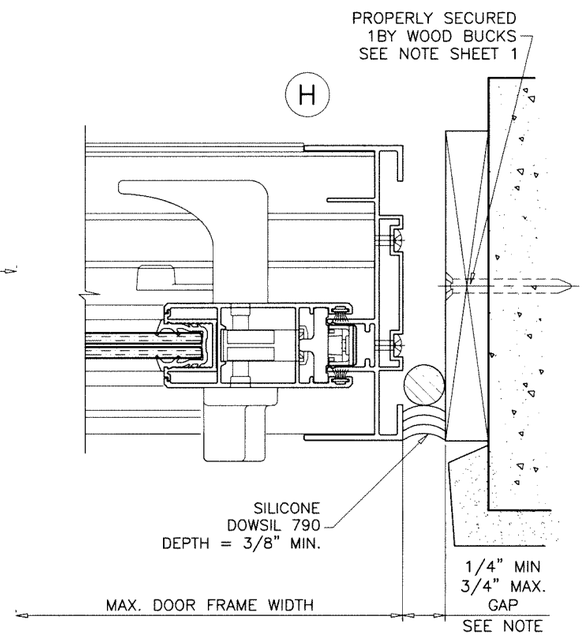

MAX. FRAME HEIGHT	GAP	
	MIN.	MAX.
84"	1/4"	3/4"
96"	5/16"	3/4"
108"	3/8"	3/4"

NOTE:
MAX. MOVEMENT CONSIDERED=100% STRETCH.
PLEASE REFER TO SEALANT MANUFACTURER'S DATA AND APPLICATION MANUAL FOR COMPATABILITY OF SEALANT TO SUBSTRATE & WINDOWALL MATERIAL/FINISH AND COMPLIANCE FOR WARRANTY.
REFER TO ACI-117-10 FOR CONSTRUCTION TOLERANCES.

ALTERNATE SEALANTS AT JAMB GAPS CAN BE DESIGNED BY ENGINEER OF RECORD BASED ON MANUFACTURER GUIDE LINES.

GAPS LESS THAN 1/4" MAY BE DESIGNED BY ENGINEER OF RECORD BY THE USE OF BOND BREAKER TAPE OR 15% OF GAP ALLOWED MOVEMENT.

Sealed: 7/21/2023

FL #38057

JALAL FAROOQ LICENSE No. 61223 STATE OF FLORIDA PROFESSIONAL ENGINEER

AL-FAROOQ CORPORATION
ENGINEERS & PRODUCT DEVELOPMENT
9360 SUNSET DRIVE, SUITE 220
MIAMI, FLORIDA 33173 (C.A.N. 3538)
TEL. (305) 264-8100 FAX. (305) 262-6978

COMP-ANL\21-20F-MG

MG-1500 ALUM SLIDING GLASS DOOR (S.M.I.)

MR-GLASS DOORS & WINDOWS MANUFACTURING, LLC
8051 N.W. 79th Place
Medley, FL. 33166
Tel. (305) 764-3963 Fax. (305) 470-8285

revisions:

no	date	by	description

date: 03-11-21
scale: 3/8" = 1"
dr. by: TARIQ
chk. by:

drawing no. 21-20F

sheet 7 of 11

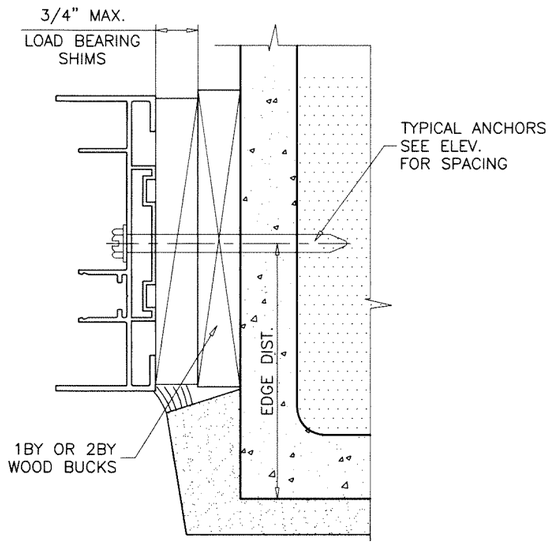

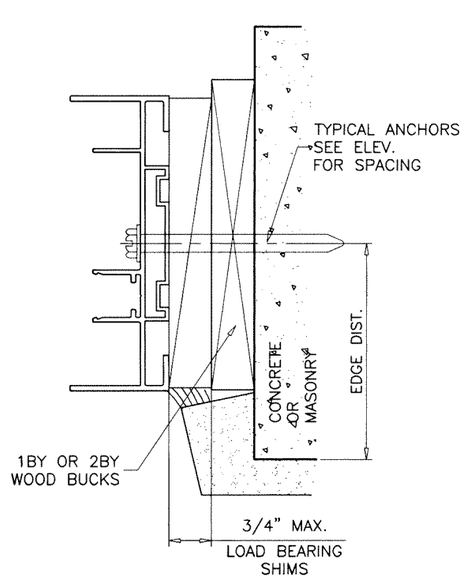

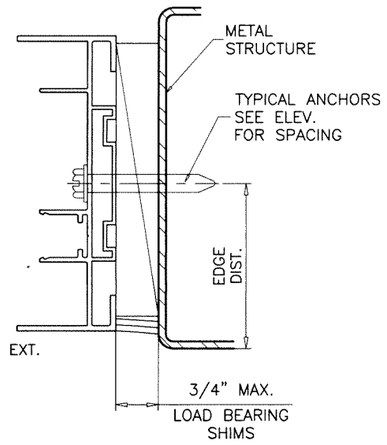

H1

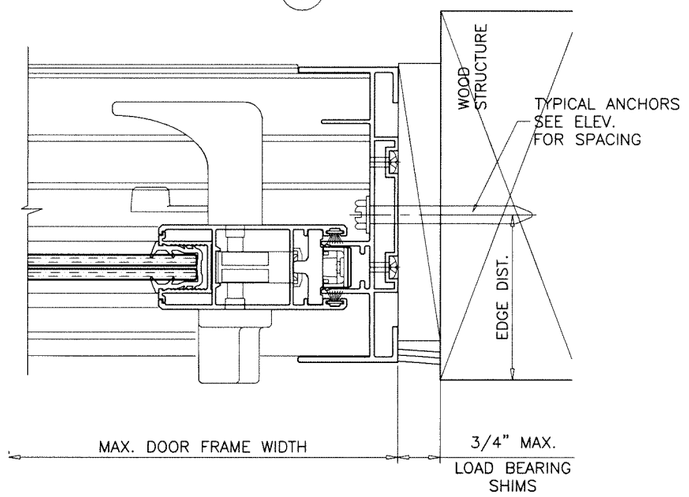

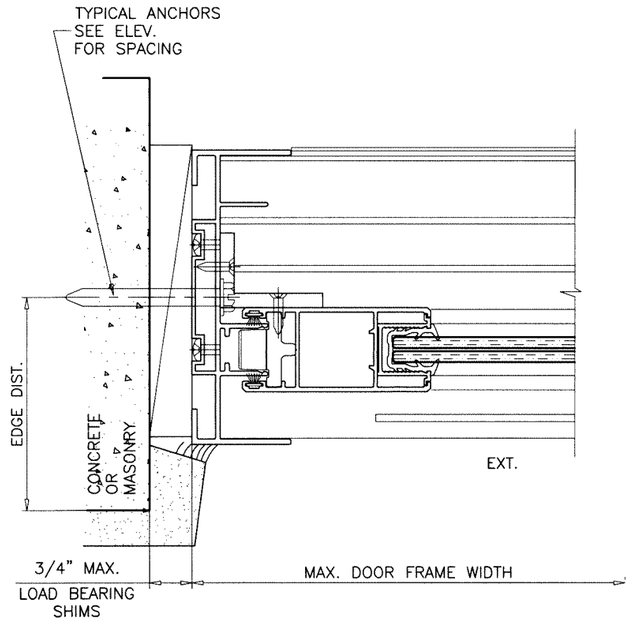

Sealed: 7/21/2023

FL #38057

AL-FAROOQ CORPORATION
ENGINEERS & PRODUCT DEVELOPMENT
9360 SUNSET DRIVE, SUITE 220
MIAMI, FLORIDA 33173 (C.A.N. 3538)
TEL. (305) 264-8100 FAX. (305) 262-6978

COMP-ANL\21-20F-MG

MG-1500 ALUM SLIDING GLASS DOOR (S.M.I.)

MR-GLASS DOORS & WINDOWS MANUFACTURING, LLC
8051 N.W. 79th Place
Medley, FL. 33166
Tel. (305) 764-3963 Fax. (305) 470-8285

revisions:

no	date	by	description

date: 03-11-21
scale: 3/8" = 1"
dr. by: TARIQ
chk. by:

drawing no. 21-20F

sheet 8 of 11

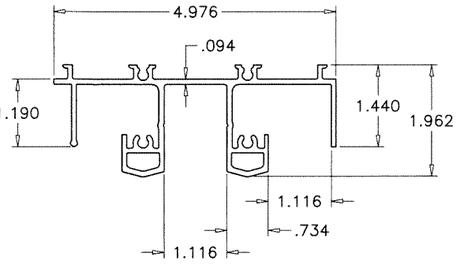

E1 FRAME HEAD

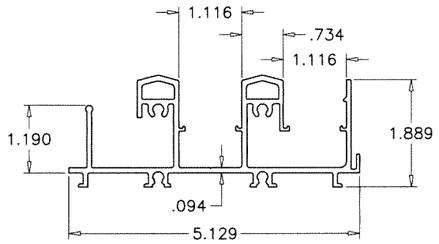

E2 FRAME SILL

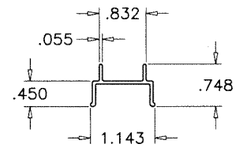

E3 FRAME HEAD COVER

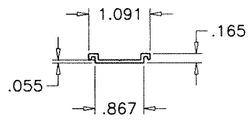

E4 FRAME SILL COVER

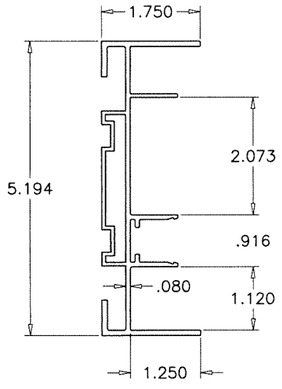

E5 FRAME JAMB

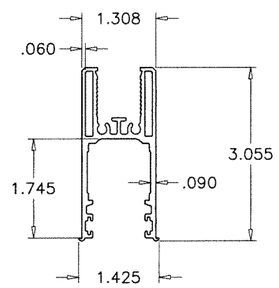

E6 PANEL TOP/BOTTOM RAIL

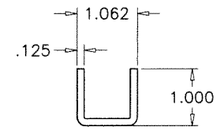

G20 TOP RAIL END CHANNEL

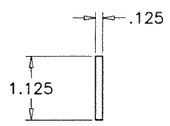

G21 TOP RAIL END BAR

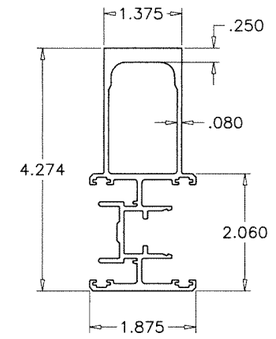

E11 H.D. ASTRAGAL STILE

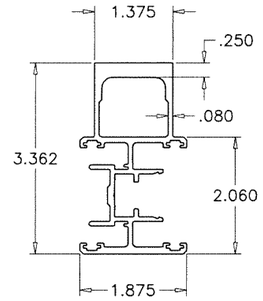

E11A STD. ASTRAGAL STILE

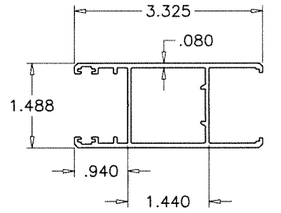

E7 LOCK STILE (W/ ADAPTER)

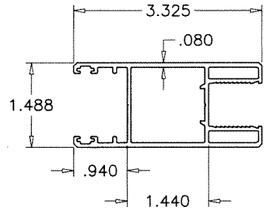

E7A LOCK STILE (W/O ADAPTER)

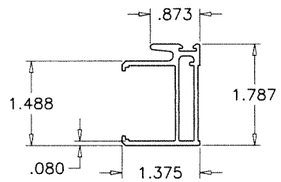

E8 EXT. INTERLOCK (W/ ADAPTER)

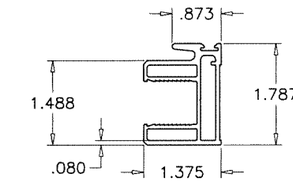

E8A EXT. INTERLOCK (W/O ADAPTER)

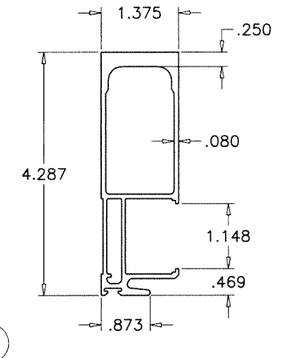

E9 H.D. INT. INTERLOCK (W/ ADAPTER)

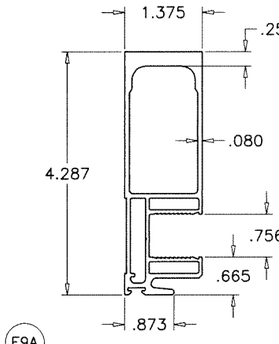

E9A H.D. INT. INTERLOCK (W/O ADAPTER)

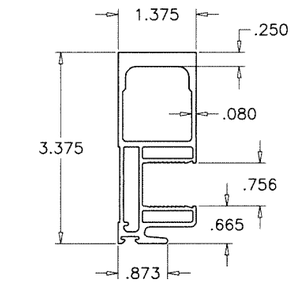

E9B STD. INT. INTERLOCK (W/O ADAPTER)

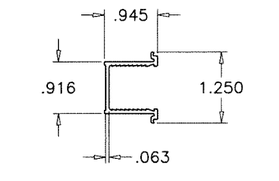

E10 GLASS ADAPTER

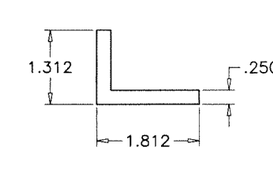

G22 FIX. PANEL CLIP

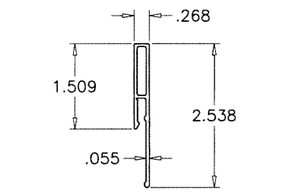

E12 SILL RISER

AL-FAROOQ CORPORATION
ENGINEERS & PRODUCT DEVELOPMENT
9360 SUNSET DRIVE, SUITE 220
MIAMI, FLORIDA 33173 (C.A.N. 3538)
TEL. (305) 264-8100 FAX. (305) 262-6978

COMP-ANL\21-20F-MG

MG-1500 ALUM SLIDING GLASS DOOR (S.M.I.)

MR-GLASS DOORS & WINDOWS MANUFACTURING, LLC
8051 N.W. 79th Place
Medley, FL. 33166
Tel. (305) 764-3963 Fax. (305) 470-8285

revisions:

no	date	by	description

date: 03-11-21
scale: 3/8" = 1"
dr. by: TARIQ
chk. by:

drawing no. 21-20F

sheet 9 of 11

Sealed: 7/21/2023

FL #38057

JALAL FAROOQ LICENSE No. 81223 STATE OF FLORIDA PROFESSIONAL ENGINEER

ITEM #	PART #	QUANTITY	DESCRIPTION	MATERIAL	MANF./SUPPLIER/REMARKS
E1	E1503	1	FRAME HEAD	6063–T6	–
E2	E1501	1	FRAME SILL	6063–T6	–
E3	E1522	AS REQD.	FRAME HEAD COVER	6063–T5	OPTIONAL
E4	E1520	AS REQD.	FRAME SILL COVER	6063–T5	OPTIONAL
E5	E1502	2	FRAME JAMB	6063–T6	–
E6	E1510	2/ PANEL	PANEL TOP/BOTTOM RAIL	6063–T6	–
E7	E1511	AS REQD.	LOCK STILE (WITH GLASS ADAPTER)	6063–T6	–
E7A	E1511A	AS REQD.	LOCK STILE (WITHOUT GLASS ADAPTER)	6063–T6	–
E8	E1512	AS REQD.	EXTERIOR INTERLOCK (WITH GLASS ADAPTER)	6063–T6	–
E8A	E1512A	AS REQD.	EXTERIOR INTERLOCK (WITHOUT GLASS ADAPTER)	6063–T6	–
E9	E1513	AS REQD.	H.D. INTERIOR INTERLOCK (WITH GLASS ADAPTER)	6063–T6	–
E9A	E1513A	AS REQD.	H.D. INTERIOR INTERLOCK (WITHOUT GLASS ADAPTER)	6063–T6	–
E9B	E1515A	AS REQD.	STD. INTERIOR INTERLOCK (WITHOUT GLASS ADAPTER)	6063–T6	–
E10	E1517	AS REQD.	GLASS ADAPTER	6063–T6	–
E11	E1514	AS REQD.	H.D. ASTRAGAL STILE	6063–T6	–
E11A	E1516	AS REQD.	STD. ASTRAGAL STILE	6063–T6	–
E12	E1521	AS REQD.	SILL RISER	6063–T5	–
G1	G15–015	AS REQD.	GLAZING GASKET	SANTOPRENE	DUROMETER 65±5 SHORE A
G2	G15–02	AS REQD.	PILE W'STRIPPING	POLYETHYLENE/YARN	–
G3	G15–12	AS REQD.	BALL VALVE	–	–
G4	G15–12	AS REQD.	HOLE PLUG	PVC	–
G5	G15–15	AS REQD.	GASKET	NEOPRENE	–
G6	M10–05	AS REQD.	EXTERIOR BUMPER	–	–
G7	M15–01	AS REQD.	LOCK STILE COVER	POLYAMIDE	–
G8	M15–02	AS REQD.	–	–	–
G9	M15–03	AS REQD.	LOCK STILE GUIDE	POLYAMIDE	–
G10	–	AS REQD.	PANEL BUMPER	NEOPRENE	–
G11	M15–04	AS REQD.	INTERLOCK COVER	POLYAMIDE	–
G12	M15–05	AS REQD.	INTERLOCK COVER	POLYAMIDE	–
G13	M15–06	AS REQD.	INTERLOCK COVER/GUIDE	POLYAMIDE	–
G14	M15–07	AS REQD.	INTERLOCK CAP	POLYAMIDE	–
G15	M15–09	AS REQD.	ASTRAGAL CAP	POLYAMIDE	–
G16	M15–11	AS REQD.	ASTRAGAL COVER	POLYAMIDE	–
G17	L15–01	–	2 POINT MORTISE LOCK & HANDLE	ZAMAK	INTERLOCK
G18	M15–20	2/ MOV. PANEL	ROLLER ASSEMBLY AT 9" FROM ENDS	ST. STEEL/ACETAL	FASTENED WITH (2) 12–24 X 3/4" PH MS
G19	–	AS REQD.	SETTING BLOCKS	EPDM	DUROMETER 80±5 SHORE A
G20	–	AS REQD.	TOP RAIL END CHANNEL, 4" LONG AT PANEL ENDS	6063–T6	–
G21	–	AS REQD.	TOP RAIL END BAR, 4" LONG AT PANEL ENDS	6063–T6	–
G22	–	2/ FIX. PANEL	FIXED PANEL CLIP, 1–7/8" LONG, AT 4" FROM TOP & BOTTOM	6063–T6	–
S1	#12 X 1 1/2"	4/ CORNER	FRAME ASSEMBLY FASTENERS	ST. STEEL	PH SDS
S2	#10 X 1 1/2"	4/ CORNER	PANEL ASSEMBLY FASTENERS	ST. STEEL	PH SDS
S3	#12 X 1 1/2"	AS REQD.	ASTRAGAL FASTENERS, AT 3–1/2" FROM ENDS & 8" O.C.	ST. STEEL	FH SDS
S4	#10 X 1"	AS REQD.	BALL VALVE FASTENERS	ST. STEEL	PH SMS
S5	#10 X 1"	2/ CLIP	FIX. CLIP FASTENERS	ST. STEEL	FH SMS

SEALANT:

ALL JOINTS AND FRAME CONNECTIONS SEALED WITH WHITE/ALUMINUM COLORED SILICONE.

LOCKS:

SURFACE MOUNT METALLIC THREE PLY DUAL HOOK LOCK
AT 38–1/2" FROM BOTTOM
FASTENED TO LOCK STILE WITH
(2) 10–24 X 1/2" FH TC MS

SURFACE MOUNT METALLIC HANDLE AT 38–1/2" FROM BOTTOM
FASTENED TO LOCK STILE WITH
(2) 8–32 X 2–5/8" FH MS

SURFACE MOUNT METALLIC KEEPER FACING LOCK AT 38 1/2" FROM BOTTOM
FASTENED WITH
(1) #14 X 2–7/8" FH SDS AND
(1) 12–24 X 1/2" PH MS

Sealed: 7/21/2023

FL #38057

JALAL FAROOQ LICENSE No. 81223 STATE OF FLORIDA PROFESSIONAL ENGINEER

afc
AL-FAROOQ CORPORATION
ENGINEERS & PRODUCT DEVELOPMENT
9360 SUNSET DRIVE, SUITE 220
MIAMI, FLORIDA 33173 (C.A.N. 3538)
TEL. (305) 264-8100 FAX. (305) 262-6978

COMP–ANL\21–20F–MG

MG–1500 ALUM SLIDING GLASS DOOR (S.M.I.)

MR–GLASS DOORS & WINDOWS MANUFACTURING, LLC
8051 N.W. 79th Place
Medley, FL. 33166
Tel. (305) 764–3963 Fax. (305) 470–8285

revisions:

no	date	by	description

date: 03–11–21
scale: 3/8" = 1"
dr. by: TARIQ
chk. by:

drawing no. 21–20F

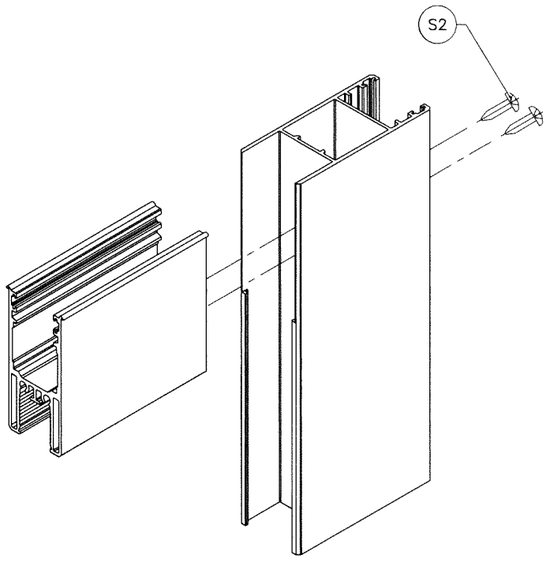

PANEL TOP/BOTTOM CORNER

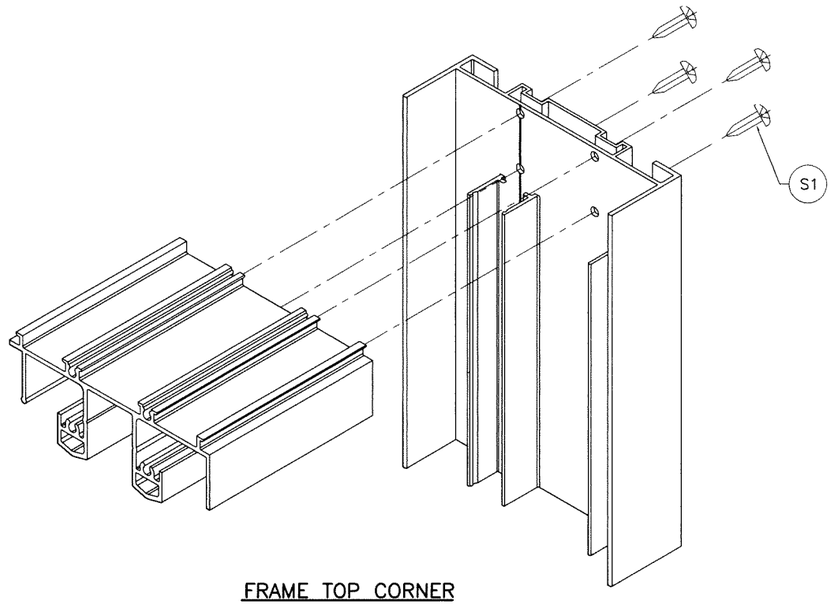

FRAME TOP CORNER

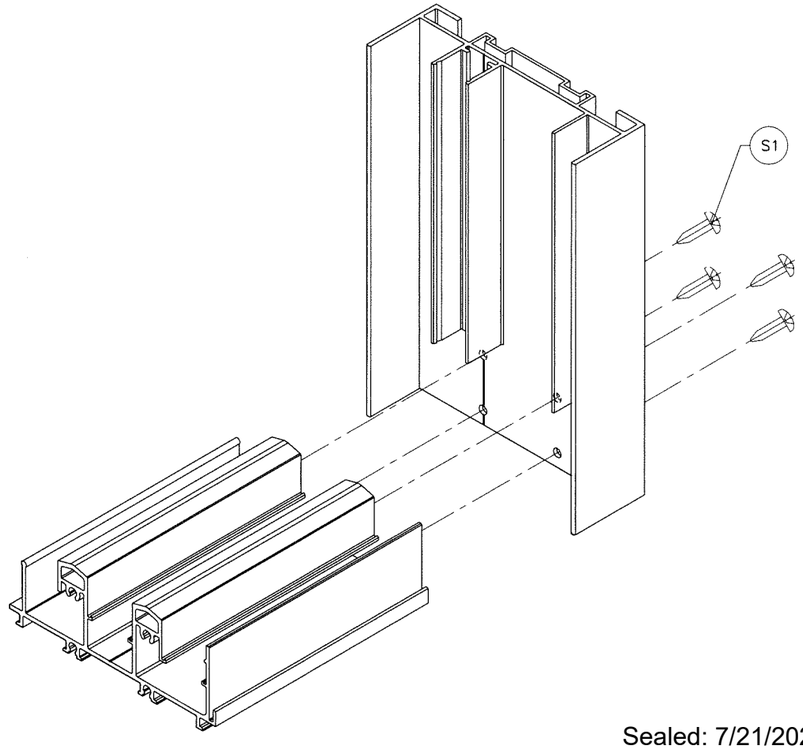

FRAME BOTTOM CORNER

Sealed: 7/21/2023

FL #38057

JALAL FAROOQ LICENSE No. 81223 STATE OF FLORIDA PROFESSIONAL ENGINEER

AL-FAROOQ CORPORATION
ENGINEERS & PRODUCT DEVELOPMENT
9360 SUNSET DRIVE, SUITE 220
MIAMI, FLORIDA 33173 (C.A.N. 3538)
TEL. (305) 264-8100 FAX. (305) 262-6978

COMP-ANL\21-20F-MG

MG-1500 ALUM SLIDING GLASS DOOR (S.M.I.)

MR-GLASS DOORS & WINDOWS MANUFACTURING, LLC
8051 N.W. 79th Place
Medley, FL. 33166
Tel. (305) 764-3963 Fax. (305) 470-8285

revisions:

no	date	by	description

date: 03-11-21 | scale: 3/8" = 1" | dr. by: TARIQ | chk. by:

drawing no. 21-20F

sheet 11 of 11