EVALUATION REPORT OF
KIRBY BUILDING SYSTEMS
'LOC-SEAM 90 PANEL'

FLORIDA BUILDING CODE 8TH EDITION (2023)
FLORIDA PRODUCT APPROVAL
FL 38033.2-R2
STRUCTURAL COMPONENTS
ROOF DECK

Prepared For:
Kirby Building Systems
124 Kirby Drive
Portland, TN 37148
Telephone: (615) 325-4165

Prepared By:
Bala Sockalingam, Ph.D., P.E.
Florida Professional Engineer #62240
1216 N Lansing Ave., Suite C
Tulsa, OK 74106
Telephone: (918) 492-5992

This report consists of
Evaluation Report (3 Pages including cover)
Installation Details (5 Pages)

Report No. C2890-2
Date: 3.22.2025

BALA SOCKALINGAM
LICENSE
No. 62240
STATE OF
FLORIDA
PROFESSIONAL ENGINEER

This item has been digitally signed and sealed by Bala Sockalingam, PE, on the date indicated.

Printed copies of this document are not considered signed and sealed and this signature must be verified on any electronic copies.

2025.03.22
10:27:39 -05'00'

Manufacturer:	Kirby Building Systems
Manufacturing Location:	600 Apache Trail, Terrell, TX 75160
Product Name:	Loc-Seam 90 Panel
Panel Description:	Standing seam panel with max. 16" wide coverage and 2" high ribs with 90° panel seam
Materials:	Min 24 ga. with galvalume coated steel (ASTM A792) (F_y = 50 ksi). Corrosion resistant as per FBC 2023 Section 1507.4.3.
Support Description:	Min. 18 ga., 50 ksi steel section (Must be designed by others)
Slope:	1/4:12 or greater in accordance with FBC 2023 Section 1507.4.2
Design Uplift Pressure: (Factor of Safety = 2)	52.5 psf @ maximum support spacing of 60.25" o.c.
Panel Attachment:	LSBC-1 or Loc-Seam Expansion Clip Fastened to 18 ga. supports with min (2) #12-14 x 1-1/4" long SDS Fastened to min. 16 ga. supports with (1) #12-14 x 1-1/4" long SDS Clips and fasteners are corrosion resistant as per FBC 2023 Section 1506.7 and 1507.4.4, respectively.
Optional Attachment:	May be fastened to supports through bearing plate, rigid insulation and liner panel with #12-14 or #14-14 Type AB self-drilling, self-tapping hex head screws. Minimum length must be equal to combined thickness of liner panel and rigid insulation plus 3/4". Fasteners are corrosion resistant as per FBC 2023 Section 1507.4.4.
Test Standards:	Roof assembly tested in accordance with UL580-06 'Uplift Resistance of Roof Assemblies' and FM 4471 Section 5.4 'Resistance to Foot Traffic'.
Code Compliance:	The product described herein has demonstrated compliance with FBC 2023 Section 1507.4.
Product Limitations:	Design wind loads shall be determined for each project in accordance with FBC 2023 Section 1609 or ASCE 7-22 using allowable stress design. The maximum support spacing listed herein shall not be exceeded. The design uplift pressure for reduced support spacing may be computed using rational analysis prepared by a Florida Professional Engineer. This product is not approved for use in the High Velocity Hurricane Zone. Fire classification is not within the scope of this Evaluation Report. Refer to FBC 2023 Section 1505 and current approved roofing materials directory for fire ratings of this product.

Supporting Documents: UL 580 Roof Deck Construction No. 332

FM 4471 Test Report
FM Approvals
Project ID 3000525, Reporting Date 9/2/1999

(Kirby Building Systems is authorized to use Nucor Building Group's Test Reports)

Design/System/Construction/Assembly Usage Disclaimer

- Authorities Having Jurisdiction should be consulted in all cases as to the particular requirements covering the installation and use of UL Certified products, equipment, system, devices, and materials.
- Authorities Having Jurisdiction should be consulted before construction.
- Fire resistance assemblies and products are developed by the design submitter and have been investigated by UL for compliance with applicable requirements. The published information cannot always address every construction nuance encountered in the field.
- When field issues arise, it is recommended the first contact for assistance be the technical service staff provided by the product manufacturer noted for the design. Users of fire resistance assemblies are advised to consult the general Guide Information for each product category and each group of assemblies. The Guide Information includes specifics concerning alternate materials and alternate methods of construction.
- Only products which bear UL's Mark are considered Certified.

Roof Deck Constructions

See General Information for Roof Deck Constructions

Construction No. 332

December 4, 2023

Uplift — Class 90
Fire Not Investigated

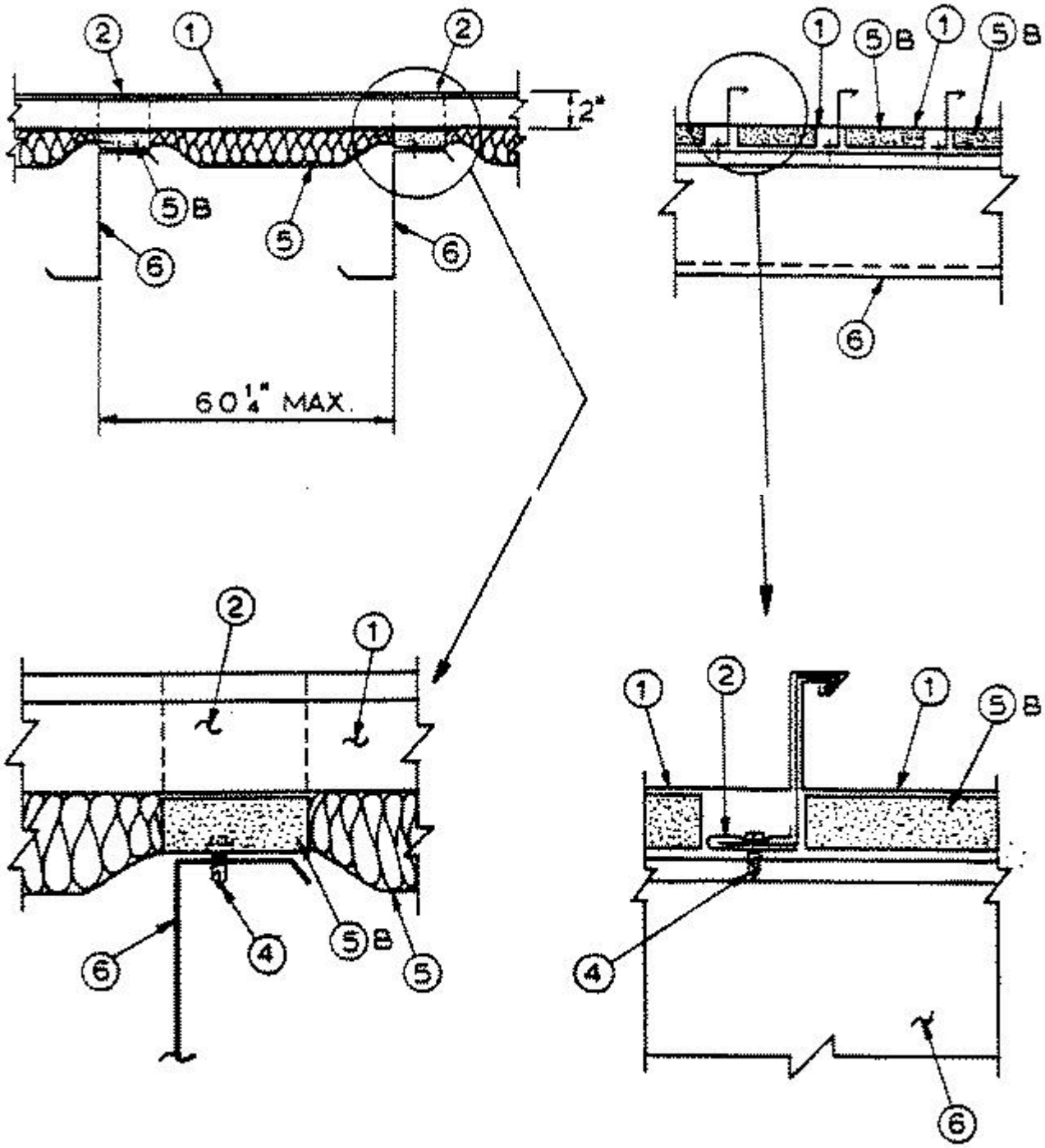
2
1
2
2"
5B
5
6
6
60 1/4" MAX.
1
5B
1
5B
6
2
1
4
5B
5
6
1
2
1
5B
4
6

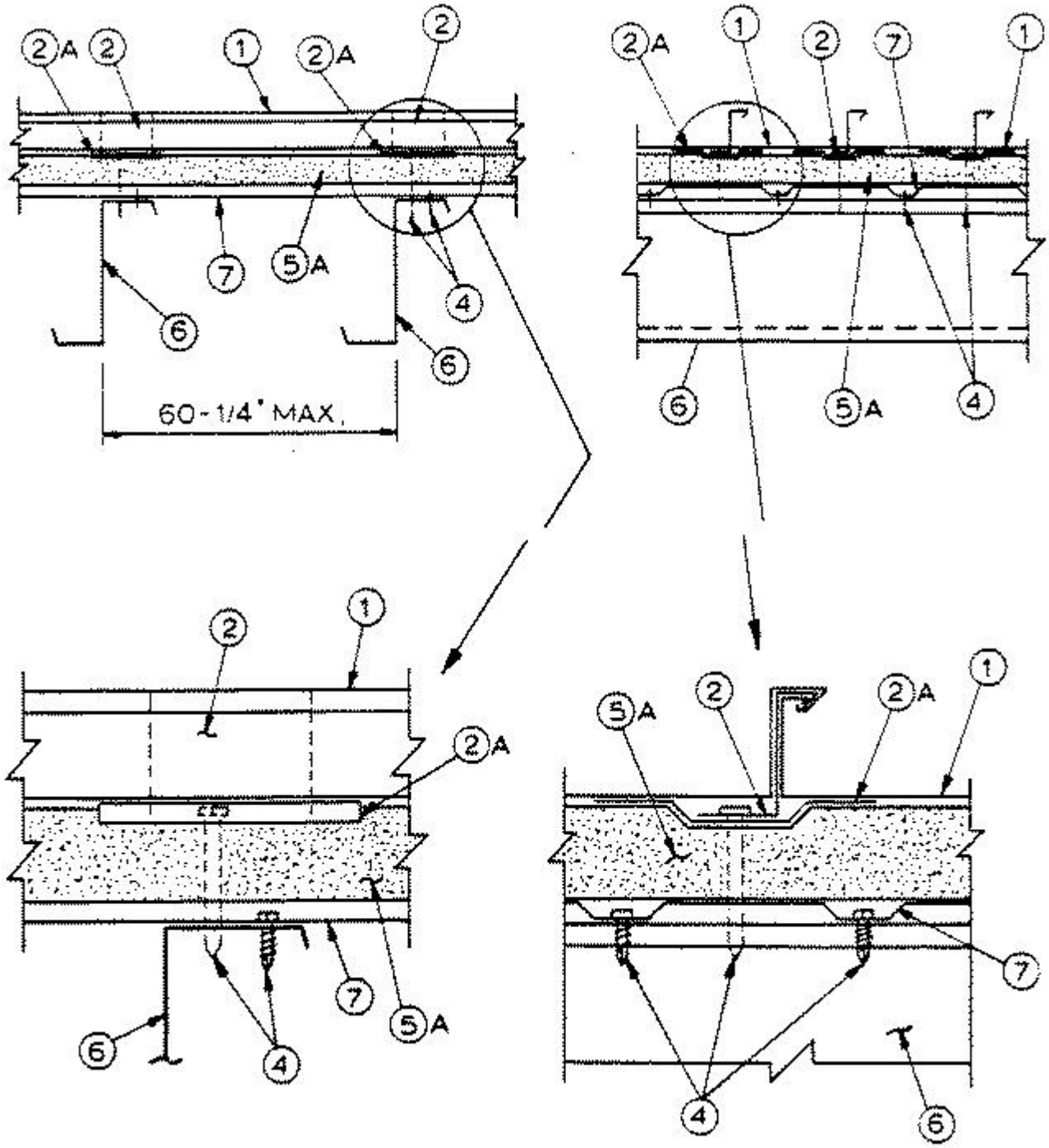

1. **Metal Roof Deck Panels —** No. 24 MSG minimum gauge steel. Panel continuous over two or more spans. Endlap to occur off the purlin and to include Endlap Backing Plate (Item 3). Panels shall be overlapped 6 in. Side laps to be tightened and crimped with a special motorized crimping machine. Crimping process to include tabs of Panel Clips (Item 2). A line of sealant may be used at panel endlaps and side joints.

AMERICAN BUILDINGS CO (View Classification) — "Loc Seam 90" or "Loc Seam 360"

CBC COMMERCIAL BUILDING COMPONENT INC (View Classification) — "Loc Seam 90" or "Loc Seam 360"

KIRBY BUILDING SYSTEMS INC (View Classification) — "Loc Seam 90" or "Loc Seam 360"

NUCOR CORP. (NUCOR BUILDINGS GROUP) (View Classification) — "Loc Seam 90" or "Loc Seam 360"

2. **Roof Deck Fasteners (Panel Clips) —** No. 24 MSG minimum gauge coated steel with a separately formed base fabricated of No. 18 MSG minimum gauge coated steel. One clip to be used per panel at each purlin.
AMERICAN BUILDINGS CO (View Classification) — "LSBC-1", "Loc-Seam Expansion Clip"

KIRBY BUILDING SYSTEMS INC (View Classification) — "LSBC-1" or "Roof Lok Clip"

SUPERIOR METAL SYSTEMS INC (View Classification) — SMS-24SSC

2A. **Panel Clip Bearing Plate —** Used with rigid insulation. Located under the Roof Deck Fasteners (Item 2) over rigid insulation. Fabricated from 0.043 in. thick minimum coated steel.

3. **Endlap Backing Plate —** 0.051 in. thick coated steel. Endlap plate to be 12-1/2 in. long and approximately the full panel width.

4. **Fasteners (Screws) —** For attaching panel clip to purlin when using compressible blanket insulation, up to 6 in. thickness over purlin, to be No. 12-14 by 1-1/4 in. long self-drilling, self-tapping, shoulder or stand-off type, hex-head screw or 1/4-14 x 1 1/4" minimum Self-Drilling, Self-Tapping Plated Steel Screw. One screw per clip to be used. Fasteners used to attach panel clips to the purlins when using rigid insulation (Item 5A) to be No. 12-14 self-drilling, self-tapping, hex-head screw or No. 14-14 Type AB self-drilling, self-tapping, hex-head screw. Length to vary with thickness of rigid insulation. Fastener length to be 3/4 in. longer than nominal thickness of rigid insulation. One screw per clip to be used.
Fasteners used to attach panel clips to purlin when using liner panel (Item 7) to be No. 12-14 self-drilling, self-tapping, hex-head screw, No. 14-14 Type AB self-drilling, self-tapping hex-head screw, or 1/4-14 x 1 1/4" minimum Self-Drilling, Self-Tapping Plated Steel Screw. Side lap fastener 1/4-14 x 7/8" minimum SDST. Minimum length to be equal to combined thickness of liner panel depth and foamed plastic thickness plus 3/4 inches. One screw per clip to be used.

Fasteners used to attach liner panel to purlin to be No. 12-14 by 1 in. long self-drilling, self-tapping, hex-head plated steel screws. Spacing to be 12 in. on center. Fasteners used at liner panel side laps to be No. 14 by 3/4 in. long, Type A or AB plated steel screw. Spacing to be 24 in. on center.

Fasteners used at panel endlaps to be No. 12-14 by 1-1/4 in. long self-drilling, self-tapping hex-head screws with 1/2 in. O.D. metal backed sealing washer, 1/4-14 x 1 1/4" minimum Self-Drilling, Self-Tapping Plated Steel Screw with a EPDM Sealing Washer, or 17-14 x 1 1/4" minimum Type AB SDST with EPDM Sealing Washer. Spacing to be 1, 3-1/4, 3-1/8, 3-3/4, 2-3/4, 1-7/8 in. pattern.

5. **Insulation (Optional) —** Any compressible blanket insulation 6 in. maximum thickness before compression.

5A. **Foamed Plastic (Rigid Insulation) —** Maximum thickness 4 in. supplied in 4 ft. widths.
THE DOW CHEMICAL CO (View Classification) — Type TF600 of TF610.

5B. **Space Block (Optional) —** Used with compressible insulation (Item 5) only 3 in. by 14-1/4 in. polystyrene foam. Thickness shall be 1 in, 1-1/2 in. or 2 inches. Panel clip (Item 2) shall be sized to accommodate each spacer block thickness.

6. **Purlin —** No. 16 or 18 MSG minimum gauge steel (50,000 psi minimum yield strength) or Type H or J open web joints. When 18 MSG minimum guage steel is utilized, a minimum of two fasteners (screws) are to be used (see Item 4 above).

7. **Liner panel (Optional) —** No. 29 MSG minimum thickness coated steel, depth 3/4 in., pitch 6 in., width 36 in., sided overlapped one corrugation. Enlap width minimum 2 in., located over purlins.
Refer To General Information, Roof Deck Constructions, (On-Line Certification Directory) for Items not evaluated.

*** Indicates such products shall bear the UL or cUL Certification Mark for jurisdictions employing the UL or cUL Certification (such as Canada), respectively.**

Last Updated on 2023-12-04

The appearance of a company's name or product in this database does not in itself assure that products so identified have been manufactured under UL Solutions' Follow - Up Service. Only those products bearing the UL Mark should be considered to be Certified and covered under UL Solutions' Follow - Up Service. Always look for the Mark on the product.

UL Solutions permits the reproduction of the material contained in Product iQ subject to the following conditions: 1. The Guide Information, Assemblies, Constructions, Designs, Systems, and/or Certifications (files) must be presented in their entirety and in a non-misleading manner, without any manipulation of the data (or drawings). 2. The statement "Reprinted from Product iQ with permission from UL Solutions" must appear adjacent to the extracted material. In addition, the reprinted material must include a copyright notice in the following format: "©2023 UL LLC."