ENGINEERING EXPRESS®

ENGINEERINGEXPRESS.COM | (954) 354-0660
POSTAL ADDRESS:
2234 NORTH FEDERAL HWY #7664
BOCA RATON, FL 33431

Performance Evaluation

Florida Statewide Product Approval (FSA) # FL 37637.1
Engineering Express Project # 23-62388
THIS DOCUMENT CONTAINS (9) PAGES.

EVALUATION SUBJECT: **LENNOX PACKAGED UNITS** FL # 37637.1

REPORT HOLDER:
LENNOX INDUSTRIES
2100 LAKE PARK BLVD
RICHARDSON, TX 75080, USA
1-866-953-6609 | WWW.LENNOX.COM

SCOPE OF EVALUATION (compliance with the following codes):

THIS IS A STRUCTURAL (WIND) PERFORMANCE EVALUATION ONLY. NO ELECTRICAL OR TEMPERATURE PERFORMANCE RATINGS OR CERTIFICATIONS ARE OFFERED OR IMPLIED HEREIN.
UNDER NO CIRCUMSTANCE DOES THIS PERFORMANCE EVALUATION GUARANTEE, IMPLY, OR STATE PERFORMANCE OF THE UNIT IS MAINTAINED DURING OR AFTER A DESIGN EVENT.

This Performance Evaluation is being issued in accordance with the requirements of the **Florida Building Code Eighth Edition (2023)** per ASCE 7, FBC Building Ch. 16, FBC Building Sections 104.11 & 1522.2, FBC Existing Building Sections 707.1 & 707.2, FBC Mechanical 301.15, FBC Residential M1202.1 & M1301.1, and FS 471.025. The product noted in this performance evaluation has been tested and/or evaluated as summarized herein.

SUBSTANTIATING DATA:
• Product Evaluation Documents
Substantiating documentation has been submitted to provide this performance evaluation and is summarized in the sections below.
• Structural Engineering Calculations
Structural engineering calculations have been prepared which evaluate the product based on comparative and/or rational analysis to qualify the following design criteria:

- Max. allowable lateral & uplift wind pressures certified herein
- Max. allowable sliding forces, uplift forces, & overturning moments (see Unit Reactions from Wind Guide on last page)
- Tie-down configuration and anchor capacity for concrete, aluminum, and steel host substrates (host by others).
- Unit panel wind pressure connection integrity

Calculation summary is included in this product evaluation and appears herein.

LIMITATIONS & CONDITIONS OF USE:
Use of the product(s) listed herein shall be in strict accordance with this product evaluation as noted herein and manufacturer-provided model specifications. Installation shall conform to the minimum standards stated in the referenced building code(s) in addition to the specifications and limitations stated herein. See herein for complete limitations & conditions of use.

OPTIONS:
This evaluation is valid for the models described herein. The critical unit designs have been determined and used in this evaluation. See herein for Tool-less Panel Filter Access option. Any structural changes outside of the design as described herein would void this certification.

UNIT CASING MATERIALS:
Base Rails: .069" min. thick, Fy = 30 ksi galv. steel
Base Pan: .047" min. thick, Fy = 22 ksi galv. steel
Cabinet Panels: .034" min. thick, Fy = 30 ksi galv. steel
Unit casing components are fastened together with #10, 2100 lb min. tensile strength (ultimate) and 1400 lb min. shear strength (ultimate) SMS. Contact Report Holder for further unit construction information.

TERMINOLOGY:
See herein for definitions of terms and abbreviations used in this evaluation.

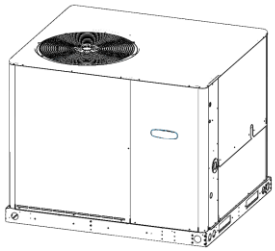

NOTE: THE GRAPHICAL DEPICTIONS IN THIS EVALUATION ARE FOR ILLUSTRATIVE PURPOSES ONLY AND MAY DIFFER IN APPEARANCE.

STRUCTURAL PERFORMANCE:
Models referenced herein are subject to the following design limitations:

Maximum Rated Wind Pressures*:
± 148 psf Lateral, 117 psf Uplift

- Required design wind pressures shall be determined according to the guide provided in the Appendix (see last page of this document) or on a site-specific basis in accordance with ASCE 7 and applicable sections of the building code(s) being referenced in accordance with ASD methodology.
- Required design pressures shall be less than or equal to the maximum pressures listed herein.
- *Maximum Rated Wind Pressures indicate the maximum pressures that all units listed herein are approved for. Valid for at-grade and rooftop applications. See limitations herein.
- Valid for use inside and outside the High-Velocity Hurricane Zone (HVHZ).
- Site-specific wind analysis may produce alternate limitations provided maximum rated wind pressures stated herein are not exceeded.

VISIT ECALC.IO/LENNOX
FOR MORE INFORMATION AND DEVIATIONS TO THIS EVALUATION OR SCAN THE QR CODE TO THE RIGHT >

Engineer Signature & Seal:

FRANK L. BENNARDO ★ LICENSE ★ No 0046549 ★ STATE OF FLORIDA ★ PROFESSIONAL ENGINEER

Digitally signed by Frank Bennardo
Date: 2024.07.02 14:28:49 -04'00'

July 2, 2024

Frank Bennardo, P.E.
ENGINEERING EXPRESS®
FL PE #0046549 FLCA #9885

MODEL INFORMATION

Model Number	Unit Dimensions (in)		
	Width	Depth	Height
LRP13ACK24*	47.63	47.63	41.00
LRP13ACK30*	47.63	47.63	41.00
LRP13ACK36*	47.63	47.63	41.00
LRP13ACK42*	56.13	47.63	45.00
LRP13ACK48*	56.13	47.63	45.00
LRP13ACK60*	47.63	56.13	45.00
LRP13GEK24*	47.63	47.63	41.00
LRP13GEK24*	47.63	47.63	41.00
LRP13GEK30*	47.63	47.63	41.00
LRP13GEK30*	47.63	47.63	41.00
LRP13GEK36*	47.63	47.63	41.00
LRP13GEK36*	47.63	47.63	41.00
LRP13GEK36*	47.63	47.63	41.00
LRP13GEK42*	56.13	47.63	45.00
LRP13GEK42*	56.13	47.63	45.00
LRP13GEK48*	56.13	47.63	45.00
LRP13GEK48*	56.13	47.63	45.00
LRP13GEK60*	56.13	47.63	45.00
LRP13GEK60*	56.13	47.63	45.00
LRP13GXK24*	47.63	47.63	41.00
LRP13GXK30*	47.63	47.63	41.00
LRP13GXK36*	47.63	47.63	41.00
LRP13GXK42*	56.13	47.63	45.00
LRP13GXK48*	56.13	47.63	45.00
LRP13GXK60*	56.13	47.63	45.00
LRP13HPK24*	47.63	47.63	41.00
LRP13HPK30*	47.63	47.63	41.00
LRP13HPK36*	47.63	47.63	41.00
LRP13HPK42*	56.13	47.63	45.00
LRP13HPK48*	47.63	56.13	45.00
LRP13HPK60*	47.63	56.13	45.00
LRP14AC24*	47.63	47.63	41.00
LRP14AC30*	47.63	47.63	41.00
LRP14AC36*	47.63	47.63	41.00
LRP14AC36*	56.13	47.63	45.00
LRP14AC42*	56.13	47.63	45.00
LRP14AC48*	56.13	47.63	45.00
LRP14AC60*	56.13	47.63	45.00
LRP14GE24*	47.63	47.63	41.00
LRP14GE30*	47.63	47.63	41.00
LRP14GE36*	47.63	47.63	41.00
LRP14GE42*	56.13	47.63	45.00

Model Number	Unit Dimensions (in)		
	Width	Depth	Height
LRP14GE48*	56.13	47.63	45.00
LRP14GE60*	56.13	47.63	45.00
LRP14GX24*	47.63	47.63	41.00
LRP14GX30*	47.63	47.63	41.00
LRP14GX36*	47.63	47.63	41.00
LRP14GX36*	56.13	47.63	45.00
LRP14GX42*	56.13	47.63	45.00
LRP14GX48*	56.13	47.63	45.00
LRP14GX60*	56.13	47.63	45.00
LRP14HP24*	47.63	47.63	41.00
LRP14HP30*	47.63	47.63	41.00
LRP14HP36*	47.63	47.63	41.00
LRP14HP36*	56.13	47.63	45.00
LRP14HP42*	56.13	47.63	45.00
LRP14HP48*	56.13	47.63	45.00
LRP14HP60*	56.13	47.63	45.00
LRP15GEK24*	47.63	47.63	41.00
LRP15GEK36*	47.63	47.63	41.00
LRP15GEK36*	47.63	47.63	41.00
LRP15GEK48*	56.13	47.63	45.00
LRP15GEK60*	56.13	47.63	45.00
LRP15GXK24*	56.13	47.63	45.00
LRP15GXK36*	47.63	47.63	41.00
LRP15GXK36*	47.63	47.63	41.00
LRP15GXK48*	56.13	47.63	45.00
LRP15GXK60*	56.13	47.63	45.00
LRP15HPK24*	47.63	47.63	41.00
LRP15HPK36*	47.63	47.63	41.00
LRP15HPK48*	56.13	47.63	45.00
LRP15HPK60*	47.63	56.13	45.00
LRP16GE24*	47.63	47.63	41.00
LRP16GE36*	47.63	47.63	41.00
LRP16GE48*	56.13	47.63	45.00
LRP16GE60*	56.13	47.63	45.00
LRP16GX24*	47.63	47.63	41.00
LRP16GX36*	47.63	47.63	41.00
LRP16GX48*	56.13	47.63	45.00
LRP16GX60*	56.13	47.63	45.00
LRP16HP24*	47.63	47.63	41.00
LRP16HP36*	47.63	47.63	41.00
LRP16HP48*	56.13	47.63	45.00
LRP16HP60*	56.13	47.63	45.00

MODEL INFORMATION NOTES

All unit net weight shall be between 280lb and 600 lb. Model numbers, dimensions and weights listed herein are based on information provided by the client. Please contact Report Holder and/or Manufacturer for more information. Unit height includes base rail height. Model number characters following the asterisk (*) do not pertain to this structural certification and may be any combination of numbers or characters.

VISIT ECALC.IO/62388

FOR A LIST OF APPROVED MODEL NUMBERS STATED IN FULL (NO ASTERISKS) OR SCAN THE QR CODE TO THE RIGHT >

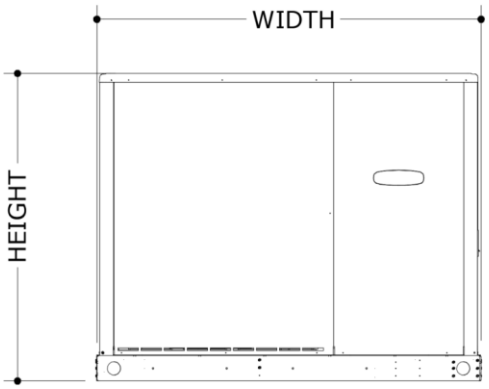

1 **FRONT VIEW**
SCALE: NTS

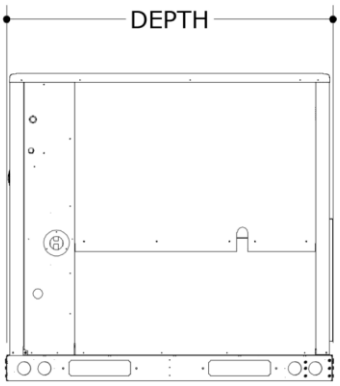

2 **SIDE VIEW - RIGHT**
SCALE: NTS

Note: Unit depictions in Details 1 and 2 above are for illustrative purposes only. Actual units may differ in appearance. Louvers on panels are not shown.

PRODUCT INSTALLATION

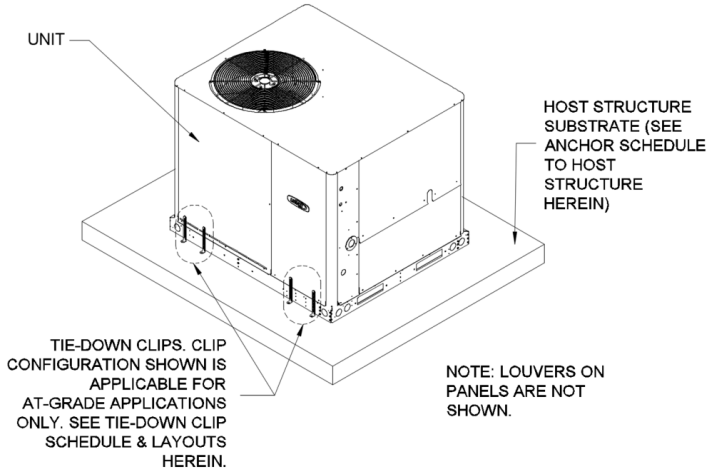

I MIAMI TECH TIE-DOWN CLIP

Miami Tech CUTD 1" wide and 8" tall ASTM A653 galvanized steel, 0.07" min. thick.

Fasten clip to host structure per the "Anchor Schedule to Host Structure" table and notes.

Fasten clip to unit base rail per the "Tie-Down Clip Schedule" table and notes.

Miami Tech Kit #'s:
AAECUTD8KG - At-Grade Steel / Slab Mounts
AAECUTD8KR - Rooftop Steel Rail Mount

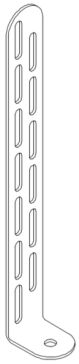

TIE-DOWN CLIP SCHEDULE: Note: Wind pressures listed are allowable (ASD) wind pressures.

WIND PRESSURE LATERAL (UPLIFT)	# OF TIE-DOWN CLIPS REQUIRED
± 66 psf (53 psf)	8
± 90 psf (72 psf)	12
± 120 psf (95 psf)	12
± 148 psf (117 psf)	12

TIE-DOWN CLIP SCHEDULE NOTES:
Tie-down clips shall be equally distributed between each unit long side (i.e. along unit width). Provide 6" min. spacing between tie-down clips. Provide 4" min. edge distance from unit short sides. Each tie-down clip shall sit flush on host structure and flush against unit base rail. Fasten tie-down clip to base rail with (4) #10 SS316 self-drilling screws with 0.395" Ø washers, typ. Utilize the (4) bottom-most slots on each tie-down clip, (1) screw per slot, typ. (See Detail 3). Ensure all screws fully engage with solid sections of the unit base rail (do not position tie-down clips where holes/slots in the base rail interfere with screw connections). Fasten each tie-down clip to host structure using (1) anchor per the "Anchor Schedule to Host Structure" table herein.

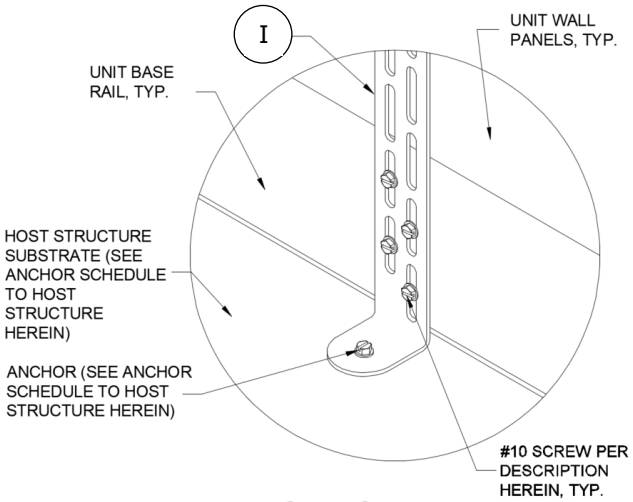

3 **TIE-DOWN CLIP ATTACHMENT TO UNIT, TYP.**
SCALE: NTS ISOMETRIC VIEW

PRODUCT INSTALLATION CONTINUED

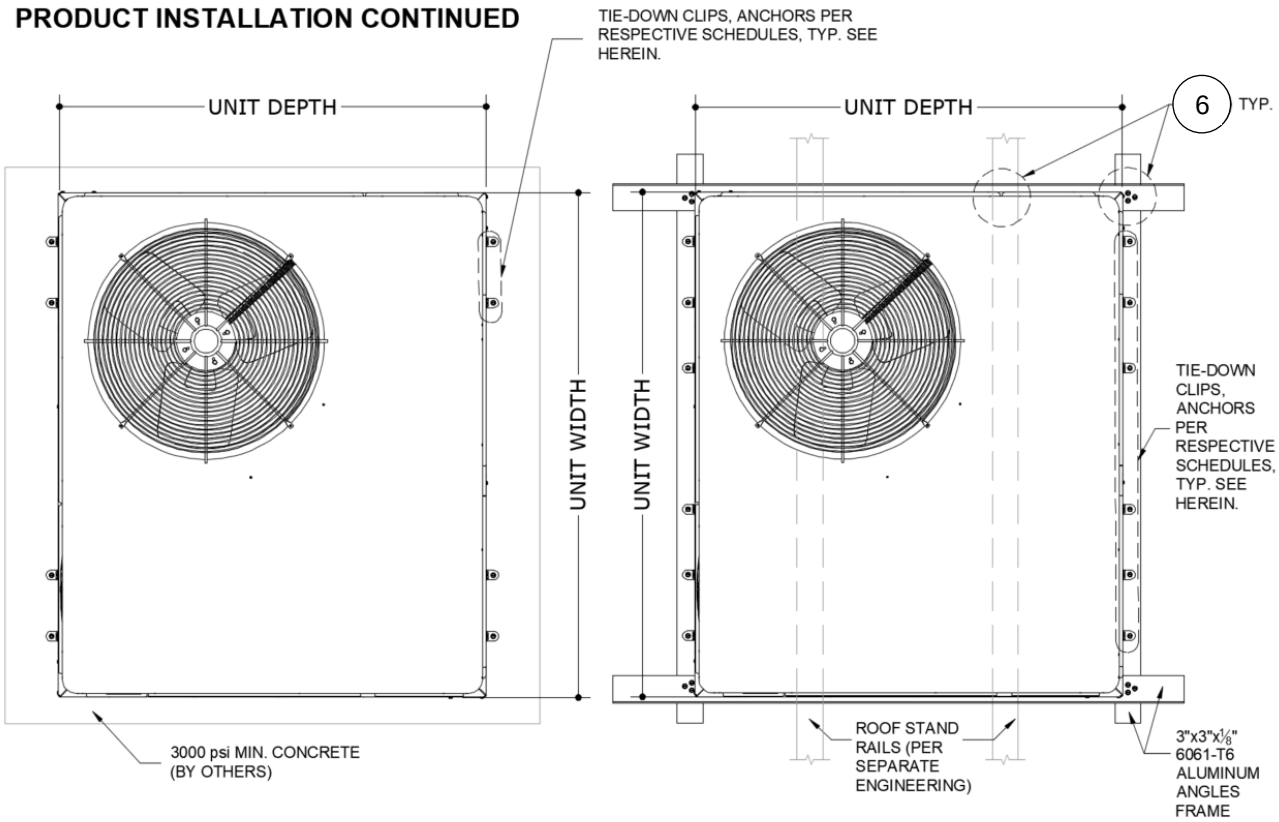

4 **ANCHOR LAYOUT AT-GRADE**
SCALE: NTS PLAN VIEW

5 **ANCHOR LAYOUT AT ROOF**
SCALE: NTS PLAN VIEW

Miami Tech Kit #'s:
AAECUTD8KG - At-Grade Steel / Slab Mounts
AAECUTD8KR - Rooftop Steel Rail Mount

NOTE: SEE NEXT PAGE FOR MORE INFORMATION ABOUT ROOFTOP INSTALLATIONS.

ANCHOR SCHEDULE TO HOST STRUCTURE

Wind Pressure Lateral (Uplift)	3000 psi min. Concrete	1/8" min. thick Fy = 36 ksi min. Steel	1/8" min. thick 6061-T6 Aluminum	1/8" min. thick Fy = 36 ksi min. Steel Curb	18 GA (.051") min. thick Fy = 36 ksi min. Steel Curb
± 66 psf (53 psf)	A	B	B	C	D
± 90 psf (72 psf)	N/A	B	B	C	E
± 120 psf (95 psf)	N/A	B	B	C	E
± 148 psf (117 psf)	N/A	B	B	C	E

ANCHOR SCHEDULE TO HOST STRUCTURE NOTES:

Note: Wind pressures listed are allowable (ASD) wind pressures.

All host structures described in the anchor schedule are by others.
Anchors shall be selected per site-specific wind pressures and host structure. Wind pressures up to ± 66 psf lateral (53 psf uplift) and below shall use the anchor specified in the ± 66 psf lateral (53 psf uplift) tier. Site-specific wind pressures that fall in-between pressure tiers shall use the anchor specified by the higher pressure tier.

Anchor Schedule to Host Structure Key:

A: 1/4" Ø DeWalt UltraCon+ or equivalent with 1" min. OD washer, 1.75" embedment, and 3" min. edge distance from any edge of concrete, typ.

B: 1/4" Ø SAE Gr. 5 or SS Thru-Bolt with 5/8" min. OD washers top and bottom, typ. Provide 1/2" min. edge distance between Thru-Bolt and any edge of substrate, typ.

C: 3/8" Ø SAE Gr. 5 SMS at 10" O.C. max. and 5" max. from ends, all sides. Ensure the threaded portion engages steel curb material beyond the curb flange (see Detail 8). Ensure (5) pitches min. past the thread plane, typ.

D: 3/8" Ø SAE Gr. 5 SMS at 8" O.C. max. and 5" max. from ends, all sides. Ensure the threaded portion engages steel curb material beyond the curb flange (see Detail 8). Ensure (5) pitches min. past the thread plane, typ.

E: 3/8" Ø SAE Gr. 5 SMS at 6" O.C. max. and 5" max. from ends, all sides. Ensure the threaded portion engages steel curb material beyond the curb flange (see Detail 8). Ensure (5) pitches min. past the thread plane, typ.

ROOFTOP INSTALLATION DETAILS

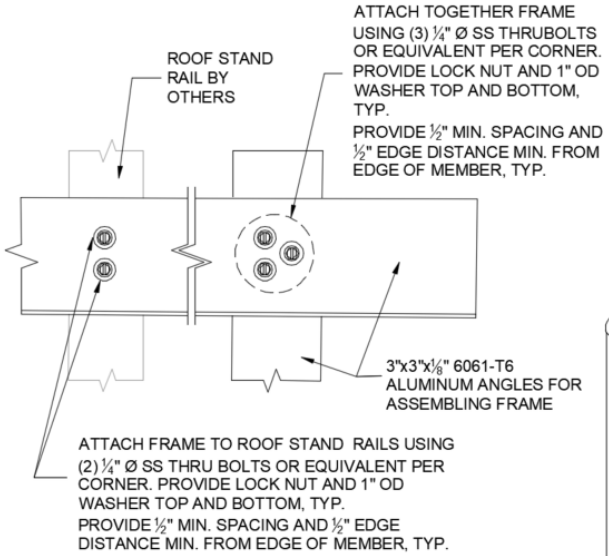

ROOF FRAME TYPICAL CONNECTIONS

6 SCALE: NTS PLAN VIEW

***NOTE: FOR CONDITIONS WITH STAND DEPTH GREATER THAN UNIT DEPTH, MIAMI TECH SUPPORT ANGLES PER NOA #17-1218.02 SHALL BE PROVIDED OR SITE-SPECIFIC ENGINEERING IS REQUIRED. SUPPORT ANGLES ARE INCLUDED IN MIAMI TECH KIT # AAECUTD8KR.**

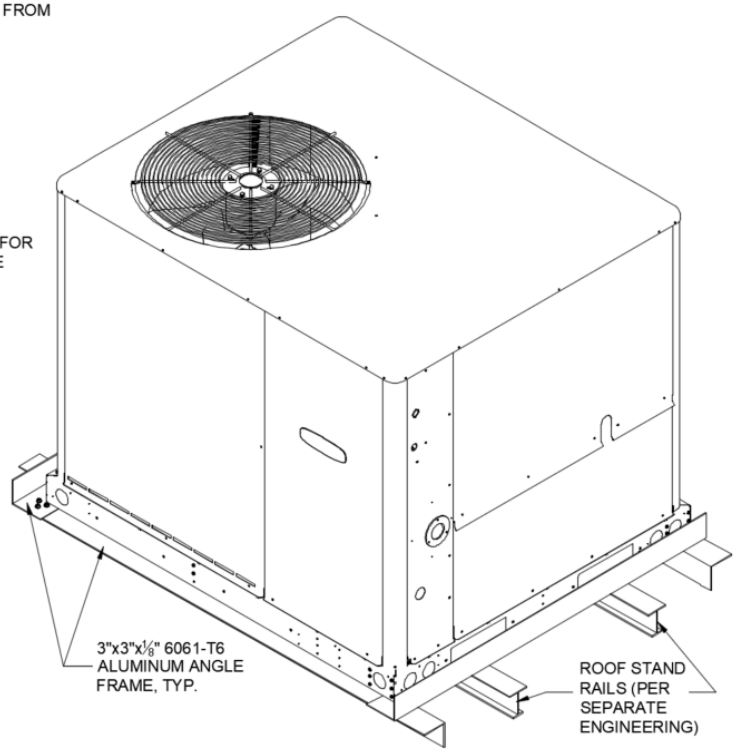

NOTE: FOR DETAIL 7 TIE-DOWN CLIPS AND LOUVERS ON PANELS ARE NOT SHOWN. SEE "ANCHOR LAYOUT AT ROOF" DETAIL HEREIN.

UNIT MOUNT ON ROOF STAND AND FRAME

7 SCALE: NTS ISOMETRIC VIEW

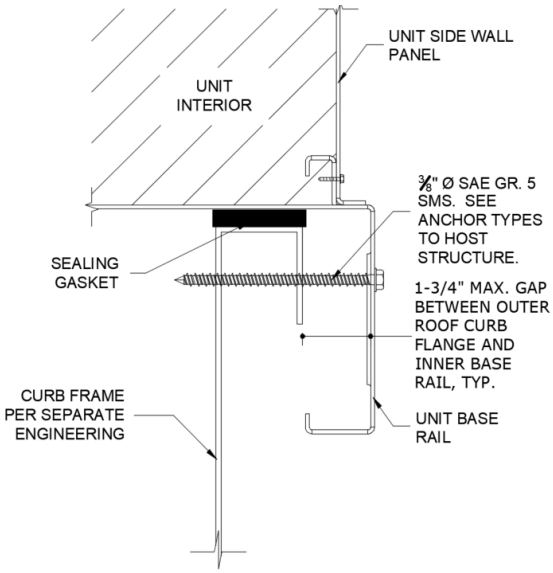

UNIT ATTACHMENT TO ROOFTOP CURB

8 SCALE: NTS SECTION VIEW

NOTE: WOOD NAILER (IF APPLICABLE) NOT SHOWN IN ABOVE DETAIL.

NOTE: SEE ANCHOR SCHEDULE FOR CURB THICKNESS OPTIONS

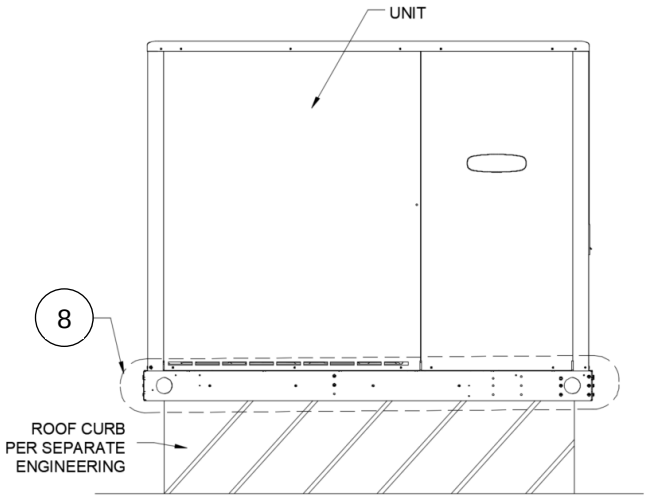

UNIT MOUNT TO ROOFTOP CURB

9 SCALE: NTS SECTION VIEW

PANEL DESIGNATIONS

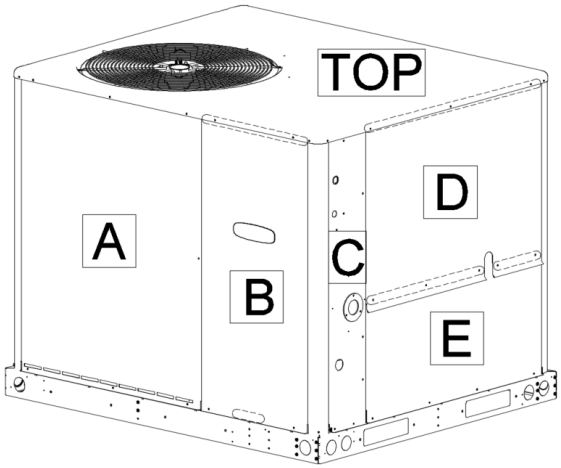

10 **FRONT ISOMETRIC VIEW**
SCALE: NTS

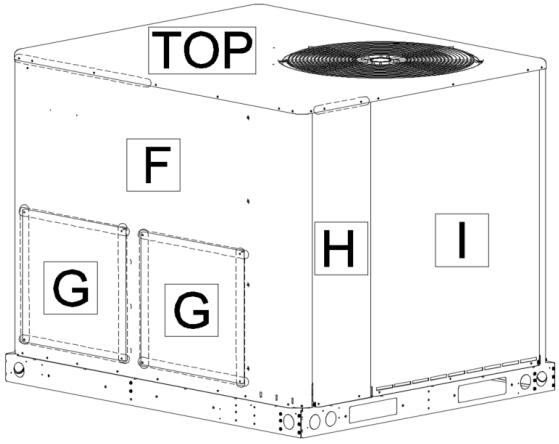

11 **BACK ISOMETRIC VIEW**
SCALE: NTS

Note: Unit depictions in Details 10 and 11 above are for illustrative purposes only. Actual units may differ in appearance. Louvers on Panel A and Panel I are not shown. Circled regions on panel illustrate additional screw locations per the Additional Screws Directives below.

PANEL INTEGRITY SUMMARY

Up to ± 66 psf Lateral & 53 psf Uplift Wind Pressures		
Panel Designation	**Additional Screws Required**	**Additional Screws Directive**
Top Panel	0*	*No additional screws required beyond the additional screws specified herein for joining individual wall panels to the Top Panel. See other panel directives.
Panel A	0	No additional screws required for Panel A.
Panel B	0	No additional screws required for Panel B.
Panel C	0	No additional screws required for Panel C.
Panel D	2	Install (2) screws at bottom of panel to join with Panel E.
Panel E	0*	*No additional screws required beyond the (2) screws at top of Panel E as specified in the Panel D directive.
Panel F	0	No additional screws required for Panel F.
Panel G	0	No additional screws required for Panel G.
Panel H	0	No additional screws required for Panel H.
Panel I	0	No additional screws required for Panel I.
(2) Additional Screws Required in Total		

Up to ± 148 psf Lateral & 117 psf Uplift Wind Pressures		
Panel Designation	**Additional Screws Required**	**Additional Screws Directive**
Top Panel	0*	*No additional screws required beyond the additional screws specified herein for joining individual wall panels to the Top Panel. See other panel directives.
Panel A	0	No additional screws required for Panel C.
Panel B	4	Install (1) screw into base rail at bottom of panel on-center between existing screws. Install (3) screws at top to join with Top Panel.
Panel C	0	No additional screws required for Panel C.
Panel D	12	Install (3) screws at top to join with Top Panel Install (9) screws at bottom of panel to join with Panel E.
Panel E	0*	*No additional screws required beyond the (9) screws at top of Panel E as specified in the Panel D directive.
Panel F	4	Install (4) screws at top-left half of panel to join with Top Panel.
Panel G	4	Install (4) screws along outer edges of the panel to join with Panel F.
Panel H	1	Install (1) screws at top to join with Top Panel.
Panel I	0	No additional screws required for Panel I.
(25) Additional Screws Required in Total		

Panel Integrity Summary Notes: Note: Wind pressures listed are allowable (ASD) wind pressures.

<u>No additional screws are required for allowable (ASD) wind pressures up to ± 54 psf lateral & 43 psf uplift.</u>
Calculations were performed according to the information provided by the client for a worst-case unit (which was determined by this office to be a 47.63" W x 56.13" D x 45" H unit). Panels were assigned various porosities depending on the ratio of louver area to total panel area, for tension and shear calculation purposes. Screw quantities were checked to reinforce unit panels as needed. Additional screws shall be #10 min. Ø 2100 lb min. tensile strength (ultimate) and 1400 lb min. shear strength (ultimate) SMS. They shall be positioned according to the "Additional Screws Directives" in the tables above and Details 10 and 11. Provide 1" min. spacing between neighboring screws (existing or additional). Distribute additional screws evenly between left and right sides of the panel U.N.O.

Validate that each additional screw joins the panel to the 0.034" min. thick steel member. Screw sizes, quantities on panels, and panel characteristics are according to the client's description. 1000 hours of ASTM B117 are required with zero red rust for all additional screws.

TOOL-LESS PANEL FILTER ACCESS OPTION - PANEL INTEGRITY SUMMARY

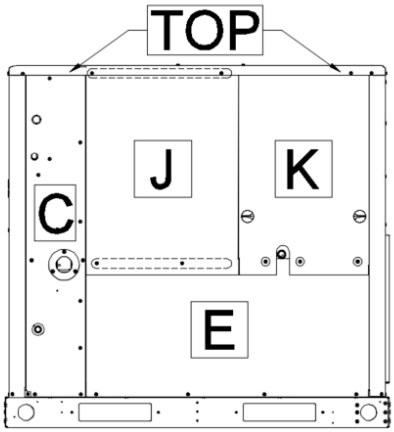

12 **SIDE VIEW - RIGHT**
SCALE: NTS

Note: Unit depiction in Detail 12 is for illustrative purposes only. Actual units may vary slightly in appearance. Circled regions on panels illustrate additional screw locations per the "Additional Screw Directives" shown right and on the previous page.

Up to ± 66 psf Lateral & 53 psf Uplift Wind Pressures		
Panel Designation	**Additional Screws Required**	**Additional Screws Directive**
Panel J	1	Install (1) screw at bottom of panel to join with Panel E.
Panel K	0	No additional screws required for Panel K.
Panel E	0*	*No additional screws required beyond the (1) screw at top of Panel E as specified in the Panel J directive.
(1) Additional Screw Required in Total (See Previous Page)		

Up to ± 148 psf Lateral & 117 psf Uplift Wind Pressures		
Panel Designation	**Additional Screws Required**	**Additional Screws Directive**
Panel J	8	Install (3) screws at top to join with Top Panel. Install (5) screws at bottom of panel to join with Panel E.
Panel K	0	No additional screws required for Panel K.
Panel E	0*	*No additional screws required beyond the (5) screws at top of Panel E as specified in the Panel J directive.
(21) Additional Screws Required in Total (See Previous Page)		

Tool-less Panel Filter Access Option - Note: Wind pressures listed are allowable (ASD) wind pressures.

This option may be implemented in lieu of Panel as shown on the previous page. The additional screws required and directives for Panels J and K replace those required for Panel D on the previous page. Similarly, the additional screws required and directive for Panel E on this page replaces those required for Panel E on the previous page. Updated additional screws required totals are listed above. For Panel K, the (2) SOUTHCO zinc alloy latches, part # E5-2-125-051, were rated according to the stated maximum working load of 74.1 lb (330 N) each, per the information provided by the client. **For this option, no additional screws are required for allowable (ASD) wind pressures up to ± 43 psf lateral & 34 psf uplift.** All "Panel Integrity Summary Notes" stated prior apply for this option U.N.O.

REMAINDER OF PAGE INTENTIONALLY LEFT BLANK

TERMINOLOGY, CONTINUED

The following abbreviations may appear in this report: "Addtl." for "additional", "AHJ" for "Authority Having Jurisdiction", "alum" for "aluminum", "ASCE" for "American Society of Civil Engineers", "ASD" for "Allowable Stress Design", "ASTM" for "American Society for Testing and Materials", "EA." for "each", "E.D." for edge distance", "EDDS" for "extra deep drawing steel", "e.g." for "*exempli gratia*" or "for example", "equiv." for "equivalent", "FBC" for "Florida Building Code", "FEA" for "Finite Element Analysis", "FLCA" for "Florida Certificate of Authorization", "FS" for "Florida Statutes", "Fu" for "ultimate tensile strength" or "ultimate tensile stress", "Fy" for "yield strength" or "yield stress" "GA" for "gauge", "GR." or "Gr." for "grade", "HVAC" for "heating, ventilation, and air conditioning", "HVHZ" for "High-Velocity Hurricane Zone", "i.e. " for "*id est*" or "in other words", "in" for "inch", "lb" for "pound (force)", "max." for "maximum", "min." for "minimum", "mm" for "millimeter", "NTS" for "not to scale", "O.C. " for "on center", "OD" for "outer diameter", "pcf" for "pounds (force) per cubic foot", "PE" for "Professional Engineer", "qty" for "quantity", "SAE" for "Society of Automotive Engineering", "SMS" for "sheet metal screws", "SS" for "stainless steel", "TER" for "Technical Evaluation Report", "typ." for "typical", "ult" for "ultimate loads", "U.N.O." for "unless noted otherwise", "UTS" for "ultimate tensile strength" or "ultimate tensile stress", "WLL" for "working load limit", "w/o" for "without", "YS" for "yield strength" or "yield stress", "#" for "number", "&" for "and", and "Ø" for "diameter". Please visit ecalc.io/glossary for additional abbreviation clarifications.

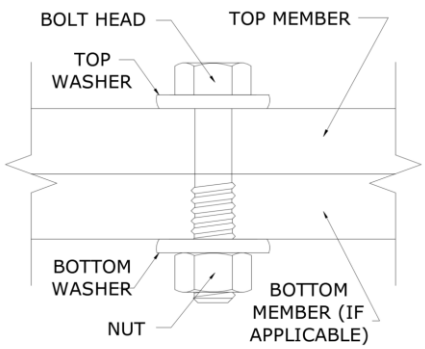

SAMPLE THRU-BOLT
SCALE: NTS SECTION VIEW

Note: The term "Thru-Bolt" or through bolt, if used herein, refers to a bolt passing through the member(s) in contact and is fastened by a nut at the end opposite the screw head. Nut shall be equivalent to or exceed the strength of the bolt U.N.O. Nut shall be sized to accommodate the same nominal diameter as the bolt U.N.O. See diagram above-right for a sample thru-bolt configuration.

Note: For instances herein which list material specifications as *"[material type] or stronger":*
U.N.O. herein, the term "stronger" refers to a material with a UTS value equal to or greater than the UTS value of the stated material type. Consult appropriate literature for established material UTS values.

Note: Equivalent steel gauge thicknesses as used in this evaluation, U.N.O., are as follows:
22 GA (.030"), 20 GA (.036"), 18 GA (.048"), 16 GA (.060"), 14 GA (.075"), 12 GA (.098").

LIMITATIONS & CONDITIONS OF USE, CONTINUED

Use of this product shall be in strict accordance with this product evaluation as noted herein. The supporting host structure shall be designed to resist all superimposed loads as determined by others on a site-specific basis as may be required by the authority having jurisdiction. Host structure conditions which are not accounted for in this product's respective anchor schedule shall be designed for on a site-specific basis by a registered Professional Engineer. No evaluation is offered for the host supporting structure by use of this document. Adjustment factors noted herein and the applicable building codes must be considered, where applicable. Product components shall be of the material(s) specified in the manufacturer-provided product specifications. All supporting components which are permanently installed shall be protected against corrosion, contamination, and other such damage at all times. All fasteners and anchors shall be installed in accordance with the applicable provisions specified herein in addition to the anchor/fastener manufacturers' published installation instructions. Fasteners must penetrate the supporting members such that the full length of the threaded portion is embedded within the main member. This evaluation does not offer any evaluation to meet large missile impact debris requirements under any circumstances.

All of the wind-resisting exterior panels (with accompanying retrofits) individually meet or exceed their capacity to resist the design wind loads as stated in the calculations as required by the codes and standards stated herein. Due to the indeterminate nature of these units, distortion, deflection, and material deformation cannot be accurately evaluated, but with the diaphragm action of external components and internal stiffeners, the base unit (with accompanying retrofits stated herein as applicable) has the capacity to withstand the design wind loads without detaching from the unit and becoming flying debris.

Survivability: This performance evaluation is valid for a newly installed unit and do not include certification of the product beyond a design event or if impacted by any debris. Inspections shall be implemented annually by the end user and after every named storm. All fasteners and cabinet components are to be verified, and all damaged, loose, corroded and/or broken fasteners and cabinet components shall be replaced to ensure structural integrity against hurricane wind forces. Contact this office for any reevaluation needs or as designated by the Authority Having Jurisdiction.

Durability: Components or component assemblies shall not deteriorate, crack, fail, or lose functionality due to galvanic corrosion or weathering. All supporting components which are permanently installed shall be protected against corrosion, contamination, and other such damage at all times. Each component or component assembly shall be supported and oriented in its intended installation position. All exposed plastic components shall be certified to resist sunlight exposure as specified by ASTM B117, or ASTM G155 in Broward or Miami Dade counties.

Extent of Certification: Certification pertains to the overall structural integrity of the unit components listed within the evaluation as required by code, subject to the limitations and criteria stated herein. Operability during or after a design event is not included in this certification. Water infiltration is outside the bounds of this certification. No other certifications are intended other than as described herein. This evaluation alone does not offer any evaluation for large missile impact debris or cyclic wind requirements unless specifically stated herein.

Proj. #	Remarks	By	Checked	Date	Proj. #	Remarks	By	Checked	Date
20-30756	Prev. Submittal (R2)	EPR	EPR	10/25/22	23-62388	Add New Models	MARH	EPR	06/12/24
23-62388	2023 FBC Update	MR/ER	EPR	10/23/23					

APPENDIX A: DESIGN WIND PRESSURE GUIDE

Max. Ult. Wind Speed (V_{ult})	Max. MRH (Roof Height)	Exposure Category	Required Design Wind Pressures (ASD)	
			Lateral Pressure	Uplift Pressure
140 mph	At-Grade (0 ft)	C	± 26 psf	0* psf
		D	± 31 psf	0* psf
	100 ft	C	± 63 psf	50 psf
		D	± 71 psf	56 psf
	200 ft	C	± 72 psf	57 psf
		D	± 80 psf	63 psf
175 mph	At-Grade (0 ft)	C	± 40 psf	0* psf
		D	± 49 psf	0* psf
	100 ft	C	± 98 psf	77 psf
		D	± 111 psf	87 psf
	200 ft	C	± 113 psf	89 psf
		D	± 124 psf	98 psf
186 mph	At-Grade (0 ft)	C	± 46 psf	0* psf
		D	± 54 psf	0* psf
	100 ft	C	± 111 psf	87 psf
		D	± 125 psf	99 psf
	200 ft	C	± 127 psf	100 psf
		D	± 140 psf	111 psf

~~100 psf~~ Note: Any table values with the format shown left, if present, indicate design wind pressures and site conditions that are **not approved for use** by this evaluation. Seek additional engineering or contact this firm for design solutions.

DIRECTIVE: This design pressure guide is for reference only and shall be approved for use by the Authority Having Jurisdiction (AHJ). If the design pressures listed in this guide are not used, required design pressures shall be calculated separately. For site-specific scenarios classified as Exposure Category B, the required design pressures stated for Exposure Category C in the above guide shall be used or design pressures shall be calculated separately. For heights and parameters beyond the parameters listed in this guide, visit our Online Calculator via the website link (https://ecalc.io/forces) or QR Code below, or obtain calculations separately by others.

The required ASD design pressures listed in this guide were calculated per the table's listed corresponding site conditions. The project design professional or permitting contractor shall verify that the site-specific conditions are equal to or less than the approved design parameters listed in the guide. Per the note below table: any values shown as "~~XX psf~~", indicate wind pressures and corresponding site conditions that are **not valid for use** with this evaluation (exceeds the max. rated pressures).

*Note: Per the codes and standards referenced herein, uplift is not required for mechanical equipment at-grade. If uplift at-grade is required by the AHJ, contact this firm for a site-specific evaluation.

At-Grade (0 ft MRH) Required Design Pressures:

- ASCE 7 "Design Wind Loads: Other Structures"
- Structure Shape = Square, flat terrain
- Height of structure (unit + stand or curb, if used) = 6 ft max.
- Width of unit = 1 ft min., Depth of unit = 11 in min.

Rooftop (>15 ft MRH) Required Design Pressures:

- ASCE 7 "Design Wind Loads: Other Structures: Rooftop Structures and Equipment for Buildings"
- Structure Shape = Square, flat terrain
- z = up to 7 ft, where z = height of stand or curb + ½ unit height
- Lateral GC_f = 1.90; Uplift GC_f = 1.50

VISIT ECALC.IO/FORCES

FOR DESIGN AID CALCULATORS AND RESOURCES RELATED TO THIS EVALUATION & GUIDES HEREIN, OR SCAN THE QR CODE RIGHT >

UNIT REACTIONS FROM WIND GUIDE

DIRECTIVE: This guide is intended for use by a design professional. Design parameters shall abide all specifications and limitations stated in this evaluation. Design professional shall consider all forces, including seismic and snow loads, per the governing building code. Unit reactions obtained from this guide shall be verified by a registered Professional Engineer. Reactions are applicable for unit-to-host connections only. Sample calculations are provided below.

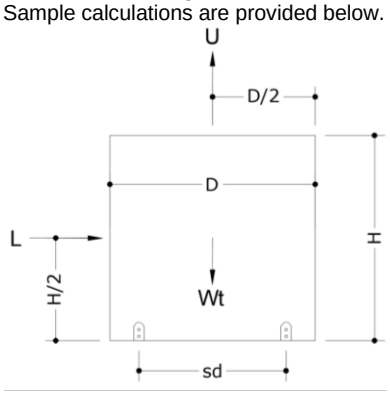

Design Parameters:

- Lateral Wind Pressure, P_lat
- Unit Height, H
- Unit Width, W
- Support Spacing across Depth, sd
- Uplift Wind Pressure, P_up
- Unit Depth, D
- Unit Weight, Wt
- Support Spacing across Width, sw

Unit Reaction Equations:

Long Side (Width x Height):

- Sliding Force, L = P_lat x W x H
- Uplift Force, U = P_up x W x D
- Total Tension per Long Side =

(L x H/2 + U x sd/2 – Wt x 0.6 x sd/2) / sd

Short Side (Depth x Height):

- Sliding Force, L = P_lat x D x H
- Uplift Force, U = P_up x W x D
- Total Tension per Short Side =

(L x H/2 + U x sw/2 – Wt x 0.6 x sw/2) / sw

Example: A (48" W x 36" D x 42" H), 250 lb net weight unit at wind pressures of 120 psf lateral and 95 psf uplift, on a 24" wide roof stand, shall have the following unit reactions:

Long Side (Width x Height):

1. Sliding Force, L = P_lat x W x H
   = (120 psf) x (48 in) x (42 in) x (1 in^2 / 144 ft^2) = **1680 lb**
2. Uplift Force, U = P_up x W x D
   = (95 psf) x (48 in) x (36 in) x (1 in^2 / 144 ft^2) **= 1140 lb**
3. Total Tension per Long Side =
   = (L x H/2 + U x sd/2 – Wt x 0.6 x sd/2) / sd
   = ((1680 lb x 42/2 in) + (1140 lb x 24/2 in) – (250 lb x 0.6 x 24/2 in)) / 24 in **= 1965 lb**

Short Side (Depth x Height):

1. Sliding Force, L = P_lat x D x H
   = (120 psf) x (36 in) x (42 in) x (1 in^2 / 144 ft^2) **= 1260 lb**
2. Uplift Force, U = P_up x W x D
   = (95 psf) x (48 in) x (36 in) x (1 in^2 / 144 ft^2) **= 1140 lb**
3. Total Tension per Short Side =
   = (L x H/2 + U x sw/2 – Wt x 0.6 x sw/2) / sw
   = ((1260 lb x 42/2 in) + (1140 lb x 48/2 in) – (250 lb x 0.6 x 48/2 in)) / 48 in **= 1046 lb**

IN ALL CONDITIONS IT IS THE RESPONSIBILITY OF THE PERMIT HOLDER TO ENSURE THE HOST STRUCTURE IS CAPABLE OF WITHSTANDING THE RATED GRAVITY, LATERAL, AND UPLIFT FORCES BY SITE-SPECIFIC DESIGN. NO WARRANTY OF ANY KIND, EXPRESSED OR IMPLIED, IS OFFERED BY ENGINEERING EXPRESS AS TO THE INTEGRITY OF THE HOST STRUCTURE TO CARRY DESIGN FORCE LOADS INCURRED BY THIS UNIT.