ENGINEERING EXPRESS®

ENGINEERINGEXPRESS.COM | (954) 354-0660
POSTAL ADDRESS:
2234 NORTH FEDERAL HWY #7664
BOCA RATON, FL 33431

Performance Evaluation

Florida Statewide Product Approval (FSA) # FL 37384.11
Engineering Express Project # 26-102800
THIS DOCUMENT CONTAINS (12) PAGES.

EVALUATION SUBJECT: **CONCORD SPLIT SYSTEMS** FL # 37384.11

REPORT HOLDER:
ALLIED AIR ENTERPRISES, LLC
215 METROPOLITAN DRIVE
WEST COLUMBIA, SC 29170, USA
1-800-448-5872 | ALLIEDAIR.COM

CONCORD®

NOTE: THE GRAPHICAL DEPICTIONS IN THIS EVALUATION ARE FOR ILLUSTRATIVE PURPOSES ONLY AND MAY DIFFER IN APPEARANCE.

SCOPE OF EVALUATION (compliance with the following codes):

THIS IS A STRUCTURAL (WIND) PERFORMANCE EVALUATION ONLY. NO ELECTRICAL OR TEMPERATURE PERFORMANCE RATINGS OR CERTIFICATIONS ARE OFFERED OR IMPLIED HEREIN.
UNDER NO CIRCUMSTANCE DOES THIS PERFORMANCE EVALUATION GUARANTEE, IMPLY, OR STATE PERFORMANCE OF THE UNIT IS MAINTAINED DURING OR AFTER A DESIGN EVENT.

This Performance Evaluation is being issued in accordance with the requirements of the **Florida Building Code Ninth Edition (2026)** per ASCE 7, FBC Building Ch. 16, FBC Building Sections 104.11 & 1522.2, FBC Existing Building Sections 707.1 & 707.2, FBC Mechanical 301.15, FBC Residential M1202.1 & M1301.1, and FS 471.025. The product noted in this performance evaluation has been tested and/or evaluated as summarized herein.

SUBSTANTIATING DATA:

• Product Evaluation Documents
Substantiating documentation has been submitted to provide this performance evaluation and is summarized in the sections below.

• Structural Engineering Calculations
Structural engineering calculations have been prepared which evaluate the product based on comparative and/or rational analysis to qualify the following design criteria:

- Max. allowable (ASD) lateral & uplift wind pressures certified herein
- Max. allowable sliding forces, uplift forces, & overturning moments (see Unit Reactions from Wind Guide on last page)
- Tie-down configuration and anchor capacity for concrete, aluminum, and steel host substrates (host by others).
- Unit panel wind pressure connection integrity

Calculation summary is included in this product evaluation and appears herein.

LIMITATIONS & CONDITIONS OF USE:
Use of the product(s) listed herein shall be in strict accordance with this product evaluation as noted herein and manufacturer-provided model specifications. Installation shall conform to the minimum standards stated in the referenced building code(s) in addition to the specifications and limitations stated herein. See herein for complete limitations & conditions of use.

OPTIONS:
This evaluation is valid for the models described herein. The critical unit designs have been determined and used in this evaluation. Any structural changes outside of the design as described herein would void this certification.

UNIT CASING MATERIALS:
Unit casing materials and fasteners may vary across units. See next page for further information on unit constructions.

TERMINOLOGY:
See herein for definitions of terms and abbreviations used in this evaluation.

STRUCTURAL PERFORMANCE:
Models referenced herein are subject to the following design limitations:

Maximum Rated ASD Wind Pressures*:
± 148 psf Lateral, 117 psf Uplift

- Required design wind pressures shall be determined according to the guide provided in the Appendix (see last page of this document) or on a site-specific basis in accordance with ASCE 7 and applicable sections of the building code(s) being referenced in accordance with ASD methodology.
- Required design pressures shall be less than or equal to the maximum pressures listed herein.
- *Maximum Rated Wind Pressures indicate the maximum pressures that all units listed herein are approved for. Valid for at-grade and rooftop applications. See limitations herein.
- Valid for use inside and outside the High-Velocity Hurricane Zone (HVHZ).
- Site-specific wind analysis may produce alternate limitations provided maximum rated wind pressures stated herein are not exceeded.

VISIT ECALC.IO/ALLIED
FOR MORE INFORMATION AND DEVIATIONS TO THIS EVALUATION OR SCAN THE QR CODE TO THE RIGHT >

Engineer Signature & Seal:

FRANK L. BENNARDO LICENSE No 0046549 STATE OF FLORIDA PROFESSIONAL ENGINEER

Digitally signed by Frank Bennardo
Date: 2026.08.17 10:32:39 -04'00'

August 17, 2026

Frank Bennardo, P.E.
ENGINEERING EXPRESS®
FL PE #0046549 FLCA #9885

*PRINTED COPIES OF THIS DOCUMENT ARE NOT CONSIDERED SIGNED & SEALED. SIGNATURE MUST BE VERIFIED ON ANY ELECTRONIC COPIES.
***FOR FLORIDA STATEWIDE PRODUCT APPROVALS (FSAs) REGISTERED & APPROVED WITH THE STATE OF FLORIDA:** ORIGINAL, SEALED COPIES OF APPROVED FLORIDA PRODUCT APPROVALS ARE NOT REQUIRED FOR PERMIT. SEE **ECALC.IO/SEAL** TO LEARN MORE.

UNIT CASING MATERIALS, CONTINUED

Unit Construction	Unit Casing Materials	Fastener Information
Type "A" Construction	Unit Base, Top Panel: 18 GA, Fy = 26.1 ksi min. galv. DQSK steel Corner Posts, Mullion, Piping Panel, Control Box, Control Box Cover: 20 Ga, Fy = 26.1 ksi min. galv. DQSK steel Control Box Bottom (4 Sided Unit): 20 Ga, Fy = 25 ksi min. galv. CS Type C steel Louvered Panels, Coil Guard: 24 GA, Fy = 26.1 ksi min. galv. DQSK steel	Unit casing components are fastened together with #10-16, 2100 lb min. tensile strength (ultimate) and 1400 lb min. shear strength (ultimate) SMS.
Type "B" Construction	Unit Base: 18 GA, Fy = 15 ksi min. galv. EDDS steel Top Panel: 18 GA, Fy = 25 ksi min. galv. DDS steel Control Box: 18 Ga, Fy = 30 ksi min. galv. CS Type B steel Control Box Cover, Control Box Bottom (4 Sided Unit): 18 Ga, Fy = 20 ksi min. galv. DDS steel Corner Posts, Mullion, Piping Panel: 24 Ga, Fy = 30 ksi min. galv. CS Type B steel Louvered Panels, Coil Guard: 24 GA, Fy = 30 ksi min. galv. CS Type B steel	Unit casing components are fastened together with #8-18, 1575 lb min. tensile strength (ultimate) and 1000 lb min. shear strength (ultimate) SMS.

NOTE: See manufacturer for more information on unit construction.

REMAINDER OF PAGE IS INTENTIONALLY LEFT BLANK

MODEL INFORMATION (Page 1 of 2)

Type "A" Construction				
Model Number	Coil Protection	Unit Dimensions (in.)		
		Width	Depth	Height
4AC16LT24*	Louver	26.75	24.75	29.75
4HP16LT24*	Louver	26.75	24.75	33.75
4AC16LT36*	Louver	31.25	29.38	29.75
4HP16LT36*	Louver	31.25	29.38	37.75
4AC16LT48*	Louver	31.25	29.38	37.75
4AC16LT60*	Louver	31.25	29.38	43.75

Type "A" Construction				
Model Number	Coil Protection	Unit Dimensions (in.)		
		Width	Depth	Height
4HP16LT48*	Louver	37.75	35.75	37.75
4HP16LT60*	Louver	37.75	35.75	43.75
4HP18V36*	Louver	31.25	29.38	33.75
4HP18V60*	Louver	31.25	29.38	43.75
7HP19V36*	Louver	29.38	31.25	33.75
7HP19V60*	Louver	29.38	31.25	43.75

Type "B" Construction				
Model Number	Coil Protection	Unit Dimensions (in.)		
		Width	Depth	Height
4AC14B18P*	Wire Guard	24.25	24.25	29.25
4AC14B24P*	Wire Guard	28.25	28.25	29.25
4AC14B30P*	Wire Guard	28.25	28.25	37.25
4AC14B36P*	Wire Guard	28.25	28.25	29.25
4AC14B42P*	Wire Guard	28.25	28.25	37.25
4AC14B48P*	Wire Guard	28.25	28.25	37.25
4AC14B60P*	Wire Guard	32.25	32.25	43.25
4AC16L18P*	Louver	24.25	24.25	29.25
4AC16L24P*	Louver	28.25	28.25	29.25
4AC16L30P*	Louver	28.25	28.25	37.25
4AC16L36P*	Louver	28.25	28.25	29.25
4AC16L41P*	Louver	28.25	28.25	37.25
4AC16L42P*	Louver	28.25	28.25	37.25
4AC16L47P*	Louver	32.25	32.25	33.25
4AC16L48P*	Louver	28.25	28.25	37.25
4AC16L59P*	Louver	32.25	32.25	43.25
4AC16L60P*	Louver	32.25	32.25	43.25
4AC17L18*	Louver	28.25	28.25	29.25
4AC17L24*	Louver	28.25	28.25	37.25
4AC17L30*	Louver	28.25	28.25	29.25
4AC17L36*	Louver	28.25	28.25	37.25
4AC17L41*	Louver	32.25	32.25	33.25
4AC17L42*	Louver	32.25	32.25	33.25
4AC17L47*	Louver	32.25	32.25	33.25
4AC17L48*	Louver	28.25	28.25	43.25
4AC17L59*	Louver	32.25	32.25	43.25
4AC17L60*	Louver	32.25	32.25	43.25
4HP14B18P*	Wire Guard	28.25	28.25	43.25
4HP14B24P*	Wire Guard	28.25	28.25	43.25
4HP14B30P*	Wire Guard	28.25	28.25	43.25
4HP14B36P*	Wire Guard	28.25	28.25	37.25
4HP14B42P*	Wire Guard	32.25	32.25	37.25
4HP14B48P*	Wire Guard	32.25	32.25	37.25
4HP14B60P*	Wire Guard	32.25	32.25	43.25
4HP15L18P*	Louver	28.25	28.25	43.25
4HP15L24P*	Louver	28.25	28.25	43.25
4HP15L30P*	Louver	28.25	28.25	43.25
4HP15L36P*	Louver	28.25	28.25	37.25

Type "B" Construction				
Model Number	Coil Protection	Unit Dimensions (in.)		
		Width	Depth	Height
4HP15L42P*	Louver	32.25	32.25	37.25
4HP15L48P*	Louver	32.25	32.25	37.25
4HP15L60P*	Louver	32.25	32.25	43.25
4HP16L18P*	Louver	28.25	28.25	43.25
4HP16L24P*	Louver	28.25	28.25	33.25
4HP16L30P*	Louver	28.25	28.25	33.25
4HP16L36P*	Louver	32.25	32.25	33.25
4HP16L42P*	Louver	32.25	32.25	43.25
4HP16L48P*	Louver	32.25	32.25	43.25
4HP16L60P*	Louver	32.25	32.25	43.25
4HP17L18P*	Louver	28.25	28.25	43.25
4HP17L24P*	Louver	28.25	28.25	43.25
4HP17L30P*	Louver	28.25	28.25	33.25
4HP17L36P*	Louver	32.25	32.25	33.25
4HP17L42P*	Louver	32.25	32.25	37.25
4HP17L48P*	Louver	32.25	32.25	37.25
4HP17L60P*	Louver	32.25	32.25	43.25
7AC14F18*	Louver	28.25	28.25	29.25
7AC14F24*	Louver	28.25	28.25	37.25
7AC14F30*	Louver	28.25	28.25	29.25
7AC14F36*	Louver	28.25	28.25	37.25
7AC14F41*	Louver	32.25	32.25	33.25
7AC14F42*	Louver	32.25	32.25	33.25
7AC14F47*	Louver	32.25	32.25	33.25
7AC14F48*	Louver	28.25	28.25	43.25
7AC14F59*	Louver	32.25	32.25	43.25
7AC14F60*	Louver	32.25	32.25	43.25
7AC17T24*	Louver	28.25	28.25	29.25
7AC17T36*	Louver	28.25	28.25	29.25
7AC17T48*	Louver	28.25	28.25	29.25
7AC17T60*	Louver	32.25	32.25	43.25
7HP14F18*	Louver	28.25	28.25	43.25
7HP14F24*	Louver	28.25	28.25	43.25
7HP14F30*	Louver	28.25	28.25	33.25
7HP14F36*	Louver	32.25	32.25	33.25
7HP14F42*	Louver	32.25	32.25	37.25
7HP14F48*	Louver	32.25	32.25	37.25
7HP14F60*	Louver	32.25	32.25	43.25

MODEL INFORMATION (Page 2 of 2)

Type "B" Construction				
Model Number	Coil Protection	Unit Dimensions (in.)		
		Width	Depth	Height
BAB714S18*	Wire Guard	28.25	28.25	29.25
BAB714S24*	Wire Guard	28.25	28.25	37.25
BAB714S30*	Wire Guard	28.25	28.25	29.25
BAB714S36*	Wire Guard	28.25	28.25	37.25
BAB714S42*	Wire Guard	32.25	32.25	33.25
BAB714S48*	Wire Guard	28.25	28.25	43.25
BAB714S60*	Wire Guard	32.25	32.25	43.25
BHB714S18*	Wire Guard	28.25	28.25	43.25
BHB714S24*	Wire Guard	28.25	28.25	43.25
BHB714S30*	Wire Guard	28.25	28.25	33.25
BHB714S36*	Wire Guard	32.25	32.25	33.25
BHB714S42*	Wire Guard	32.25	32.25	37.25
BHB714S48*	Wire Guard	32.25	32.25	37.25
BHB714S60*	Wire Guard	32.25	32.25	43.25

MODEL INFORMATION NOTES:
All unit net weights shall be between 100 lb and 375 lb. Model numbers, dimensions, and weights listed herein are based on information provided by the client. Please contact Report Holder and/or manufacturer for more information. Louver directions may be horizontal of vertical. See herein for unit views and definitions of dimensions. Model number characters following the asterisk (*) do not pertain to this structural certification and may be any combination of numbers or characters.

REMAINDER OF PAGE IS INTENTIONALLY LEFT BLANK

CABINET TYPES, VIEWS, & DIMENSIONS

LOUVER UNITS

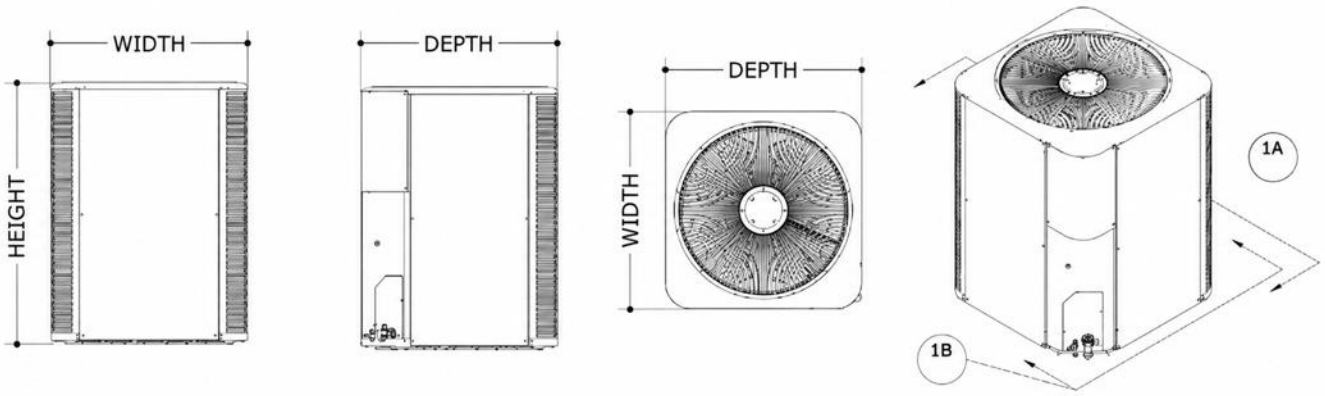

1A **FRONT VIEW** SCALE: NTS

1B **SIDE VIEW - RIGHT** SCALE: NTS

1C **TOP VIEW** SCALE: NTS

1D **ISOMETRIC VIEW** SCALE: NTS

NOTE: Unit depictions in Details 1A through 1D are for illustrative purposes only. Actual units may vary slightly in appearance. Louvers on wall panels are not shown. Louver direction may be horizontal or vertical. See "Model Information" on pages 3 through 5 for louver / wire guard designations.

WIRE GUARD UNITS

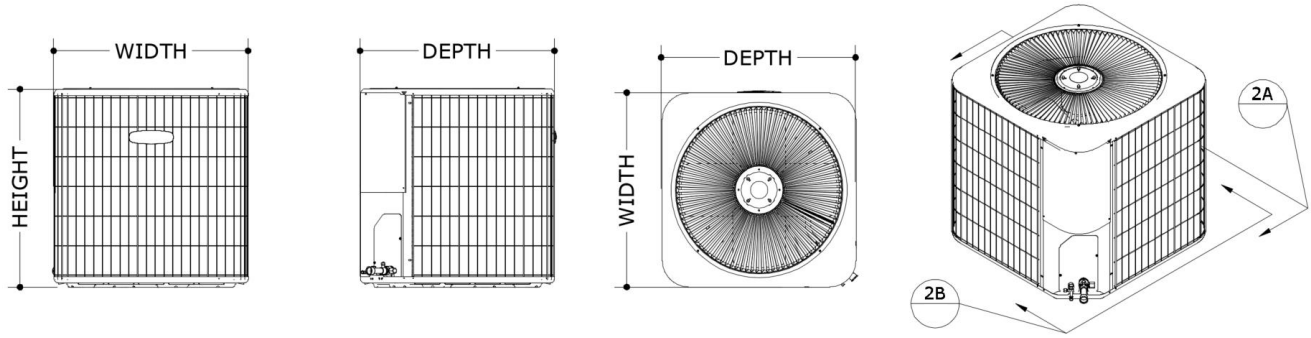

2A **FRONT VIEW** SCALE: NTS

2B **SIDE VIEW - LEFT** SCALE: NTS

2C **TOP VIEW** SCALE: NTS

2D **ISOMETRIC VIEW** SCALE: NTS

NOTE: Unit depictions in Details 2A through 2D are for illustrative purposes only. Actual units may vary slightly in appearance. See "Model Information" on pages 3 through 5 for louver / wire guard designations.

REMAINDER OF PAGE IS INTENTIONALLY LEFT BLANK

PRODUCT INSTALLATION

TIE-DOWN CLIP SCHEDULE

Note: Wind pressures listed are allowable (ASD) wind pressures.

Cabinet Type	Wind Pressure Lateral (Uplift)	# of Tie-Down Clips Required
Louver	± 67 psf (0 psf)	4
	± 90 psf (72 psf)	8
	± 120 psf (95 psf)	8
	± 148 psf (117 psf)	8
Wire Guard	± 67 psf (0 psf)	8
	± 90 psf (72 psf)	8
	± 120 psf (95 psf)	8
	± 148 psf (117 psf)	8

TIE-DOWN CLIP SCHEDULE NOTES:

Louver Units: For at-grade pressures up to ± 67 psf lateral (0 psf uplift), position (1) tie-down clip per corner of unit, (4) total. For rooftop pressures up to ± 148 psf lateral (117 uplift), position (2) tie-down clips per corner of unit (8) total. See tie-down layouts on the following pages. Tie-down clip shall sit flush on host structure and flush against unit corner post. Fasten tie-down clip to corner post with (4) #10 SS316 self-drilling screws with 0.395" min. OD washers, typ. Utilize any (4) slots that have flush, solid contact with the corner post, (1) screw per slot, typ. (See Detail 1/6). Ensure all screws fully engage with the unit corner posts. Fasten tie-down clips to host structure using (1) anchor per tie-down clip per the "Anchor Schedule to Host Structure" table shown herein.

WARNING: HIGH PRESSURE REFRIGERANT HAZARD
Exercise caution while installing screws into the unit to avoid piercing refrigerant lines behind unit base / corner posts. Refrigerant fluid is under high pressure.

Wire Guard Units: Position (2) tie-down clips per corner of unit, (8) total (see tie-down installation layout on the following pages). Provide 4" min. spacing between neighboring tie-down clips. Each tie-down clip shall sit flush on host structure and flush against vertical face of unit base (See Detail 2/8). Fasten tie-down clip to base rail with (2) #10 SS316 self-drilling screws with 0.395" min. OD washers, typ. Utilize the (2) slots that make flush contact with vertical face of unit base, (1) screw per slot, typ. (See Detail 2/8). Ensure all screws fully engage with solid sections of unit base (do not position tie-down clips where holes/slots in the base rail interfere with screw connections). Fasten each tie-down clip to host structure using (1) anchor per the "Anchor Schedule to Host Structure" table shown herein.

MIAMI TECH TIE-DOWN CLIP

1

Miami Tech CUTD 1" wide and 8" tall ASTM A653 galvanized steel, 0.07" min. thick.

Fasten clip to host structure per the "Anchor Schedule to Host Structure" table and notes.

Fasten clip to unit base rail per the "Tie-Down Clip Schedule" table and notes.

Miami Tech Kit #'s:
LACUTD8KG - At-Grade or Slab Mounts
LACUTD8KR - Rooftop or Rail Mounts

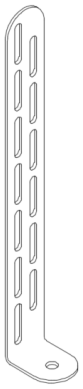

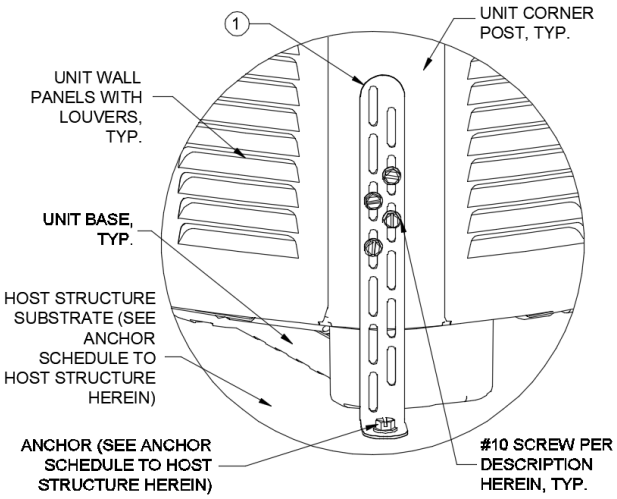

TIE-DOWN CLIP ATTACHMENT TO LOUVER UNITS, TYP.

1/6 SCALE: NTS ISOMETRIC VIEW

Note: Wind pressures listed are allowable (ASD) wind pressures.

ANCHOR SCHEDULE TO HOST STRUCTURE

Wind Pressure Lateral (Uplift)	3000 psi min. Concrete	1/8" min. thick Fy = 36 ksi min. Steel	1/8" min. thick 6061-T6 Aluminum
± 67 psf (0 psf)	A	N/A	N/A
± 90 psf (72 psf)	N/A	B	B
± 120 psf (95 psf)	N/A	B	B
± 148 psf (117 psf)	N/A	B	B

ANCHOR SCHEDULE TO HOST STRUCTURE NOTES:

All host structures described in the anchor schedule are by others. Anchors shall be selected per site-specific wind pressures and host structure. Wind pressures up to ± 67 psf lateral (0 psf uplift) and below shall use the anchor specified in the ± 67 psf lateral (0 psf uplift) tier. Site-specific wind pressures that fall in-between pressure tiers shall use the anchor specified by the higher pressure tier.

Anchor Schedule to Host Structure Key:
A: 1/4" Ø DeWalt UltraCon+ or equivalent with 1" min. OD washer, 1.75" embedment, and 3" min. edge distance from any edge of concrete, typ.
B: 1/4" Ø SAE GR. 5 or SS Thru Bolt with 5/8" min. OD washers top and bottom, typ. Provide 1/2" min. edge distance between Thru Bolt and any edge of substrate, typ.
N/A: Not applicable.

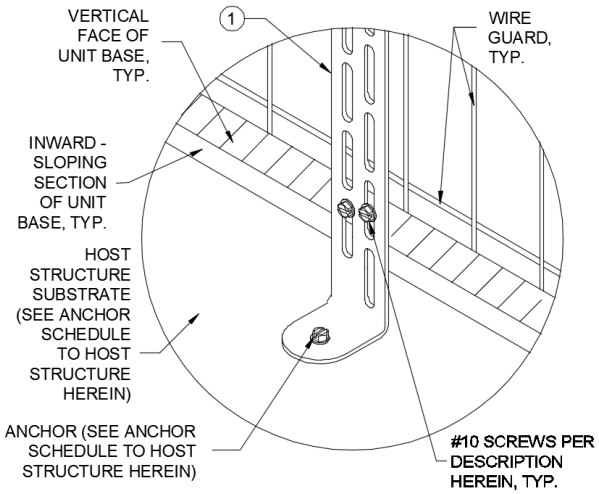

TIE-DOWN CLIP ATTACHMENT TO WIRE GUARD UNITS, TYP.

2/6 SCALE: NTS ISOMETRIC VIEW

PRODUCT INSTALLATION CONTINUED

TIE-DOWN STRAP SCHEDULE

Note: Wind pressures listed are allowable (ASD) wind pressures.

Cabinet Type	Wind Pressure Lateral (Uplift)	# of Straps
Louver	± 67 psf (0 psf)	0
	± 90 psf (72 psf)	2
	± 120 psf (95 psf)	2
	± 148 psf (117 psf)	2
Wire Guard	± 67 psf (0 psf)	0
	± 90 psf (72 psf)	2
	± 120 psf (95 psf)	2
	± 148 psf (117 psf)	2

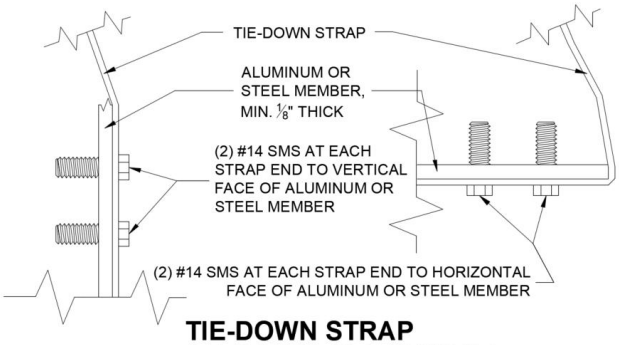

TIE-DOWN STRAP ATTACHMENT TO HOST

1/7 SCALE: NTS SECTION VIEW

TIE-DOWN STRAP SCHEDULE NOTES:

1. Tie-down straps are required for rooftop applications.
2. Tie-down straps shall be 1" min. wide, 22 GA (0.03") min. thick, Fy = 30 ksi min. galvanized steel straps.
3. Tie-down straps shall be wrapped around unit and roof stand rail per Detail 1/9, and each tie-down strap shall be tightened to 50 lb.
4. (Optional) Neoprene pads may be placed in-between unit and strap to protect the unit from damage.

ROOFTOP INSTALLATION DETAILS

For installation conditions where both:

i.) The unit in question is adequately supported by the roof stand rails, and
ii.) The tie-down clip and strap requirements are satisfied using only the roof stand rails,

It is permissible to forgo the roof frame specified herein.

For all other conditions, a roof frame shall be implemented per the specifications herein, or site- specific engineering is required. Support angles per the current version of NOA #24-0319.03 are included in Miami Tech kit #LACUTD8KR.

NOTE: For Detail 3/7, the unit depicted is for illustrative purposes only and may be any of the cabinet types listed herein. Louvers on panels are not shown. See tie-down layouts on the next page.

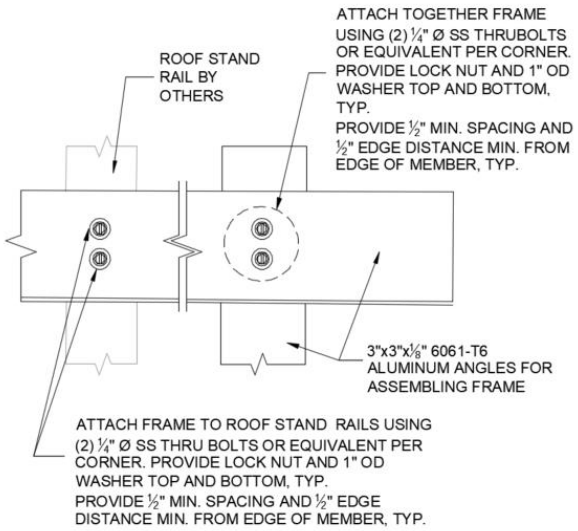

ROOF FRAME TYPICAL CONNECTIONS

2/7 SCALE: NTS PLAN VIEW

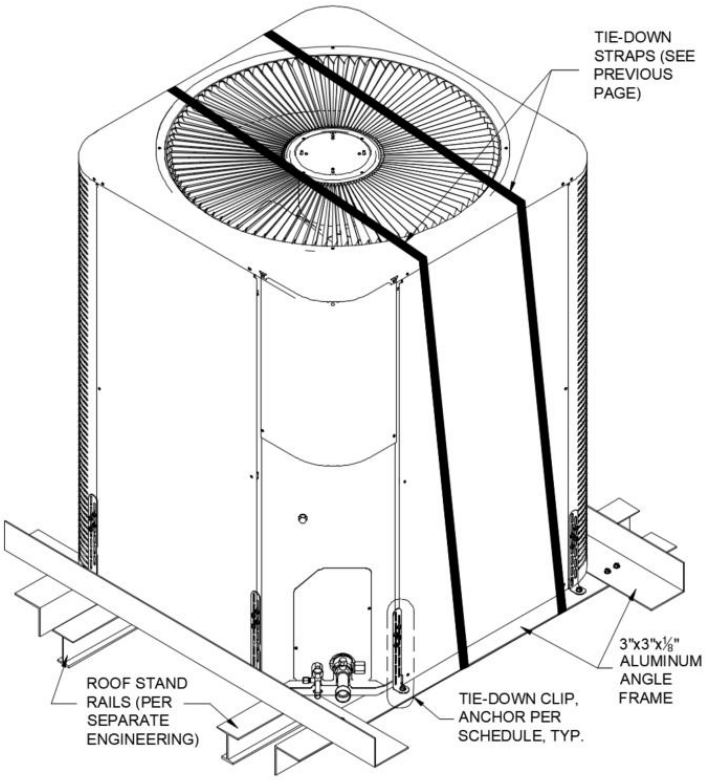

UNIT MOUNT ON ROOF STAND AND FRAME

3/7 SCALE: NTS ISOMETRIC VIEW

TIE-DOWN CLIP & STRAP LAYOUTS

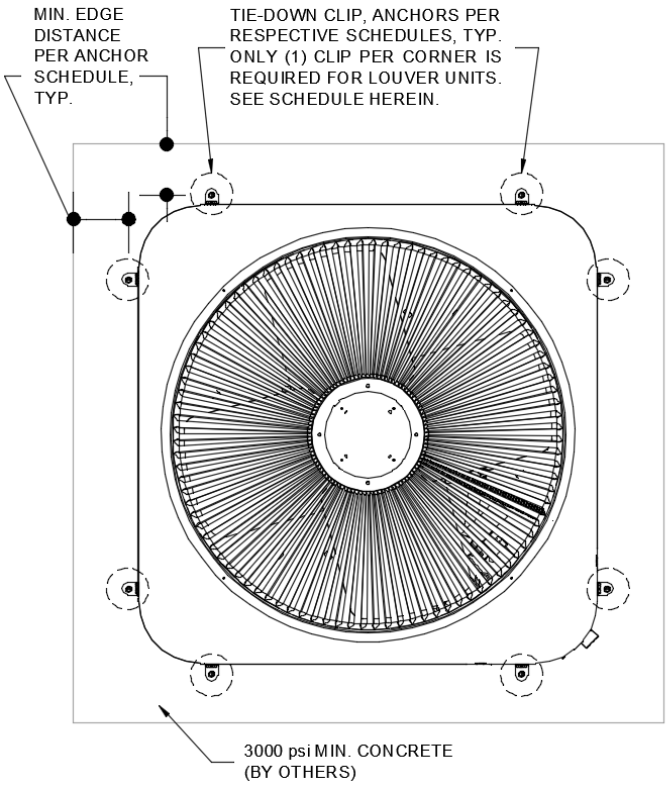

1/8 **AT-GRADE LAYOUT**
SCALE: NTS PLAN VIEW

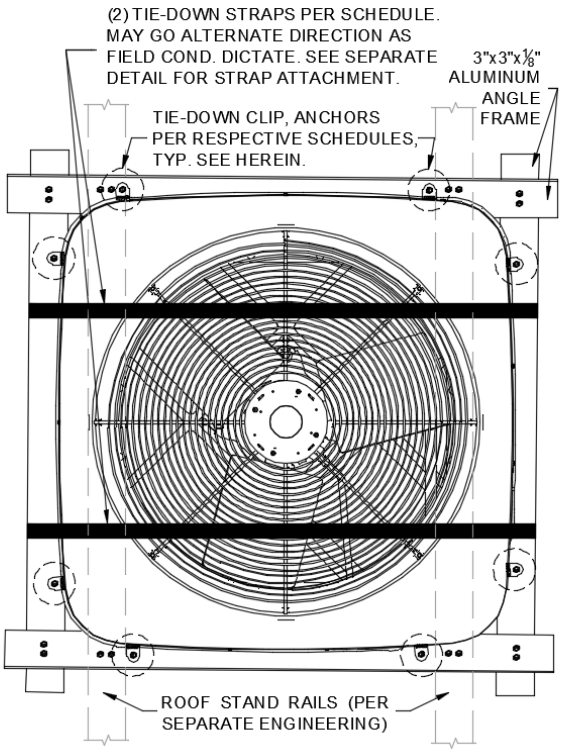

2/8 **ROOFTOP LAYOUT**
SCALE: NTS PLAN VIEW

NOTE: The units depicted on this page are for illustrative purposes only and may be any of the cabinet types listed herein.

NOTE: Units may be positioned on roof stand rails along the unit depth or unit width as long as specifications stated herein are satisfied.

Miami Tech Kit #'s:
LACUTD8KG - At-Grade or Slab Mounts
LACUTD8KR - Rooftop or Rail Mounts

PANEL DESIGNATIONS: LOUVER UNITS

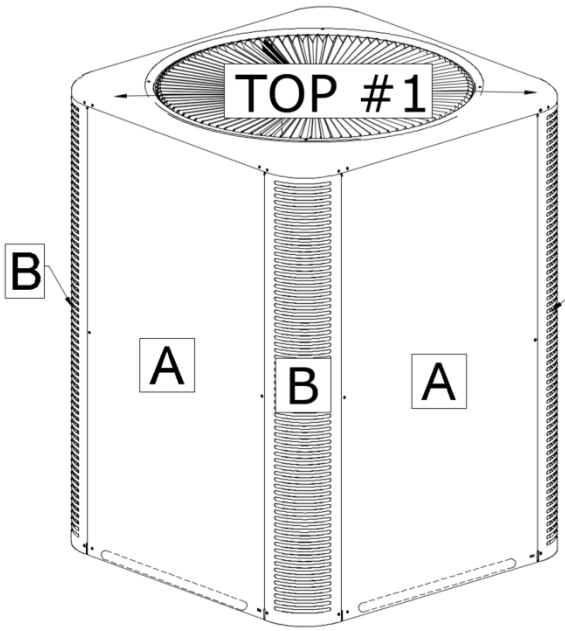

1/9 FRONT ISOMETRIC VIEW
SCALE: NTS

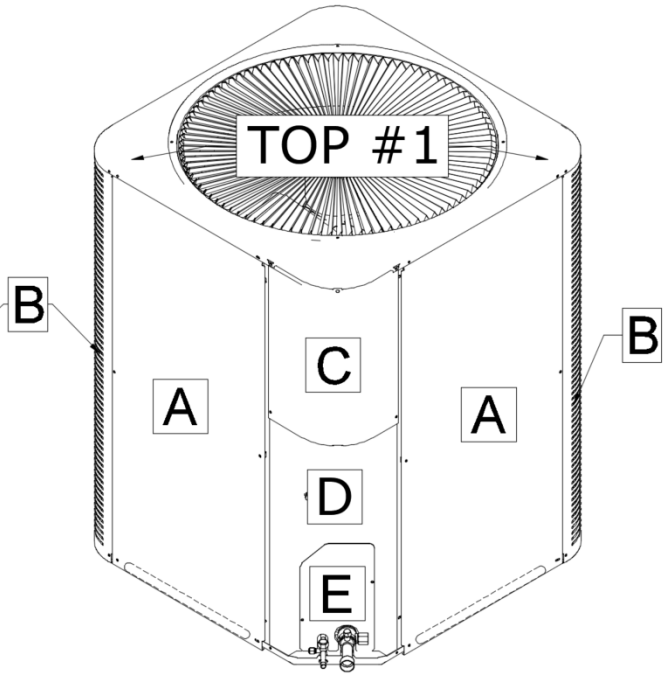

2/9 BACK ISOMETRIC VIEW
SCALE: NTS

NOTE: The unit depictions in Details 1/9 and 2/9 are for illustrative purposes only. Actual units may vary slightly in appearance. Louvers on Panel A's (Wall Panels) are not shown. Louver direction may be horizontal or vertical. Circled regions above illustrate additional screw locations per the additional screw directives below. This page applies to louver units; see pages 3 through 6 for cabinet type classifications.

PANEL INTEGRITY SUMMARY: LOUVER UNITS

Up to ± 67 psf Lateral & 53 psf Uplift Wind Pressures		
Panel Designation	**Additional Screws Required**	**Additional Screws Directive**
Top Panel #1	0	No additional screws required for Top Panel #1.
Panel A (Wall Panel)	0	No additional screws required for Panel A's (Wall Panels).
Panel B (Corner Post)	0	No additional screws required for Panel B's (Corner Posts).
Panel C (Control Box Cover)	0	No additional screws required for Panel C (Control Box Cover).
Panel D	0	No additional screws required for Panel D.
Panel E	0	No additional screws required for Panel E.
NO ADDITIONAL SCREWS REQUIRED		

Up to ± 148 psf Lateral & 117 psf Uplift Wind Pressures		
Panel Designation	**Additional Screws Required**	**Additional Screws Directive**
Top Panel #1	0	No additional screws required for Top Panel #1.
Panel A (Wall Panel)	4	Install (4) screws at bottom of each panel into Unit Base. Note: (4) per Panel A, (16) screws total.
Panel B (Corner Post)	0	No additional screws required for Panel B (Corner Posts).
Panel C (Control Box Cover)	0	No additional screws required for Panel C (Control Box Cover).
Panel D	0	No additional screws required for Panel D.
Panel E	0	No additional screws required for Panel E.
(16) ADDITIONAL SCREWS REQUIRED IN TOTAL		

Note: Wind pressures listed are allowable (ASD) wind pressures.

Panel Integrity Summary Notes:

WARNING: HIGH PRESSURE REFRIGERANT HAZARD
Exercise caution while installing additional screws into the unit to avoid piercing refrigerant lines behind panels. Refrigerant fluid is under high pressure.

No additional screws are required for wind pressures up to ± 67 psf lateral & 53 psf uplift.
Calculations were performed according to the information provided by the client for a worst-case unit (which was determined by this office to be a (39.5" W x 35.5" D x 47" H unit). Panels were assigned various porosities depending on the ratio of louver area to total panel area, for tension and shear calculation purposes. Screw quantities were checked to reinforce unit panels as needed. Additional screws shall be #8 min. diameter SAE Gr. 2 or stronger SMS. They shall be positioned according to the "Additional Screws Directive" in the tables above and Details 1/9 and 2/9. Provide 1" min. spacing between neighboring screws (existing or additional). Distribute additional screws evenly between left and right sides of the panel U.N.O.

Validate that each additional screw joins the panel to the 24 GA min. thick steel member. Screw sizes, quantities on panels, and panel characteristics are according to the client's description. 1000 hours of ASTM B117 are required with zero red rust for all additional screws.

PANEL DESIGNATIONS: WIRE GUARD UNITS

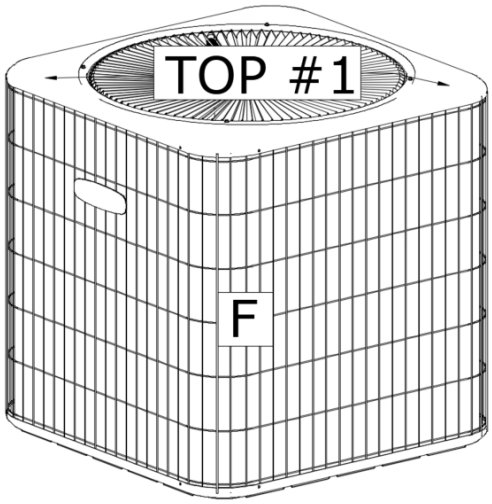

1/10 **FRONT ISOMETRIC VIEW**
SCALE: NTS

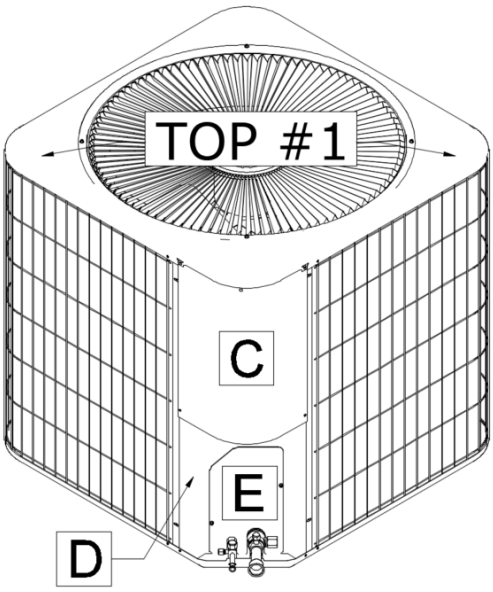

2/10 **BACK ISOMETRIC VIEW**
SCALE: NTS

NOTE: The unit depictions in Details 1/10 and 2/10 are for illustrative purposes only. Actual units may vary slightly in appearance.This page applies to wire guard units; see pages 3 through 6 for cabinet type classifications.

PANEL INTEGRITY SUMMARY: WIRE GUARD UNITS

Up to ± 148 psf Lateral & 117 psf Uplift Wind Pressures		
Panel Designation	**Additional Screws Required**	**Additional Screws Directive**
Top Panel #1	0	No additional screws required for Top Panel #1.
Panel C (Control Box Cover)	0	No additional screws required for Panel C (Control Box Cover).
Panel D	0	No additional screws required for Panel D.
Panel E	0	No additional screws required for Panel E.
Panel F (Wire Guard)	N/A	Panel F (Wire Guard) wraps around the four sides of the unit and fastens to the Top Panel and base pan via welding. The weld has been separately examined and deemed to adequately resist the uplift forces acting on the Top Panel.
NO ADDITIONAL SCREWS REQUIRED		

Note: Wind pressures listed are allowable (ASD) wind pressures.

Panel Integrity Summary Notes:

No additional screws are required for wind pressures up to ± 148 psf lateral & 117 psf uplift.
Calculations were performed according to the information provided by the client for a worst-case unit (which was determined by this office to be a (32.25" W x 32.25" D x 43.25" H unit). Panels were assigned various porosities depending on the ratio of louver and/or opening areas to total panel area, for tension and shear calculation purposes. Screw quantities were checked to reinforce unit panels as needed. Weld strength was considered per client-provided specifications.

TERMINOLOGY, CONTINUED

The following abbreviations may appear in this report: “Addtl.” for “additional”, “AHJ” for “Authority Having Jurisdiction”, “alum” for “aluminum”, “ASCE” for “American Society of Civil Engineers”, “ASD” for “Allowable Stress Design”, “ASTM” for “American Society for Testing and Materials”, “EA.” for “each”, “E.D.” for edge distance”, “EDDS” for “extra deep drawing steel”, “e.g.” for “*exempli gratia*” or “for example”, “equiv.” for “equivalent”, “FBC” for “Florida Building Code”, “FEA” for “Finite Element Analysis”, “FLCA” for “Florida Certificate of Authorization”, “FS” for “Florida Statutes”, “Fu” for “ultimate tensile strength” or “ultimate tensile stress”, “Fy” for “yield strength” or “yield stress” “GA” for “gauge”, “GR." or “Gr.” for “grade”, “HVAC” for “heating, ventilation, and air conditioning”, “HVHZ” for “High-Velocity Hurricane Zone”, “i.e. ” for “*id est*” or “in other words”, “in” for “inch”, “lb” for “pound (force)”, “max.” for “maximum”, “min.” for “minimum”, “mm” for “millimeter”, “NTS” for “not to scale”, “O.C. ” for “on center”, “OD” for “outer diameter”, “pcf” for “pounds (force) per cubic foot”, “PE” for “Professional Engineer”, “qty” for “quantity”, “SAE” for “Society of Automotive Engineering”, “SMS” for “sheet metal screws”, “SS” for “stainless steel”, “TER” for “Technical Evaluation Report”, “typ.” for “typical”, “ult” for “ultimate loads”, “U.N.O.” for “unless noted otherwise”, “UTS” for “ultimate tensile strength” or “ultimate tensile stress”, “WLL” for “working load limit”, “w/o” for “without”, “YS” for “yield strength” or “yield stress”, “#” for “number”, “&” for “and”, and “Ø” for “diameter”. Please visit ecalc.io/glossary for additional abbreviation clarifications.

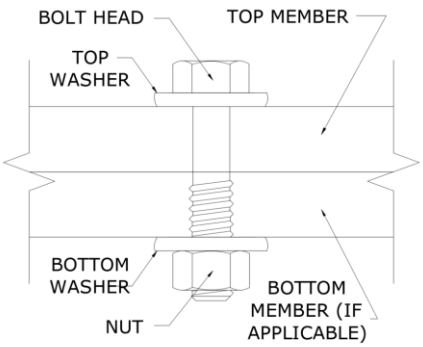

SAMPLE THRU-BOLT

SCALE: NTS SECTION VIEW

The term “Thru-Bolt” or through bolt, if used herein, refers to a bolt passing through the member(s) in contact and is fastened by a nut at the end opposite the screw head. Nut shall be equivalent to or exceed the strength of the bolt U.N.O. Nut shall be sized to accommodate the same nominal diameter as the bolt U.N.O. See diagram above-right for a sample thru-bolt configuration. For instances herein which list material specifications as *“[material type] or stronger”:* U.N.O. herein, the term “stronger” refers to a material with a UTS value equal to or greater than the UTS value of the stated material type. Consult appropriate literature for established material UTS values. Equivalent steel gauge thicknesses as used in this evaluation, U.N.O., are as follows: 22 GA (.030”), 20 GA (.036”), 18 GA (.048”), 16 GA (.060”), 14 GA (.075”), 12 GA (.098”).

LIMITATIONS & CONDITIONS OF USE, CONTINUED

Use of this product shall be in strict accordance with this product evaluation as noted herein. The supporting host structure shall be designed to resist all superimposed loads as determined by others on a site-specific basis as may be required by the authority having jurisdiction. Host structure conditions which are not accounted for in this product’s respective anchor schedule shall be designed for on a site-specific basis by a registered Professional Engineer. No evaluation is offered for the host supporting structure by use of this document. Adjustment factors noted herein and the applicable building codes must be considered, where applicable. Product components shall be of the material(s) specified in the manufacturer-provided product specifications. All supporting components which are permanently installed shall be protected against corrosion, contamination, and other such damage at all times. For permanent outdoor installations, all exposed anchors, fasteners, connectors, and metal plates shall be corrosion resistant. Corrosion resistance may be provided by inherent material composition or, where permitted by code, by an approved protective coating or galvanization. Where applicable near a saltwater coastline, such components shall comply with FBC Section 1711, including applicable requirements for exposed, protected, or enclosed conditions. Materials, coatings, and finishes shall be compatible with connected materials, and protective coatings shall be continuous over exposed surfaces. Fasteners used with aluminum members shall also comply with Section J.3.7.2 of the Aluminum Design Manual, “Specification for Aluminum Structures.” Substitution of components from alternate manufacturers, or with different materials, coatings, or finishes, shall not be assumed equivalent and may require additional engineering review or site-specific analysis. All fasteners and anchors shall be installed in accordance with the applicable provisions specified herein in addition to the anchor/fastener manufacturers’ published installation instructions. *Fasteners must penetrate (3) pitches minimum beyond the thread plane of the connecting members in contact. For thru-bolt connections, provide (3) pitches minimum beyond end of nut. For screw connections, provide (3) pitches minimum beyond the bottom member. See Sample Thru-Bolt Detail herein.

All of the wind-resisting exterior panels (with accompanying retrofits) individually meet or exceed their capacity to resist the design wind loads as stated in the calculations as required by the codes and standards stated herein. Due to the indeterminate nature of these units, distortion, deflection, and material deformation cannot be accurately evaluated, but with the diaphragm action of external components and internal stiffeners, the base unit (with accompanying retrofits stated herein as applicable) has the capacity to withstand the design wind loads without detaching from the unit and becoming flying debris.

Survivability: This performance evaluation is valid for a newly installed unit and do not include certification of the product beyond a design event or if impacted by any debris. Inspections shall be implemented annually by the end user and after every named storm. All fasteners and cabinet components are to be verified, and all damaged, loose, corroded and/or broken fasteners and cabinet components shall be replaced to ensure structural integrity against hurricane wind forces. Contact this office for any reevaluation needs or as designated by the Authority Having Jurisdiction.

Durability: Components or component assemblies shall not deteriorate, crack, fail, or lose functionality due to galvanic corrosion or weathering. All supporting components which are permanently installed shall be protected against corrosion, contamination, and other such damage at all times. Each component or component assembly shall be supported and oriented in its intended installation position. All exposed plastic components shall be certified to resist sunlight exposure as specified by ASTM B117, or ASTM G155 in Broward or Miami Dade counties.

Extent of Certification: Certification pertains to the overall structural integrity of the unit components listed within the evaluation as required by code, subject to the limitations and criteria stated herein. Operability during or after a design event is not included in this certification. Water infiltration is outside the bounds of this certification. No other certifications are intended other than as described herein. This evaluation alone does not offer any evaluation for large missile impact debris or cyclic wind requirements unless specifically stated herein.

Proj. #	Remarks	By	Checked	Date	Proj. #	Remarks	By	Checked	Date
20-32205	Prev. Submittal (R1)	ANC	EPR	08/18/22	23-68445	Add new Models	MARH	EPR	06/12/24
23-68445	2023 FBC Update, Add Models	MR/ER	EPR	10/23/23	26-102800	2026 FBC Update, Add Models	MARH	EPR	07/02/26

APPENDIX A: DESIGN WIND PRESSURE GUIDE

Max. Ult. Wind Speed (V_{ult})	Max. MRH (Roof Height)	Exposure Category	Required Design Wind Pressures (ASD)	
			Lateral Pressure	Uplift Pressure
140 mph	At-Grade (0 ft)	C	± 26 psf	0* psf
		D	± 31 psf	0* psf
	100 ft	C	± 63 psf	50 psf
		D	± 71 psf	56 psf
	200 ft	C	± 72 psf	57 psf
		D	± 80 psf	63 psf
175 mph	At-Grade (0 ft)	C	± 40 psf	0* psf
		D	± 49 psf	0* psf
	100 ft	C	± 98 psf	77 psf
		D	± 111 psf	87 psf
	200 ft	C	± 113 psf	89 psf
		D	± 124 psf	98 psf
186 mph	At-Grade (0 ft)	C	± 46 psf	0* psf
		D	± 54 psf	0* psf
	100 ft	C	± 111 psf	87 psf
		D	± 125 psf	99 psf
	200 ft	C	± 127 psf	100 psf
		D	± 140 psf	111 psf

~~100 psf~~ Note: Any table values with the format shown left, if present, indicate design wind pressures and site conditions that are **not approved for use** by this evaluation. Seek additional engineering or contact this firm for design solutions.

DIRECTIVE: This design pressure guide is for reference only and shall be approved for use by the Authority Having Jurisdiction (AHJ). If the design pressures listed in this guide are not used, required design pressures shall be calculated separately. For site-specific scenarios classified as Exposure Category B, the required design pressures stated for Exposure Category C in the above guide shall be used or design pressures shall be calculated separately. For heights and parameters beyond the parameters listed in this guide, visit our Online Calculator via the website link (https://ecalc.io/forces) or QR Code below, or obtain calculations separately by others.

The required ASD design pressures listed in this guide were calculated per the table's listed corresponding site conditions. The project design professional or permitting contractor shall verify that the site-specific conditions are equal to or less than the approved design parameters listed in the guide. Per the note below table: any values shown as "~~XX psf~~", indicate wind pressures and corresponding site conditions that are **not valid for use** with this evaluation (exceeds the max. rated pressures).

*Note: Per the codes and standards referenced herein, uplift is not required for mechanical equipment at-grade. If uplift at-grade is required by the AHJ, contact this firm for a site-specific evaluation.

At-Grade (0 ft MRH) Required Design Pressures:

- ASCE 7 "Design Wind Loads: Other Structures"
- Structure Shape = Square, flat terrain
- Height of structure (unit + stand or curb, if used) = 6 ft max.
- Width of unit = 1 ft min., Depth of unit = 11 in min.

Rooftop (>15 ft MRH) Required Design Pressures:

- ASCE 7 "Design Wind Loads: Other Structures: Rooftop Structures and Equipment for Buildings"
- Structure Shape = Square, flat terrain
- z = up to 7 ft, where z = height of stand or curb + ½ unit height
- Lateral GC_f = 1.90; Uplift GC_f = 1.50

VISIT ECALC.IO/FORCES

FOR DESIGN AID CALCULATORS AND RESOURCES RELATED TO THIS EVALUATION & GUIDES HEREIN, OR SCAN THE QR CODE RIGHT >

UNIT REACTIONS FROM WIND GUIDE

DIRECTIVE: This guide is intended for use by a design professional. Design parameters shall abide all specifications and limitations stated in this evaluation. Design professional shall consider all forces, including seismic and snow loads, per the governing building code. Unit reactions obtained from this guide shall be verified by a registered Professional Engineer. Reactions are applicable for unit-to-host connections only. Sample calculations are provided below.

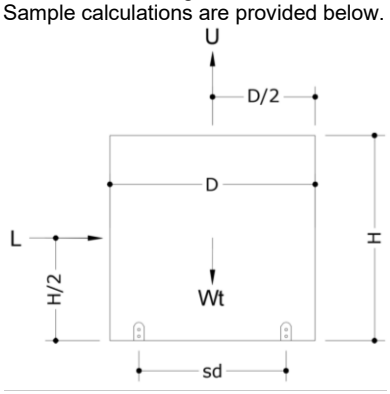

Design Parameters:

- Lateral Wind Pressure, P_lat
- Unit Height, H
- Unit Width, W
- Support Spacing across Depth, sd
- Uplift Wind Pressure, P_up
- Unit Depth, D
- Unit Weight, Wt
- Support Spacing across Width, sw

Unit Reaction Equations:

Long Side (Width x Height):

- Sliding Force, L = P_lat x W x H
- Uplift Force, U = P_up x W x D
- Total Tension per Long Side =
(L x H/2 + U x sd/2 – Wt x 0.6 x sd/2) / sd

Short Side (Depth x Height):

- Sliding Force, L = P_lat x D x H
- Uplift Force, U = P_up x W x D
- Total Tension per Short Side =
(L x H/2 + U x sw/2 – Wt x 0.6 x sw/2) / sw

Example: A (48" W x 36" D x 42" H), 250 lb net weight unit at wind pressures of 120 psf lateral and 95 psf uplift, on a 24" wide roof stand, shall have the following unit reactions:

Long Side (Width x Height):

1. Sliding Force, L = P_lat x W x H
   = (120 psf) x (48 in) x (42 in) x (1 in^2 / 144 ft^2) = **1680 lb**
2. Uplift Force, U = P_up x W x D
   = (95 psf) x (48 in) x (36 in) x (1 in^2 / 144 ft^2) **= 1140 lb**
3. Total Tension per Long Side =
   = (L x H/2 + U x sd/2 – Wt x 0.6 x sd/2) / sd
   = ((1680 lb x 42/2 in) + (1140 lb x 24/2 in) – (250 lb x 0.6 x 24/2 in)) / 24 in **= 1965 lb**

Short Side (Depth x Height):

1. Sliding Force, L = P_lat x D x H
   = (120 psf) x (36 in) x (42 in) x (1 in^2 / 144 ft^2) **= 1260 lb**
2. Uplift Force, U = P_up x W x D
   = (95 psf) x (48 in) x (36 in) x (1 in^2 / 144 ft^2) **= 1140 lb**
3. Total Tension per Short Side =
   = (L x H/2 + U x sw/2 – Wt x 0.6 x sw/2) / sw
   = ((1260 lb x 42/2 in) + (1140 lb x 48/2 in) – (250 lb x 0.6 x 48/2 in)) / 48 in **= 1046 lb**

IN ALL CONDITIONS IT IS THE RESPONSIBILITY OF THE PERMIT HOLDER TO ENSURE THE HOST STRUCTURE IS CAPABLE OF WITHSTANDING THE RATED GRAVITY, LATERAL, AND UPLIFT FORCES BY SITE-SPECIFIC DESIGN. NO WARRANTY OF ANY KIND, EXPRESSED OR IMPLIED, IS OFFERED BY ENGINEERING EXPRESS AS TO THE INTEGRITY OF THE HOST STRUCTURE TO CARRY DESIGN FORCE LOADS INCURRED BY THIS UNIT.