HA4, HA6, HA8, HA10, MTS, HTS & QGC

PRODUCT FEATURES:
Hurricane Anchors (HA4, HA6, HA8 & HA10) add increased resistance to wind uplift. HA's reduces toe-nailing, utilizing correctly located nail holes for fast, easy and strong attachment of rafters and trusses to plates and studs.

The Medium Twist Straps (MTS) and Heavy Twist Straps (HTS) are used to resist wind uplift and manufactured in lengths 16", 20", 24" and 28". The straps have an offset shape to allow for twisting and bending. Each strap is 1-1/4" wide with nail holes (staggered across the width) punched at 1" along its length.

The QuickTie Girder Connectors (QGC) are used for girder truss connections where uplift load requirements are high.

MATERIAL:
HA4, HA6, HA8 & HA10 - 18 Gauge
MTS - 16 Gauge
HTS - 14 Gauge
QGC - 12 Gauge

COATING: Galvanized (Zinc), G185

INSTALLATION:
• Use all specified fasteners in schedule to achieve the tabulated values

CODE COMPLIANCE: TER 0910-01; FL 3557

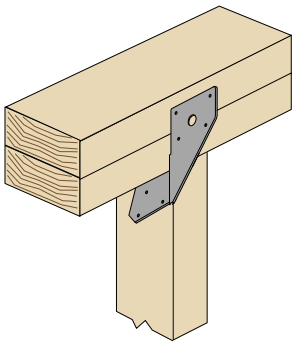

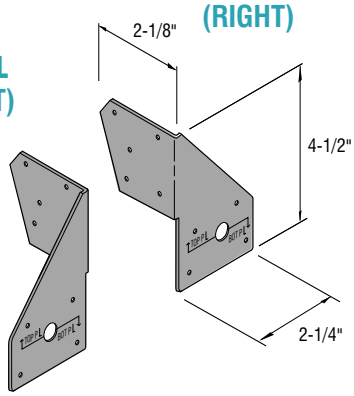

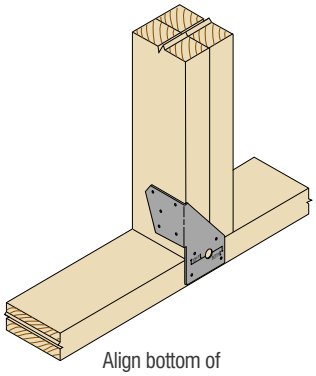

Align bottom of connector to bottom of wood plate.

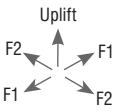

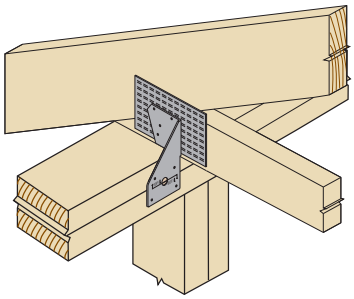

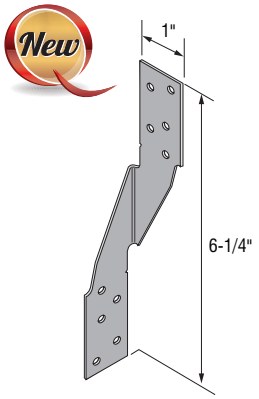

HA6

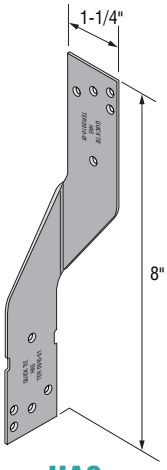

HA8

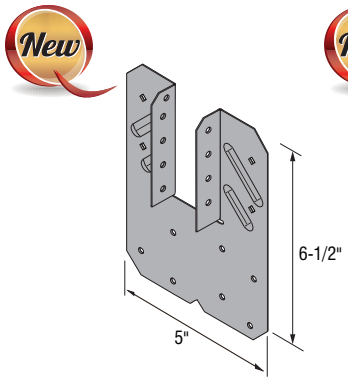

HA10

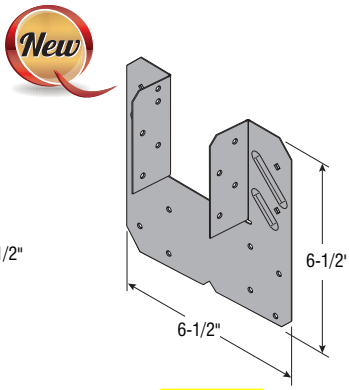

HA10-2

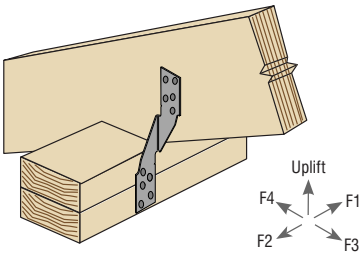

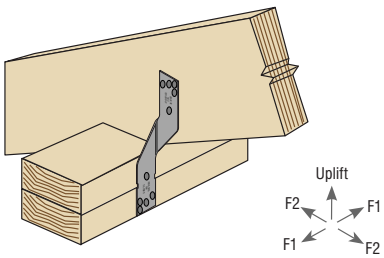

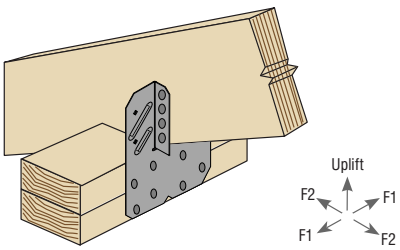

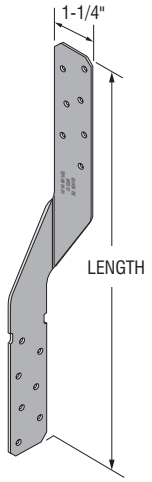

MTS & HTS

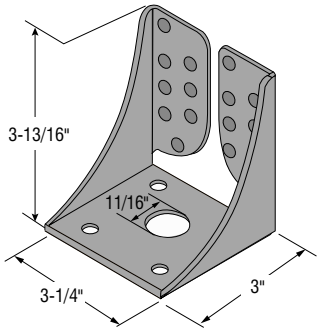

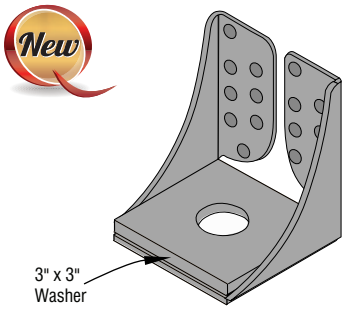

QGC

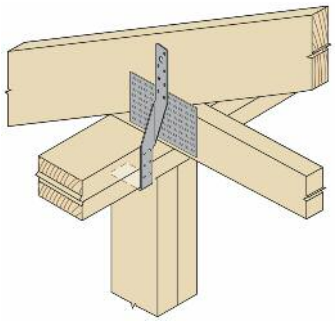

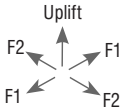

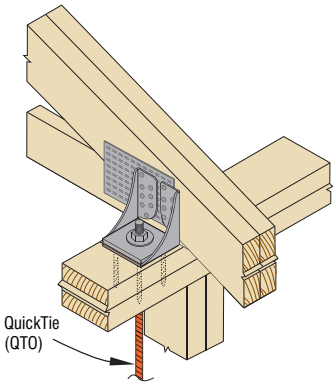

ALLOWABLE LOADS FOR HA4, HA6, HA8, HA10 & QGC[1,2] AND MTS & HTS (LB)[5,6,7]

	Products	Fasteners			Southern Pine (SG = 0.55)						Douglas Fir-Larch (SG = 0.50)						Spruce-Pine-Fir (SG = 0.42)					
		Type	Rafter/Truss[3]	Plates[4]	Uplift		F1	F2	F3	F4	Uplift		F1	F2	F3	F4	Uplift		F1	F2	F3	F4
					1.0	1.6	1.6	1.6	1.6	1.6	1.0	1.6	1.6	1.6	1.6	1.6	1.0	1.6	1.6	1.6	1.6	1.6
HA	HA4	8d x 1-1/2 (0.131 x 1.5")	5	4	-	662	180	120	-	-	-	599	158	120	-	-	-	514	135	106	-	-
		10d x 1-1/2 (0.148 x 1.5")																				
	HA6*	8d x 1-1/2 (0.131 x 1.5")	5	5	520	650	145	140	70	90	480	600	125	125	60	80	415	515	80	100	45	65
	HA8	8d x 1-1/2 (0.131 x 1.5")	5	5	-	600	61	-	-	-	-	600	61	-	-	-	-	485	61	-	-	-
		10d x 1-1/2 (0.148 x 1.5")	5	5	-	815	94	-	-	-	-	705	69	-	-	-	-	540	69	-	-	-
	HA10* HA10R* HA10-2*	10d x 1-1/2 (0.148 x 1.5")	9	8	670	1070	820	430	-	-	670	1070	820	430	-	-	585	935	655	345	-	-
GC	QGC*	1/4" wood screw (included)	16	4	4455	4455	1080	1080	-	-	4455	4455	940	960	-	-	4455	4455	600	800	-	-
	Products	Type	Min. nails required per strip	Min. nails at each end	Uplift		F1	F2	F3	F4	Uplift		F1	F2	F3	F4	Uplift		F1	F2	F3	F4
					1.0	1.6	1.6	1.6	1.6	1.6	1.0	1.6	1.6	1.6	1.6	1.6	1.0	1.6	1.6	1.6	1.6	1.6
MTS	MTS12 MTS16 MTS20 MTS24	10d x 1-1/2 (0.148 x 1.5")	14	7	895	1095	-	-	-	-	830	1015	-	-	-	-	715	875	-	-	-	-
		10d x 3 (0.148 x 3")			895	1095	-	-	-	-	830	1015	-	-	-	-	715	875	-	-	-	-
HTS	HTS16 HTS20 HTS24 HTS28	10d x 1-1/2 (0.148 x 1.5")	22	11	1257	1257	-	-	-	-	1340	1540	-	-	-	-	1160	1330	-	-	-	-
		10d x 3 (0.148 x 3")			1262	1262	-	-	-	-	1340	1540	-	-	-	-	1160	1330	-	-	-	-

*Call Quick Tie for code approval information.

NOTES:

1. Clips may be installed on both sides of the framing member for twice the load.
2. The tabulated loads are valid for clips installed on the inside or the outside of the wall. However, to maintain a continuous load path for uplift, connections in close proximity to one another, such as truss-to-plate and plate-to-stud, clips should be installed on the same side of the wall.
3. Nails attaching clip to rafter or truss:
   HA4, HA6 & HA8 = 8d x 1-1/2" (0.131 x 1.5") or 10d x 1-1/2" (0.148 x 1.5"); HA10 = 10d x 1-1/2" (0.148 x 1.5"); QGC = 1/4" x 3" Wood screw (Refer to page 24).
4. Nails attaching clip to wall plates:
   HA4 & HA8 = 8d (0.131 x 2.5") or 10d (0.148 x 3"); HA6 = 8d x 1-1/2" (0.131 x 1.5"); HA10 = 10d x 1-1/2" (0.148 x 1.5"); QGC = 1/4" x 2-7/8" FMFL (Refer to page 34).
5. Straps do not have to be wrapped over the truss or rafter to achieve the loads shown.
6. Straps may be installed on either side of the framing member.
7. The number of fasteners shown in the table is the minimum required to achieve the loads shown.