MIAMI-DADE COUNTY
DEPARTMENT OF REGULATORY AND ECONOMIC RESOURCES (RER)
BOARD AND CODE ADMINISTRATION DIVISION

MIAMI–DADE COUNTY
PRODUCT CONTROL SECTION
11805 SW 26 Street, Room 208
T (786) 315–2590 F (786) 315–2599
www.miamidade.gov/economy

NOTICE OF ACCEPTANCE (NOA)

WinDoor, Incorporated
104 Triple Diamond Blvd.,
North Venice, Fl. 34275

SCOPE:

This NOA is being issued under the applicable rules and regulations governing the use of construction materials. The documentation submitted has been reviewed and accepted by Miami–Dade County RER–Product Control Section to be used in Miami–Dade County and other areas where allowed by the Authority Having Jurisdiction (AHJ).

This NOA shall not be valid after the expiration date stated below. The Miami–Dade County Product Control Section (In Miami–Dade County) and/ or the AHJ (in areas other than Miami–Dade County) reserve the right to have this product or material tested for quality assurance purposes. If this product or material fails to perform in the accepted manner, the manufacturer will incur the expense of such testing and the AHJ may immediately revoke, modify, or suspend the use of such product or material within their jurisdiction. RER reserves the right to revoke this acceptance, if it is determined by Miami–Dade County Product Control Section that this product or material fails to meet the requirements of the applicable building code.

This product is approved as described herein and has been designed to comply with the Florida Building Code, including the High Velocity Hurricane Zone.

DESCRIPTION: Series "8100" Aluminum Sliding Glass Door w/wo 90^0 & 135^0 corner & w/wo Reinforcements

APPROVAL DOCUMENT: Drawing No. **8100-Corner-NOA** (former **08-01172),** titled "8100 Series Aluminum Sliding Glass Door- LM", sheets 1 through 36 of 36, prepared by manufacturer, dated 07/03/20, signed and sealed by Lynn A. Miller, P.E., bearing the Miami-Dade County Product Control Revision stamp with the Notice of Acceptance number and expiration date by the Miami-Dade County Product Control Section.

MISSILE IMPACT RATING: Large and Small Missile Impact Resistant

1. See Design Pressures (DP) rating Vs sizes, reinforcements, corner and sill riser in elevation, sheets **1** through **13**. For **90^0** corners, see sheets **2 thru 7** for DP Vs sizes tables, sill riser, reinforcement and glass and sheet **8** thru **13** for **135^0** corner units.
2. See anchors requirement in sheets **18** thru **20**.
3. Door Panels with 90^0 & 135^0 not to exceed 60" wide X 120" high or 48" wide X 144" high with or without pockets (Refer to respective elevation and DP Charts).

RENEWAL of this NOA shall be considered after a renewal application has been filed and there has been no change in the applicable building code negatively affecting the performance of this product.

TERMINATION of this NOA will occur after the expiration date or if there has been a revision or change in the materials, use, and/ or manufacture of the product or process. Misuse of this NOA as an endorsement of any product, for sales, advertising or any other purposes shall automatically terminate this NOA. Failure to comply with any section of this NOA shall be cause for termination and removal of NOA.

ADVERTISEMENT: The NOA number preceded by the words Miami–Dade County, Florida, and followed by the expiration date may be displayed in advertising literature. If any portion of the NOA is displayed, then it shall be done in its entirety.

INSPECTION: A copy of this entire NOA shall be provided to the user by the manufacturer or its distributors and shall be available for inspection at the job site at the request of the Building Official.

This NOA **revises & renews NOA No. 17-0822.02** and consists of this page 1, and evidence pages E–1, E-2 and E–3, as well as approval document mentioned above.

The submitted documentation was reviewed by **Ishaq I. Chanda, P. E.**

MIAMI-DADE COUNTY APPROVED

Ishaq I. Chanda

WinDoor, Incorporated

NOTICE OF ACCEPTANCE: EVIDENCE SUBMITTED

1. EVIDENCE SUBMITTED UNDER PREVIOUS NOA's

A. DRAWINGS

1. Manufacturer's die drawings and sections.
(Submitted under NOA No. 11-0208.01)

2. Drawing No. **08-01172, Rev B** titled "8100 Series Alum 90^0 & 135^0 Corner SGD", sheets 1 through 13A, 13B, 13C, 13D, and 13E through 30 of 30, prepared by manufacturer, dated 01/20/11 and last revised on 06/15/15, signed and sealed by Luis R. Lomas, P.E., on 04/07/16.

B. TESTS

1. Test reports on:
1) Air Infiltration Test, per FBC, TAS 202–94
2) Uniform Static Air Pressure Test, Loading per FBC TAS 202–94
3) Water Resistance Test, per FBC, TAS 202–94
4) Small Missile Impact Test per FBC, TAS 201–94
5) Cyclic Wind Pressure Loading per FBC, TAS 203–94
6) Forced Entry Test, per TAS 202–94

along with marked–up drawings and installation diagram of Aluminum Sliding Glass, prepared by National Certified Testing Laboratories, Inc., Test Report No. **NTCL-210-3643-1** and **NTCL-210-3643-2**, both dated 01/14/11, and **revised** and **reissued** on 07/05/11, both signed and sealed by Gerald J. Ferrera, P.E.
(Note: These test reports have addendum letters dated 06/01/2011, issued by National Certified Testing Laboratories Inc., signed & sealed by Gerald J., Ferrara, P.E.)
(Submitted under NOA No. 11-0208.01)

C. CALCULATIONS

1. Anchor verification calculations and structural analysis, conformance to, complying with **FBC 5th Edition (2014)**, prepared, signed, and sealed by Luis R. Lomas, P.E., dated 07/06/15, 03/09/16 and last revised on 04/26/16.

2. Glazing complies with **ASTM E1300–04/09**

D. QUALITY ASSURANCE

1. Miami–Dade Department of Regulatory and Economic Resources (RER).

E. MATERIAL CERTIFICATIONS

1. Notice of Acceptance No. **14-0916.11** issued to **Kuraray America, Inc.** for their "**Sentry Glass® (Clear and White) Interlayer**" dated 06/25/15, expiring on 07/04/18.

2. Notice of Acceptance No. **14-0423.15** issued to **Eastman Chemical Company (MA).** for their **"Saflex CP-Saflex and Saflex HP Composite Glass Interlayers with PET Core**" (formerly Vanceva), dated 06/13/14, expiring on 11/11/18**.**

Ishaq I. Chanda

Ishaq I. Chanda, P. E.
Product Control Unit Supervisor
NOA No. 20-0814.05
Expiration Date: November 03, 2026
Approval Date: December 03, 2020

F. STATEMENTS

1. Statement letter of conformance to, complying with **FBC 5th Edition (2014)**, and of no financial interest, dated 06/08/15, signed and sealed by Luis R. Lomas, P. E.
2. Test lab statement, part of the above referenced test reports.
3. Statement addendum letters dated 06/01/11, issued by National Certified Testing Laboratories, Inc. signed and sealed by Gerald J. Ferrera, P.E.

G. OTHERS

1. Notice of Acceptance No. **12-0130.12**, issued to WinDoor, Inc., for their **Series "8100" Aluminum Sliding Glass Door w/wo 90^0 & 135^0 corner & w/wo Reinforcements**, approved on 04/19/12 and expiring on 11/03/16.

2. EVIDENCE SUBMITTED under previous approval

A. DRAWINGS

1. Drawing No. **08-01172,** titled "8100 Series Aluminum 90^0 & 135^0 Corner SGD 4'0 x 12'0 and 5'0 x 10'0 Panels - LMI", sheets 1 through 36 of 36, prepared by manufacturer, dated 01/20/11, with revision **C**, dated 07/20/17, signed and sealed by Luis R. Lomas, P.E.

B. TESTS

1. None.

C. CALCULATIONS

1. Anchor verification calculations and structural analysis, conformance to, complying with **FBC 5th Edition (2014)** and **FBC 6th Edition (2017)**, prepared, signed, and sealed by Luis R. Lomas, P.E., dated 07/26/17.
2. Glazing complies with **ASTM E1300–04/09**

D. QUALITY ASSURANCE

1. Miami–Dade Department of Regulatory and Economic Resources (RER).

E. MATERIAL CERTIFICATIONS

1. Notice of Acceptance No. **14-0916.11** issued to **Kuraray America, Inc.** for their "**SentryGlas® (Clear and White) Interlayer**" dated 06/25/15, expiring on 07/04/18.
2. Notice of Acceptance No. **17-0712.03** issued to **Eastman Chemical Company (MA).** for their **"Saflex CP-Saflex and Saflex HP Composite Glass Interlayers with PET Core**", dated 09/07/17, expiring on 12/11/18.

F. STATEMENTS

1. Statement letter of conformance to **FBC 5th Edition (2014)** and **FBC 6th Edition (2017)**, and of no financial interest, dated 10/10/17, signed and sealed by Luis R. Lomas, P. E.

G. OTHERS

1. This NOA revises NOA #15-0715.05, expiring on 11/03/21.

Ishaq I. Chanda

Ishaq I. Chanda, P. E.
Product Control Unit Supervisor
NOA No. 20-0814.05
Expiration Date: November 03, 2026
Approval Date: December 03, 2020

NOTICE OF ACCEPTANCE: EVIDENCE SUBMITTED

3. NEW EVIDENCE SUBMITTED

A. DRAWINGS

1. Drawing No. **8100-Corner-NOA** (former **08-01172),** titled "8100 Series Aluminum Sliding Glass Door- LM", sheets 1 through 36 of 36, prepared by manufacturer, dated 07/03/20, signed and sealed by Lynn A. Miller, P.E.

B. TESTS

1. Test reports on: 1) Air Infiltration Test, per FBC, TAS 202-94
2) Uniform Static Air Pressure Test, Loading per FBC, TAS 202-94
3) Water Resistance Test, per FBC, TAS 202-94
4) Large Missile Impact Test per FBC, TAS 201-94
5) Cyclic Wind Pressure Loading per FBC, TAS 203-94
6) Forced Entry Test, per ASTM F588 and TAS 202-94

along with marked-up drawings and installation diagram of all Windoor Inc., CGI Windows and Doors, Inc. and PGT Industries, Inc., representative units listed below and tested to qualify **Dowsil 791** and **Dowsil 983** silicones, per Proposal #**19-1155TP**, prepared by Fenestration Testing Laboratory, Inc., Test Reports No.:

WinDoor, Inc. test specimens:

FTL-20-2078.1, WinDoor PW3000 Aluminum Fixed Lite (unit 11 in proposal)
FTL-20-2078.2, WinDoor HR9470 Thermally Broken Alum. Horiz. Roller (unit 12)
FTL-20-2078.3, WinDoor SGD8100 Alum. Sliding Glass Door (unit 13 in proposal)
FTL-20-2078.4, WinDoor HR9470 Thermally Broken Alum. Horiz. Roller (unit 14)
FTL-20-2078.5, WinDoor PW9020 Alum. Fixed Lite (unit 15 in proposal) and
FTL-20-2078.6, WinDoor PW9020 Alum. Fixed Lite (unit 16 in proposal), all dated 09/24/20 and signed and sealed by Idalmis Ortega, P.E.

CGI Windows and Doors Inc. test specimens:

FTL-20-2108.1, CGI SH360 Aluminum Single Hung Window (unit 1 in proposal) **FTL-20-2108.2,** CGI CA238 Alum. Outswing Casement Window (unit 2 in proposal) **FTL-20-2108.3,** CGI SGD560 Aluminum Sliding Glass Door (unit 3 in proposal) **FTL-20-2108.4**, CGI PW410 Aluminum Fixed Window (unit 4 in proposal) and **FTL-20-2108.5**, CGI SH360 Aluminum Single Hung Window (unit 5 in proposal)all dated 08/24/20 and signed and sealed by Idalmis Ortega, P.E.

B. TESTS (continue):

PGT Industries, Inc. test specimens:

FTL-7897, PGT PW5520 PVC Fixed Window (unit 6 in proposal), dated 09/03/14
FTL-20-2107.1, PGT SGD780 Aluminum Sliding Glass Door (unit 7 in proposal) **FTL-20-2107.2,** PGT CA740 Alum. Outswing Casement Window (unit 8 in proposal) **FTL-20-2107.3,** PGT PW7620A Aluminum Fixed Window (unit 9 in proposal) and **FTL-20-2107.4**, PGT PW7620A Aluminum Fixed Window (unit 10 in proposal) all dated 07/13/20 and signed and sealed by Idalmis Ortega, P.E.

Ishaq I. Chanda

Ishaq I. Chanda, P. E.
Product Control Unit Supervisor
NOA No. 20-0814.05
Expiration Date: November 03, 2026
Approval Date: December 03, 2020

NOTICE OF ACCEPTANCE: EVIDENCE SUBMITTED

C. CALCULATIONS

1. Anchor verification calculations and structural analysis, complying with **FBC 7th Edition (2020)**, dated 07/03/20, prepared by manufacturer, signed and sealed by Anthony Lynn Miller, P.E.
2. Glazing complies with **ASTM E1300-04, -09, -12 and -16.**

D. QUALITY ASSURANCE

1. Miami Dade Department of Regulatory and Economic Resources (RER).

E. MATERIAL CERTIFICATIONS

1. Notice of Acceptance No. **17-0808.02** issued to **Kuraray America, Inc.** for their **"SentryGlas® (Clear and White) Glass Interlayers**", expiring on 07/04/23.
2. Notice of Acceptance No. **20-0622.02** issued to **Eastman Chemical Company (MA)** for **"Saflex CP – Saflex and Saflex HP Composite Glass Interlayer w/ PET core" (formerly Vanceva)**, expiring on 12/11/2023.

F. STATEMENTS

1. Statement letters of conformance to FBC 2020(**7th** Edition) and "No financial interest", dated 07/03/20, prepared, signed & sealed by Lynn Miller, P. E.
2. Statement of Lab compliance as part of the test report.
3. Notification of Successor Engineer per the Florida Administrative Code Section 61G15-27.001, notifying original engineer that the successor engineer is assuming full professional and legal responsibility for all engineering documents pertaining to this NOA, dated 07/29/20, signed and sealed by A. Lynn Miller, P.E.

G. OTHER

1. This NOA **revises & renews NOA No. 17-0822.02** and updates to FBC 2020 (7th Edition) expiring 11/03/26.
2. RER Test proposals #**19-1155** dated 01/10/20 approved by Ishaq I. Chanda, P.E.

Ishaq I. Chanda

Ishaq I. Chanda, P. E.
Product Control Unit Supervisor
NOA No. 20-0814.05
Expiration Date: November 03, 2026
Approval Date: December 03, 2020

NOTES:

1. THE PRODUCT SHOWN HEREIN IS DESIGNED AND MANUFACTURED TO COMPLY WITH REQUIREMENTS OF THE FLORIDA BUILDING CODE 6TH EDITION (2017) AND 7TH EDITION (2020), INCLUDING THE HVHZ.
2. WOOD FRAMING, 20GA. 2X WOOD BACKED STEEL STUD OR MASONRY/CONCRETE OPENING TO BE DESIGNED AND ANCHORED TO PROPERLY TRANSFER ALL LOADS TO STRUCTURE. WOOD FRAMING, 20GA. 2X WOOD BACKED STEEL STUD OR MASONRY/CONCRETE OPENING IS THE RESPONSIBILITY OF THE ARCHITECT OR ENGINEER OF RECORD.
3. 1X BUCK OVER MASONRY/CONCRETE IS OPTIONAL. WHERE 1X BUCK IS NOT USED DISSIMILAR MATERIALS MUST BE SEPARATED WITH APPROVED COATING OR MEMBRANE. SELECTION OF COATING OR MEMBRANE IS THE RESPONSIBILITY OF THE ARCHITECT OR ENGINEER OF RECORD. 1X BUCK MUST BE PROPERLY SECURED TO TRANSFER ALL LOADS TO THE STRUCTURE, TO BE REVIEWED BY THE AHJ.
4. ALLOWABLE STRESS INCREASE OF 1/3 WAS NOT USED IN THE DESIGN OF THE PRODUCT SHOWN HEREIN. WIND LOAD DURATION FACTOR Cd=1.6 WAS USED FOR WOOD ANCHOR CALCULATIONS.
5. FRAME MATERIAL: EXTRUDED ALUMINUM 6063–T6 .075" THICK.
   PANEL MATERIAL: EXTRUDED ALUMINUM 6063–T6 .080" THICK.
6. UNITS MUST BE GLAZED PER ASTM E1300–04/–09 WITH LARGE MISSILE IMPACT GLASS. SEE SHEET 22 FOR GLAZING DETAILS.
7. APPROVED IMPACT PROTECTIVE SYSTEM <u>IS NOT REQUIRED</u> FOR THIS PRODUCT IN WIND BORNE DEBRIS REGIONS.
8. MAXIMUM 4'0 x 12'0 PANEL SIZE: 51 3/4" x 142 1/16"
   MAXIMUM 5'0 x 10'0 PANEL SIZE: 63 3/4" x 118 1/16"
9. MAXIMUM D.L.O. SIZE 4'0 x 12'0 PANEL: 40 1/4" x 132 5/8" (STD. BOTTOM RAIL) OR 129 3/32" (TALL BOTTOM RAIL).
10. MAXIMUM D.L.O. SIZE 5'0 x 10'0 PANEL: 52 1/4" x 109 3/16" (STD. BOTTOM RAIL) OR 105 3/32" (TALL BOTTOM RAIL).

TABLE OF CONTENTS

SHEET NO.	DESCRIPTION
1	GENERAL NOTES
2-13	ELEVATIONS
14-18	DP CHARTS
19-21	ANCHOR LAYOUT & NOTES
22-27	BOM, GLAZING DETAILS & SECTION VIEWS
28-31	INSTALLATION DETAILS
32	LOCKING HARDWARE LAYOUT
33-36	EXTRUSIONS

PRODUCT REVISED
as complying with the Florida Building Code
NOA-No. 20-0814.05
Expiration Date 11/03/2026
By Ishaq I. Chanda
Miami-Dade Product Control

Revision: UPDATES FOR 2020 FBC. UPDATED MANUFACTURING ADDRESS.

PREPARED BY A. LYNN MILLER
1070 TECHNOLOGY DRIVE
N. VENICE, FL 34275
(941) 480-1600
REGISTRATION #29296

Date: 07/28/20

WINDOOR® INCORPORATED

WINDOOR INCORPORATED
104 TRIPLE DIAMOND BLVD.
NORTH VENICE, FL 34275
(833) 554-5432

Title: ALUMINUM SLIDING GLASS DOOR (LM)
Drawn By: ERIN KOSS
Desc.: GENERAL NOTES
Rev.:
DWG No.: 8100CORNER-NOA
Sheet: 1 OF 36
Series: SGD8100A

ANTHONY LYNN MILLER
LICENSE
No. 58705
STATE OF FLORIDA
PROFESSIONAL ENGINEER
7/3/20

A. LYNN MILLER, P.E.
P.E.# 58705

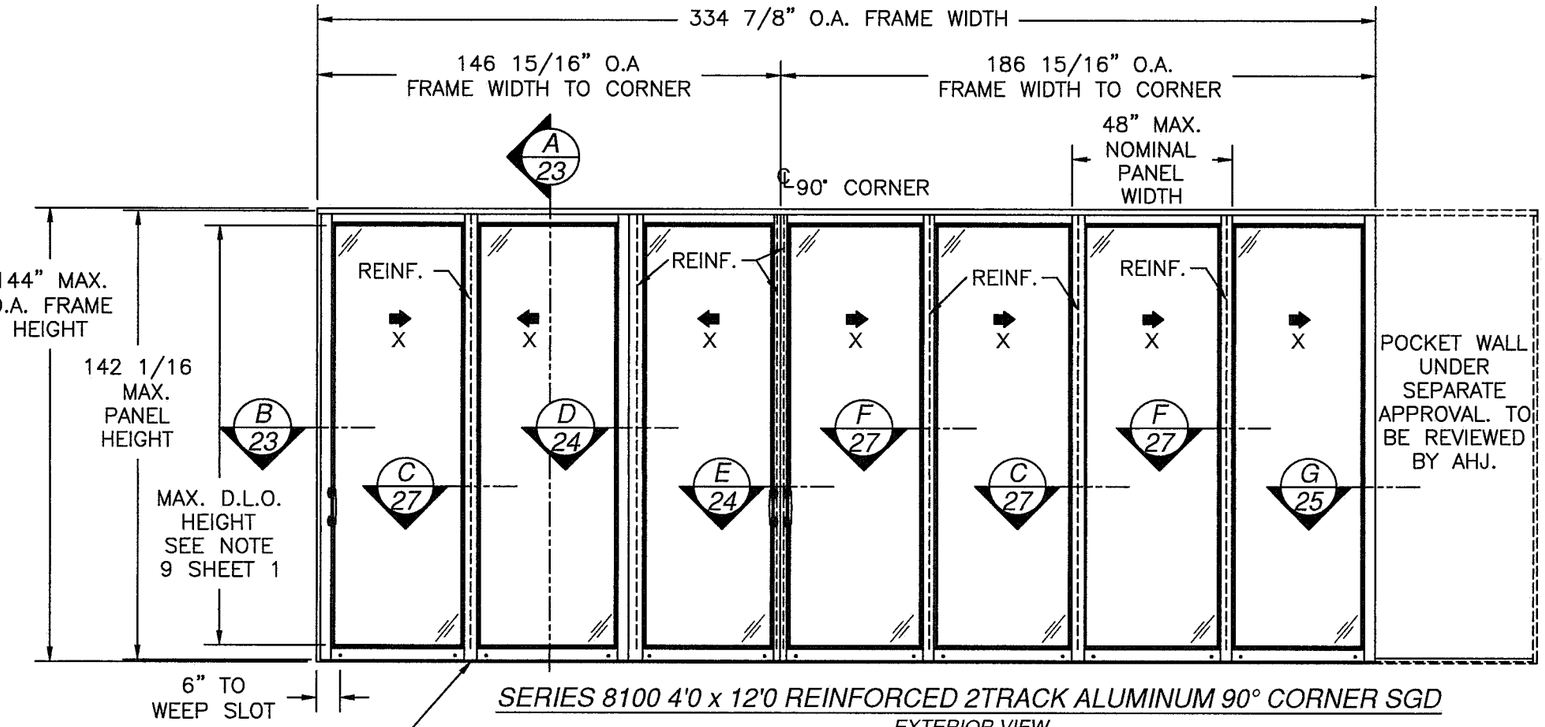

SERIES 8100 4'0 x 12'0 REINFORCED 2TRACK ALUMINUM 90° CORNER SGD

EXTERIOR VIEW

SEVEN PANELS ON 2TRACK FRAME SHOWN, UNLIMITED NUMBER OF PANELS IN UNLIMITED CONFIGURATIONS, BYPASS OR 90° CORNER, ON 2, 3, 4 OR 5 TRACK FRAME, WITH OR WITHOUT POCKETS, ARE APPROVED AS LONG AS INDIVIDUAL PANEL SIZE DOES NOT EXCEED MAXIMUM PANEL SIZE, USES VERTICAL CONDITIONS AS SHOWN AND THE TOTAL FRAME AREA DOES NOT EXCEED 502 SQUARE FEET.

REINFORCED UNIT WITH 3" SILL RISER

DESIGN PRESSURE RATING	IMPACT RATING
±70.0PSF	LARGE MISSILE IMPACT

FOR MASONRY/CONCRETE AND METAL INSTALLATION
FOR ADDITIONAL SIZES, RISERS AND RATINGS, SEE SHEET 14

REINFORCED UNIT WITH 3" SILL RISER

DESIGN PRESSURE RATING	IMPACT RATING
±57.3PSF	LARGE MISSILE IMPACT

FOR WOOD INSTALLATION
FOR ADDITIONAL SIZES, RISERS AND RATINGS, SEE SHEET 16

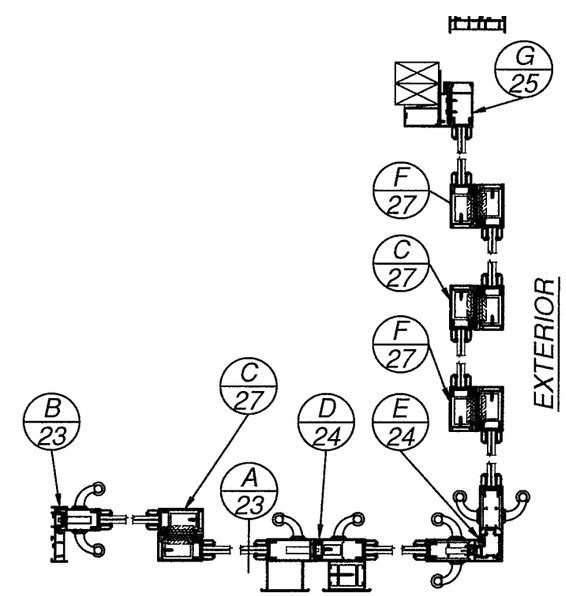

EXTERIOR

SERIES 8100 4'0 x 12'0 ALUMINUM 90° CORNER SGD

REINFORCED 2 TRACK LAYOUT

PANEL HEIGHT AND D.L.O. FORMULA
PANEL HEIGHT = UNIT HEIGHT − 1 9/16"
MAXIMUM D.L.O. HEIGHT = PANEL HEIGHT − 9 1/2"
D.L.O. WIDTH = NOMINAL PANEL WIDTH − 9 1/2"

PRODUCT REVISED
as complying with the Florida Building Code
NOA-No. 20-0814.05
Expiration Date 11/03/2026
By Ishwar I. Chanda
Miami-Dade Product Control

Revision: NO CHANGES THIS SHEET.

PREPARED BY A. LYNN MILLER
1070 TECHNOLOGY DRIVE
N. VENICE, FL 34275
(941) 480-1600
REGISTRATION #29296

Date	Drawn By	DWG No.	Rev.
07/28/20	ERIN KOSS	8100CORNER-NOA	

WINDOOR® INCORPORATED
WINDOOR INCORPORATED
104 TRIPLE DIAMOND BLVD.
NORTH VENICE, FL 34275
(833) 554-5432

Series	Desc.	Sheet
SGD8100A	ELEVATION - 4'x12' REINF. 90 DEG 2T DP AT MAX SIZE	2 OF 36

Title: ALUMINUM SLIDING GLASS DOOR (LM)

ANTHONY LYNN MILLER
LICENSE
No. 58705
STATE OF FLORIDA
PROFESSIONAL ENGINEER
7/31/20

A. LYNN MILLER, P.E.
P.E.# 58705

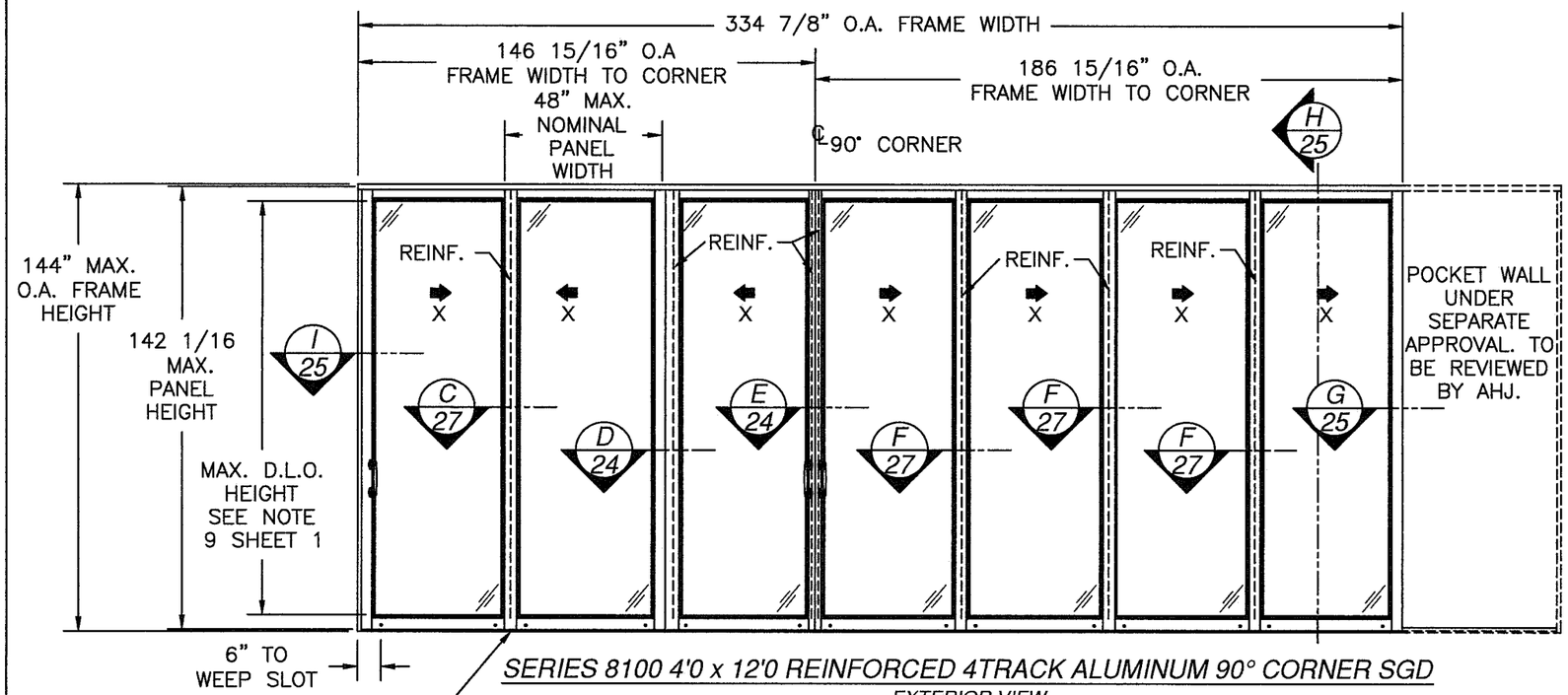

SERIES 8100 4'0 x 12'0 REINFORCED 4TRACK ALUMINUM 90° CORNER SGD

EXTERIOR VIEW

SEVEN PANELS ON 4TRACK FRAME SHOWN, UNLIMITED NUMBER OF PANELS IN UNLIMITED CONFIGURATIONS, BYPASS OR 90° CORNER, ON 2, 3, 4 OR 5 TRACK FRAME, WITH OR WITHOUT POCKETS, ARE APPROVED AS LONG AS INDIVIDUAL PANEL SIZE DOES NOT EXCEED MAXIMUM PANEL SIZE, USES VERTICAL CONDITIONS AS SHOWN AND THE TOTAL FRAME AREA DOES NOT EXCEED 502 SQUARE FEET.

REINFORCED UNIT WITH 3" SILL RISER

DESIGN PRESSURE RATING	IMPACT RATING
±70.0PSF	LARGE MISSILE IMPACT

FOR MASONRY/CONCRETE AND METAL INSTALLATION
FOR ADDITIONAL SIZES, RISERS AND RATINGS, SEE SHEET 14

REINFORCED UNIT WITH 3" SILL RISER

DESIGN PRESSURE RATING	IMPACT RATING
±57.3PSF	LARGE MISSILE IMPACT

FOR WOOD INSTALLATION
FOR ADDITIONAL SIZES, RISERS AND RATINGS, SEE SHEET 16

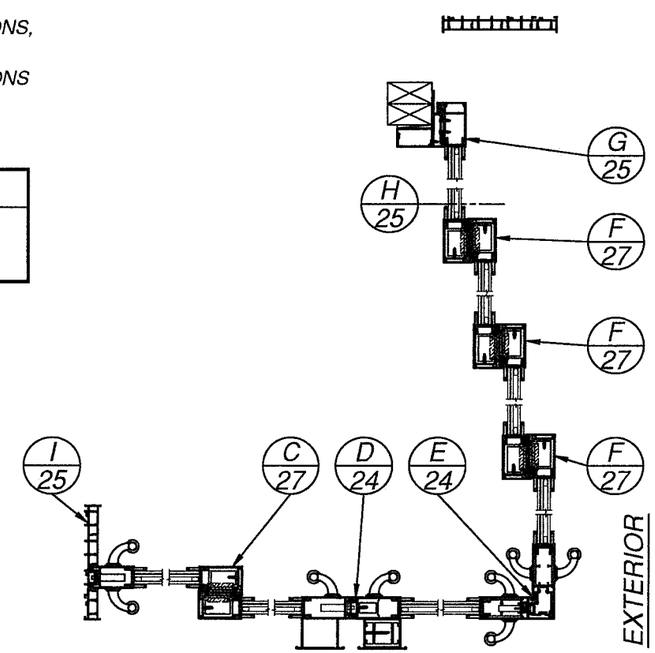

EXTERIOR
SERIES 8100 4'0 x 12'0 ALUMINUM 90° CORNER SGD

REINFORCED 4 TRACK LAYOUT

PANEL HEIGHT AND D.L.O. FORMULA
PANEL HEIGHT = UNIT HEIGHT − 1 9/16"
MAXIMUM D.L.O. HEIGHT = PANEL HEIGHT − 9 1/2"
D.L.O. WIDTH = NOMINAL PANEL WIDTH − 9 1/2"

PRODUCT REVISED
as complying with the Florida Building Code
NOA-No. 20-0814.05
Expiration Date 11/03/2026
By Ishaq I. Chanda
Miami-Dade Product Control

Revision: NO CHANGES THIS SHEET.

PREPARED BY A. LYNN MILLER
1070 TECHNOLOGY DRIVE
N. VENICE, FL 34275
(941) 480-1600
REGISTRATION #29296

WINDOOR® INCORPORATED
WINDOOR INCORPORATED
104 TRIPLE DIAMOND BLVD.
NORTH VENICE, FL 34275
(833) 554-5432

Title	Date	Drawn By	DWG No.	Rev.
ALUMINUM SLIDING GLASS DOOR (LM)	07/28/20	ERIN KOSS	8100CORNER-NOA	

Series Desc.	Sheet
ELEVATION - 4'x12' REINF. 90 DEG 4T DP AT MAX SIZE	3 OF 36
SGD8100A	

ANTHONY LYNN MILLER
LICENSE
No. 58705
STATE OF FLORIDA
PROFESSIONAL ENGINEER
7/31/20

A. LYNN MILLER, P.E.
P.E.# 58705

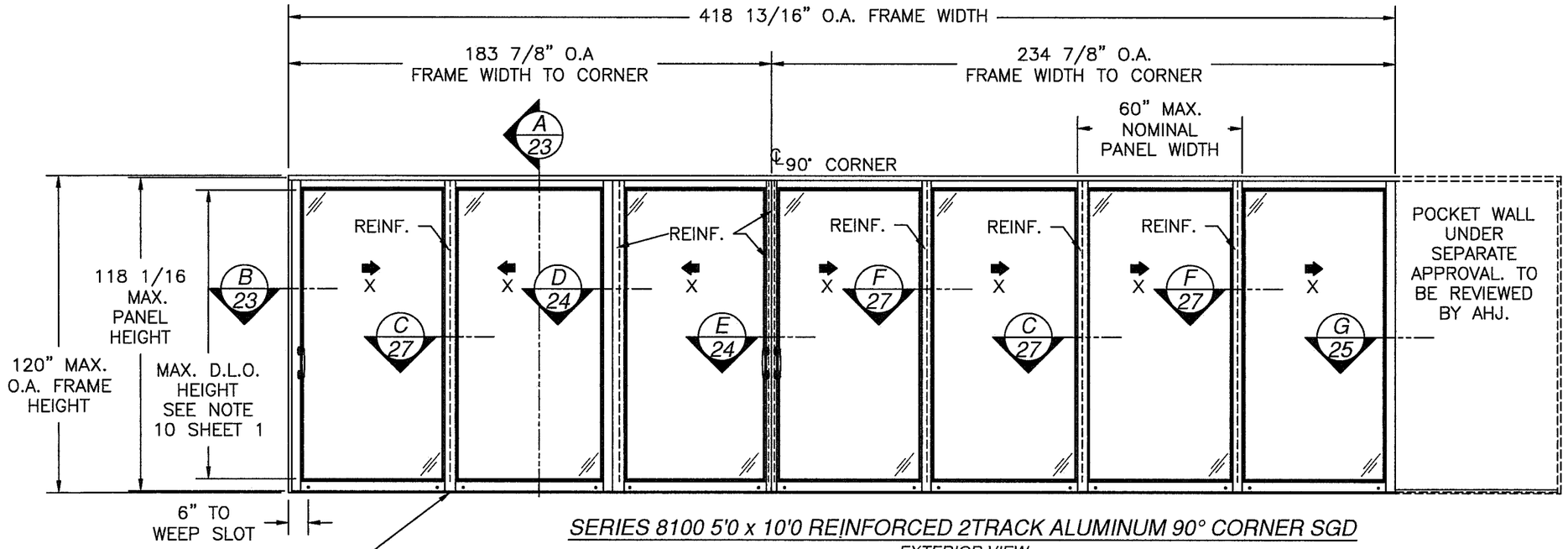

SERIES 8100 5'0 x 10'0 REINFORCED 2TRACK ALUMINUM 90° CORNER SGD

EXTERIOR VIEW

SEVEN PANELS ON 2TRACK FRAME SHOWN, UNLIMITED NUMBER OF PANELS IN UNLIMITED CONFIGURATIONS, BYPASS OR 90° CORNER, ON 2, 3, 4 OR 5 TRACK FRAME, WITH OR WITHOUT POCKETS, ARE APPROVED AS LONG AS INDIVIDUAL PANEL SIZE DOES NOT EXCEED MAXIMUM PANEL SIZE, USES VERTICAL CONDITIONS AS SHOWN AND THE TOTAL FRAME AREA DOES NOT EXCEED 523 SQUARE FEET.

REINFORCED UNIT WITH 3" SILL RISER

DESIGN PRESSURE RATING	IMPACT RATING
±80.0PSF	LARGE MISSILE IMPACT

FOR MASONRY/CONCRETE AND METAL INSTALLATION
FOR ADDITIONAL SIZES, RISERS AND RATINGS, SEE SHEET 14

REINFORCED UNIT WITH 3" SILL RISER

DESIGN PRESSURE RATING	IMPACT RATING
±61.2PSF	LARGE MISSILE IMPACT

FOR WOOD INSTALLATION
FOR ADDITIONAL SIZES, RISERS AND RATINGS, SEE SHEET 16

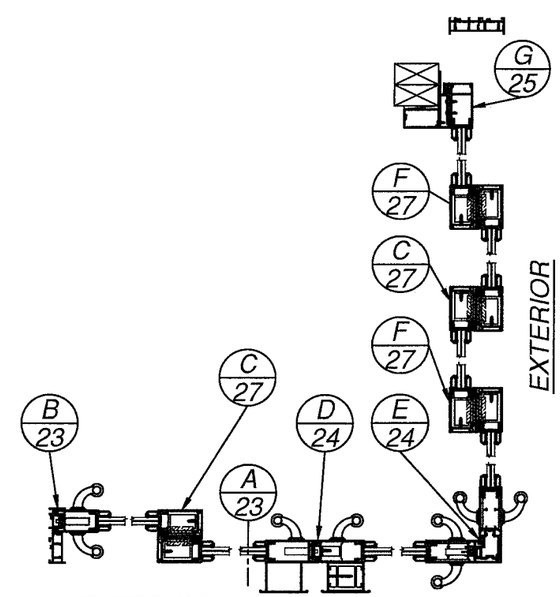

EXTERIOR

SERIES 8100 5'0 x 10'0 ALUMINUM 90° CORNER SGD

REINFORCED 2 TRACK LAYOUT

PANEL HEIGHT AND D.L.O. FORMULA
PANEL HEIGHT = UNIT HEIGHT – 1 9/16"
MAXIMUM D.L.O. HEIGHT = PANEL HEIGHT – 9 1/2"
D.L.O. WIDTH = NOMINAL PANEL WIDTH – 9 1/2"

PRODUCT REVISED
as complying with the Florida Building Code
NOA-No. 20-0814.05
Expiration Date 11/03/2026
By Ishaq I. Chanda
Miami-Dade Product Control

Revision: NO CHANGES THIS SHEET.

PREPARED BY A. LYNN MILLER
1070 TECHNOLOGY DRIVE
N. VENICE, FL 34275
(941) 480-1600
REGISTRATION #29296

WINDOOR® INCORPORATED
WINDOOR INCORPORATED
104 TRIPLE DIAMOND BLVD.
NORTH VENICE, FL 34275
(833) 554-5432

Title	ALUMINUM SLIDING GLASS DOOR (LM)	Date	07/28/20	Rev.
Desc.	ELEVATION - 5'x10' REINF. 90 DEG 2T DP AT MAX SIZE	Drawn By	ERIN KOSS	
Series	SGD8100A	DWG No.	8100CORNER-NOA	
		Sheet	4 OF 36	

ANTHONY LYNN MILLER
LICENSE
No. 58705
STATE OF FLORIDA
PROFESSIONAL ENGINEER
7/31/20

A. LYNN MILLER, P.E.
P.E.# 58705

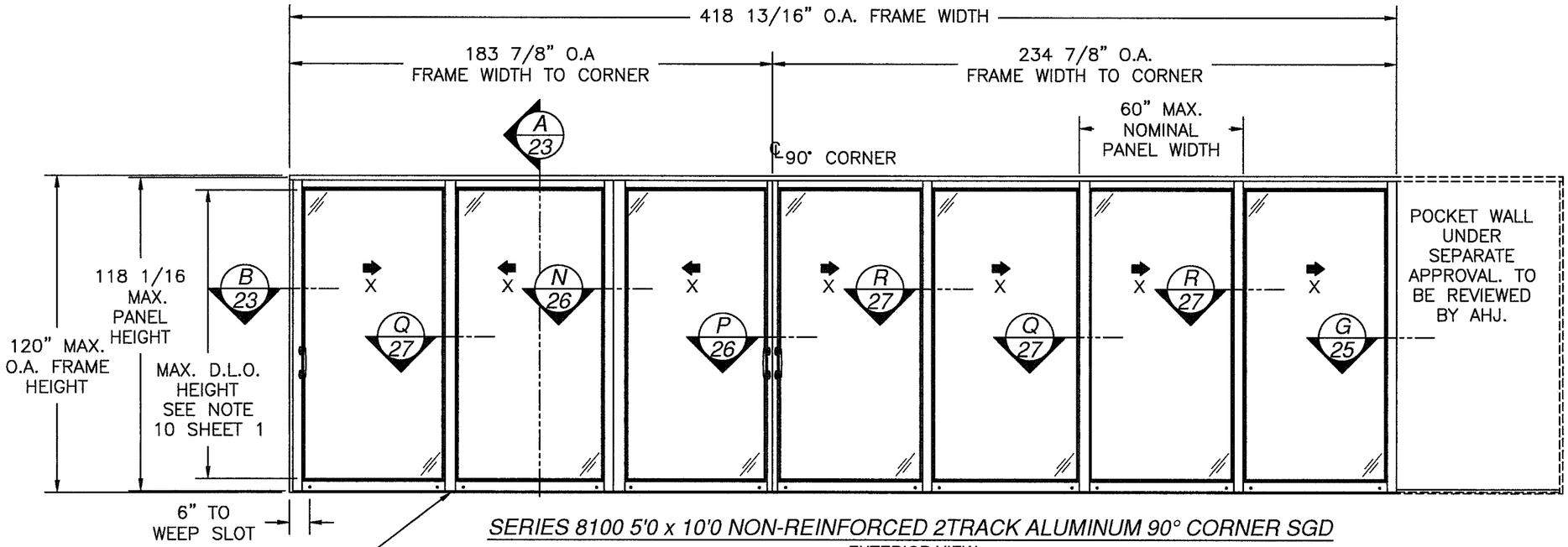

SERIES 8100 5'0 x 10'0 NON-REINFORCED 2TRACK ALUMINUM 90° CORNER SGD

EXTERIOR VIEW

SEVEN PANELS ON 2TRACK FRAME SHOWN, UNLIMITED NUMBER OF PANELS IN UNLIMITED CONFIGURATIONS, BYPASS OR 90° CORNER, ON 2, 3, 4 OR 5 TRACK FRAME, WITH OR WITHOUT POCKETS, ARE APPROVED AS LONG AS INDIVIDUAL PANEL SIZE DOES NOT EXCEED MAXIMUM PANEL SIZE, USES VERTICAL CONDITIONS AS SHOWN AND THE TOTAL FRAME AREA DOES NOT EXCEED 523 SQUARE FEET.

NON-REINFORCED UNIT WITH 2-1/4" SILL RISER

DESIGN PRESSURE RATING	IMPACT RATING
±50.0PSF	LARGE MISSILE IMPACT

FOR WOOD, MASONRY/CONCRETE AND METAL INSTALLATION
FOR ADDITIONAL SIZES, RISERS AND RATINGS,
SEE SHEET 18

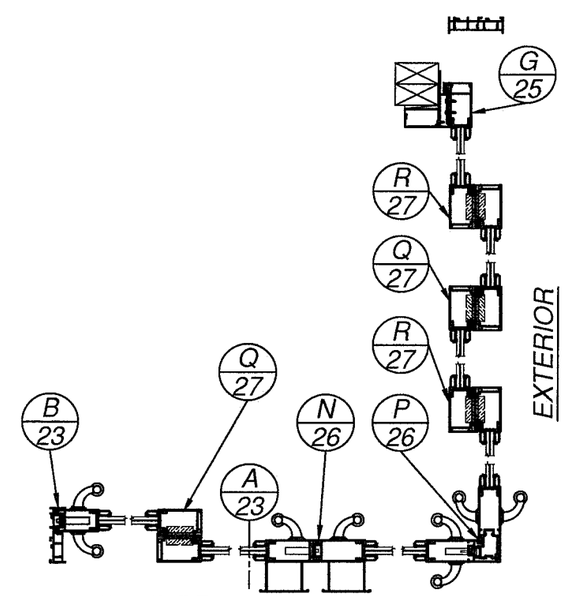

EXTERIOR

SERIES 8100 5'0 x 10'0 ALUMINUM 90° CORNER SGD

NON-REINFORCED 2 TRACK LAYOUT

PANEL HEIGHT AND D.L.O. FORMULA
PANEL HEIGHT = UNIT HEIGHT – 1 9/16"
MAXIMUM D.L.O. HEIGHT = PANEL HEIGHT – 9 1/2"
D.L.O. WIDTH = NOMINAL PANEL WIDTH – 9 1/2"

PRODUCT REVISED
as complying with the Florida Building Code
NOA-No. 20-0814.05
Expiration Date 11/03/2026
By Ishwar I. Chanda
Miami-Dade Product Control

Revision: NO CHANGES THIS SHEET.

PREPARED BY A. LYNN MILLER
1070 TECHNOLOGY DRIVE
N. VENICE, FL 34275
(941) 480-1600
REGISTRATION #29296

WINDOOR® INCORPORATED
WINDOOR INCORPORATED
104 TRIPLE DIAMOND BLVD.
NORTH VENICE, FL 34275
(833) 554-5432

Series	Desc.	Sheet	DWG No.	Drawn By	Date	Rev.
SGD8100A	ELEVATION - 5'x10' 90 DEG 2T DP AT MAX SIZE	5 OF 36	8100CORNER-NOA	ERIN KOSS	07/28/20	

Title: ALUMINUM SLIDING GLASS DOOR (LM)

ANTHONY LYNN MILLER
LICENSE
No. 58705
STATE OF FLORIDA
PROFESSIONAL ENGINEER
7/31/20

A. LYNN MILLER, P.E.
P.E.# 58705

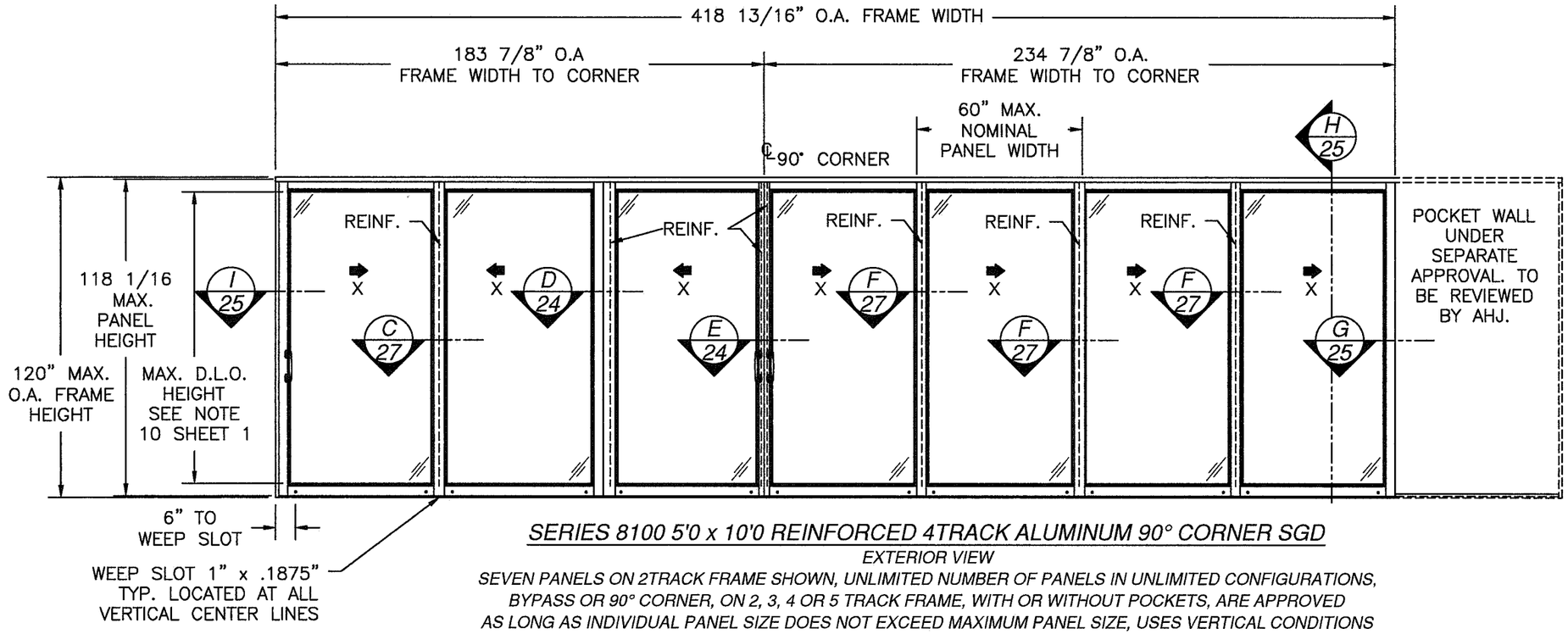

SERIES 8100 5'0 x 10'0 REINFORCED 4TRACK ALUMINUM 90° CORNER SGD

EXTERIOR VIEW

SEVEN PANELS ON 2TRACK FRAME SHOWN, UNLIMITED NUMBER OF PANELS IN UNLIMITED CONFIGURATIONS, BYPASS OR 90° CORNER, ON 2, 3, 4 OR 5 TRACK FRAME, WITH OR WITHOUT POCKETS, ARE APPROVED AS LONG AS INDIVIDUAL PANEL SIZE DOES NOT EXCEED MAXIMUM PANEL SIZE, USES VERTICAL CONDITIONS AS SHOWN AND THE TOTAL FRAME AREA DOES NOT EXCEED 523 SQUARE FEET.

REINFORCED UNIT WITH 3" SILL RISER

DESIGN PRESSURE RATING	IMPACT RATING
±80.0PSF	LARGE MISSILE IMPACT

FOR MASONRY/CONCRETE AND METAL INSTALLATION
FOR ADDITIONAL SIZES, RISERS AND RATINGS, SEE SHEET 14

REINFORCED UNIT WITH 3" SILL RISER

DESIGN PRESSURE RATING	IMPACT RATING
±61.2PSF	LARGE MISSILE IMPACT

FOR WOODL INSTALLATION
FOR ADDITIONAL SIZES, RISERS AND RATINGS, SEE SHEET 16

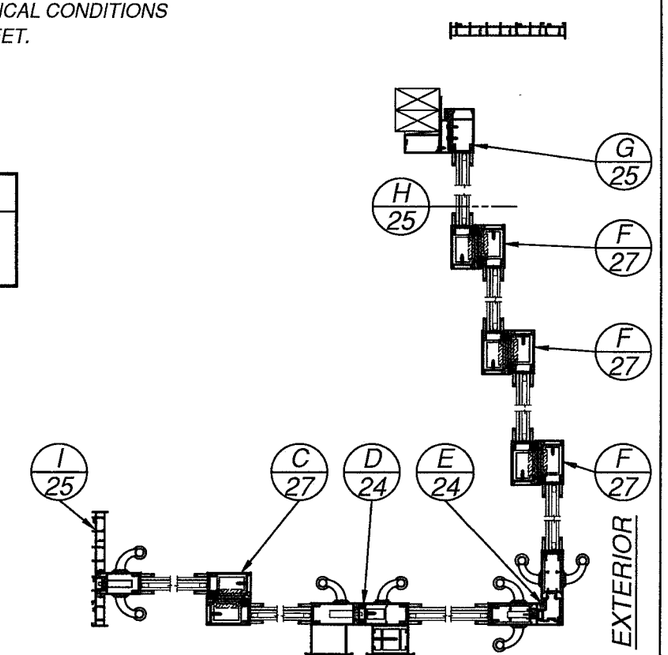

EXTERIOR
SERIES 8100 5'0 x 10'0 ALUMINUM 90° CORNER SGD
REINFORCED 4 TRACK LAYOUT

PANEL HEIGHT AND D.L.O. FORMULA
PANEL HEIGHT = UNIT HEIGHT − 1 9/16"
MAXIMUM D.L.O. HEIGHT = PANEL HEIGHT − 9 1/2"
D.L.O. WIDTH = NOMINAL PANEL WIDTH − 9 1/2"

PRODUCT REVISED
as complying with the Florida Building Code
NOA-No. 20-0814.05
Expiration Date 11/03/2026
By Ishwar I. Chanda
Miami-Dade Product Control

Revision: NO CHANGES THIS SHEET.

PREPARED BY A. LYNN MILLER
1070 TECHNOLOGY DRIVE
N. VENICE, FL 34275
(941) 480-1600
REGISTRATION #29296

WINDOOR® INCORPORATED
WINDOOR INCORPORATED
104 TRIPLE DIAMOND BLVD.
NORTH VENICE, FL 34275
(833) 554-5432

Date	07/28/20
Drawn By	ERIN KOSS
DWG No.	8100CORNER-NOA
Rev.	
Sheet	6 OF 36
Series	SGD8100A
Desc.	ELEVATION - 5'x10' REINF. 90 DEG 4T DP AT MAX SIZE
Title	ALUMINUM SLIDING GLASS DOOR (LM)

ANTHONY LYNN MILLER
LICENSE
No. 58705
STATE OF FLORIDA
PROFESSIONAL ENGINEER
7/31/20

A. LYNN MILLER, P.E.
P.E.# 58705

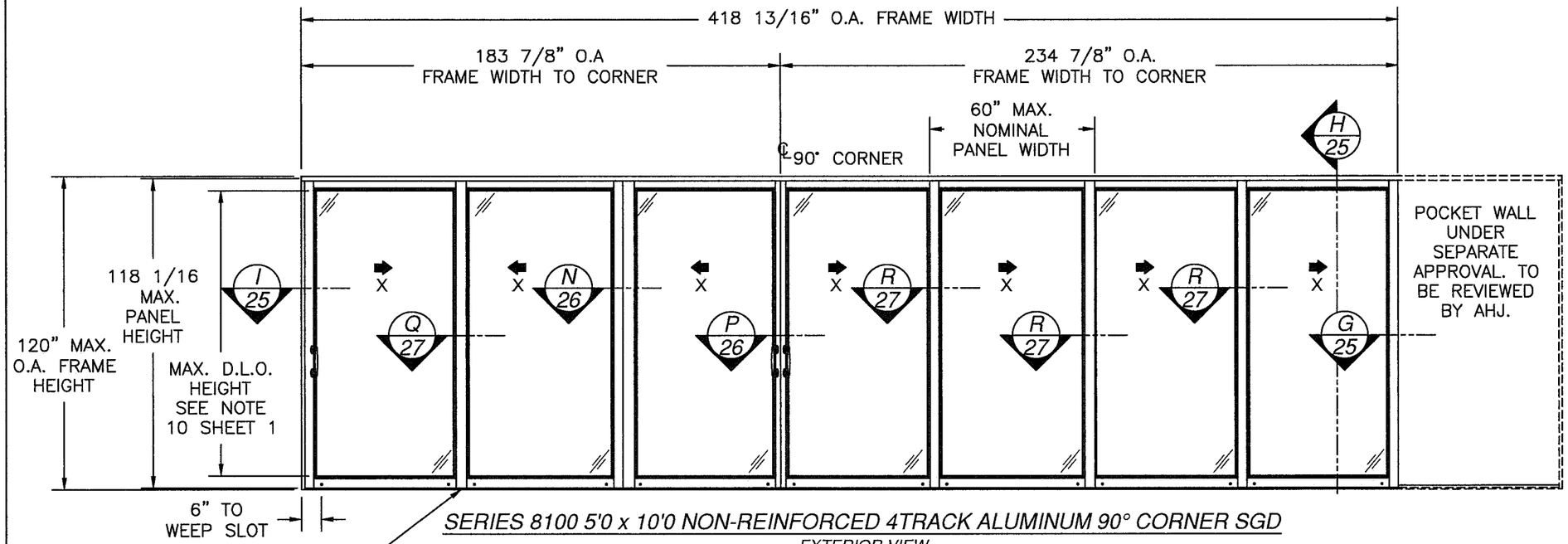

SERIES 8100 5'0 x 10'0 NON-REINFORCED 4TRACK ALUMINUM 90° CORNER SGD

EXTERIOR VIEW

SEVEN PANELS ON 2TRACK FRAME SHOWN, UNLIMITED NUMBER OF PANELS IN UNLIMITED CONFIGURATIONS, BYPASS OR 90° CORNER, ON 2, 3,4 OR 5 TRACK FRAME, WITH OR WITHOUT POCKETS, ARE APPROVED AS LONG AS INDIVIDUAL PANEL SIZE DOES NOT EXCEED MAXIMUM PANEL SIZE, USES VERTICAL CONDITIONS AS SHOWN AND THE TOTAL FRAME AREA DOES NOT EXCEED 523 SQUARE FEET.

NON-REINFORCED UNIT WITH 2-1/4" SILL RISER

DESIGN PRESSURE RATING	IMPACT RATING
±50.0PSF	LARGE MISSILE IMPACT

FOR WOOD, MASONRY/CONCRETE AND METAL INSTALLATION
FOR ADDITIONAL SIZES, RISERS AND RATINGS,
SEE SHEET 18

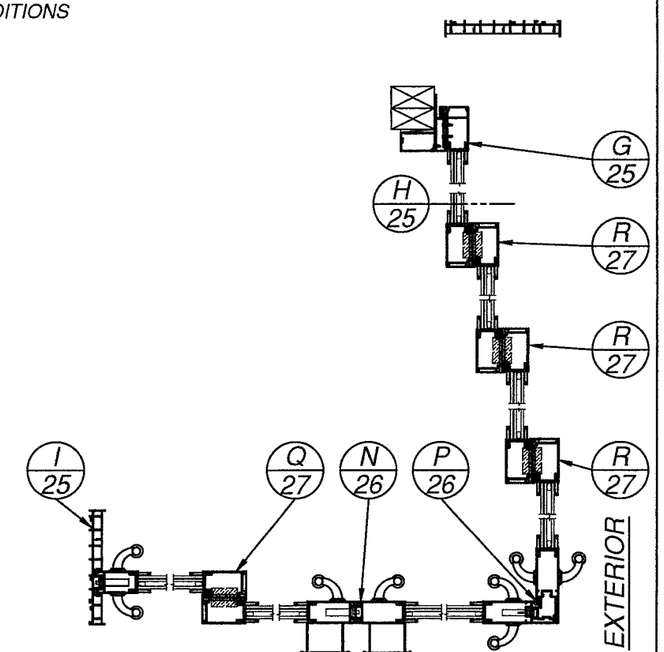

EXTERIOR
SERIES 8100 5'0 x 10'0 ALUMINUM 90° CORNER SGD

NON-REINFORCED 4 TRACK LAYOUT

PANEL HEIGHT AND D.L.O. FORMULA
PANEL HEIGHT = UNIT HEIGHT − 1 9/16"
MAXIMUM D.L.O. HEIGHT = PANEL HEIGHT − 9 1/2"
D.L.O. WIDTH = NOMINAL PANEL WIDTH − 9 1/2"

PRODUCT REVISED
as complying with the Florida Building Code
NOA-No. 20-0814.05
Expiration Date 11/03/2026
By Ishaq I. Chanda
Miami-Dade Product Control

Revision: NO CHANGES THIS SHEET.

PREPARED BY A. LYNN MILLER
1070 TECHNOLOGY DRIVE
N. VENICE, FL 34275
(941) 480-1600
REGISTRATION #29296

WINDOOR® INCORPORATED

WINDOOR INCORPORATED
104 TRIPLE DIAMOND BLVD.
NORTH VENICE, FL 34275
(833) 554-5432

Series	Desc.	DWG No.	Rev.
SGD8100A	ELEVATION - 5'x10' 90 DEG 4T DP AT MAX SIZE	8100CORNER-NOA	

Title	Drawn By	Date
ALUMINUM SLIDING GLASS DOOR (LM)	ERIN KOSS	07/28/20

Sheet 7 OF 36

ANTHONY LYNN MILLER
LICENSE
No. 58705
STATE OF FLORIDA
PROFESSIONAL ENGINEER
7/31/20

A. LYNN MILLER, P.E.
P.E.# 58705

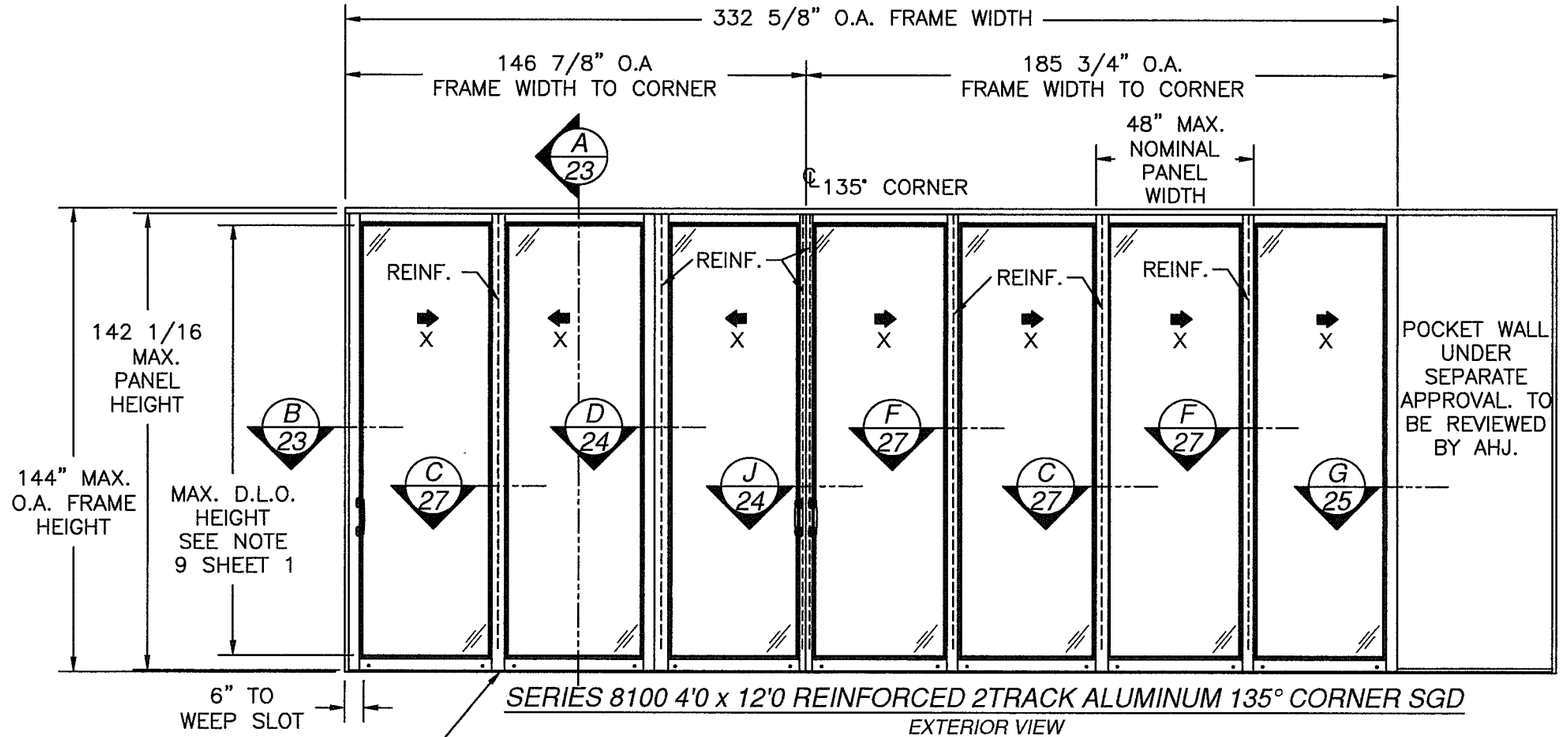

SERIES 8100 4'0 x 12'0 REINFORCED 2TRACK ALUMINUM 135° CORNER SGD

EXTERIOR VIEW

SEVEN PANELS ON 2TRACK FRAME SHOWN, UNLIMITED NUMBER OF PANELS IN UNLIMITED CONFIGURATIONS, BYPASS OR 135° CORNER, ON 2, 3, 4 OR 5 TRACK FRAME, WITH OR WITHOUT POCKETS, ARE APPROVED AS LONG AS INDIVIDUAL PANEL SIZE DOES NOT EXCEED MAXIMUM PANEL SIZE, USES VERTICAL CONDITIONS AS SHOWN AND THE TOTAL FRAME AREA DOES NOT EXCEED 499 SQUARE FEET.

REINFORCED UNIT WITH 3" SILL RISER

DESIGN PRESSURE RATING	IMPACT RATING
±70.0PSF	LARGE MISSILE IMPACT

FOR MASONRY/CONCRETE AND METAL INSTALLATION
FOR ADDITIONAL SIZES, RISERS AND RATINGS, SEE SHEET 15

REINFORCED UNIT WITH 2-1/4" SILL RISER

DESIGN PRESSURE RATING	IMPACT RATING
±57.3PSF	LARGE MISSILE IMPACT

FOR WOOD INSTALLATION
FOR ADDITIONAL SIZES, RISERS AND RATINGS, SEE SHEET 17

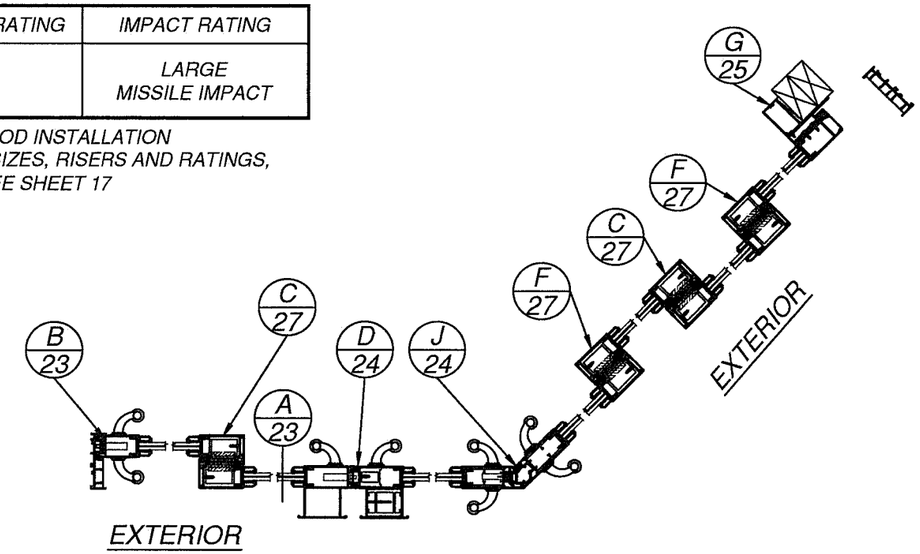

SERIES 8100 4'0 x 12'0 ALUMINUM 135° CORNER SGD

REINFORCED 2 TRACK LAYOUT

PANEL HEIGHT AND D.L.O. FORMULA
PANEL HEIGHT = UNIT HEIGHT – 1 9/16"
MAXIMUM D.L.O. HEIGHT = PANEL HEIGHT – 9 1/2"
D.L.O. WIDTH = NOMINAL PANEL WIDTH – 9 1/2"

PRODUCT REVISED
as complying with the Florida Building Code
NOA-No. 20-0814.05
Expiration Date 11/03/2026
By Ishaq I. Chanda
Miami-Dade Product Control

Revision: NO CHANGES THIS SHEET.

WINDOOR® INCORPORATED
WINDOOR INCORPORATED
104 TRIPLE DIAMOND BLVD.
NORTH VENICE, FL 34275
(833) 554-5432

PREPARED BY A. LYNN MILLER
1070 TECHNOLOGY DRIVE
N. VENICE, FL 34275
(941) 480-1600
REGISTRATION #29296

Series	Sheet	DWG No.	Drawn By	Date	Rev.
SGD8100A	8 OF 36	8100CORNER-NOA	ERIN KOSS	07/28/20	

Title: ALUMINUM SLIDING GLASS DOOR (LM)
Desc.: ELEVATION - 4'x12' REINF. 135 DEG 2T DP AT MAX SIZE

ANTHONY LYNN MILLER
LICENSE
No. 58705
7/31/20
STATE OF FLORIDA
PROFESSIONAL ENGINEER

A. LYNN MILLER, P.E.
P.E.# 58705

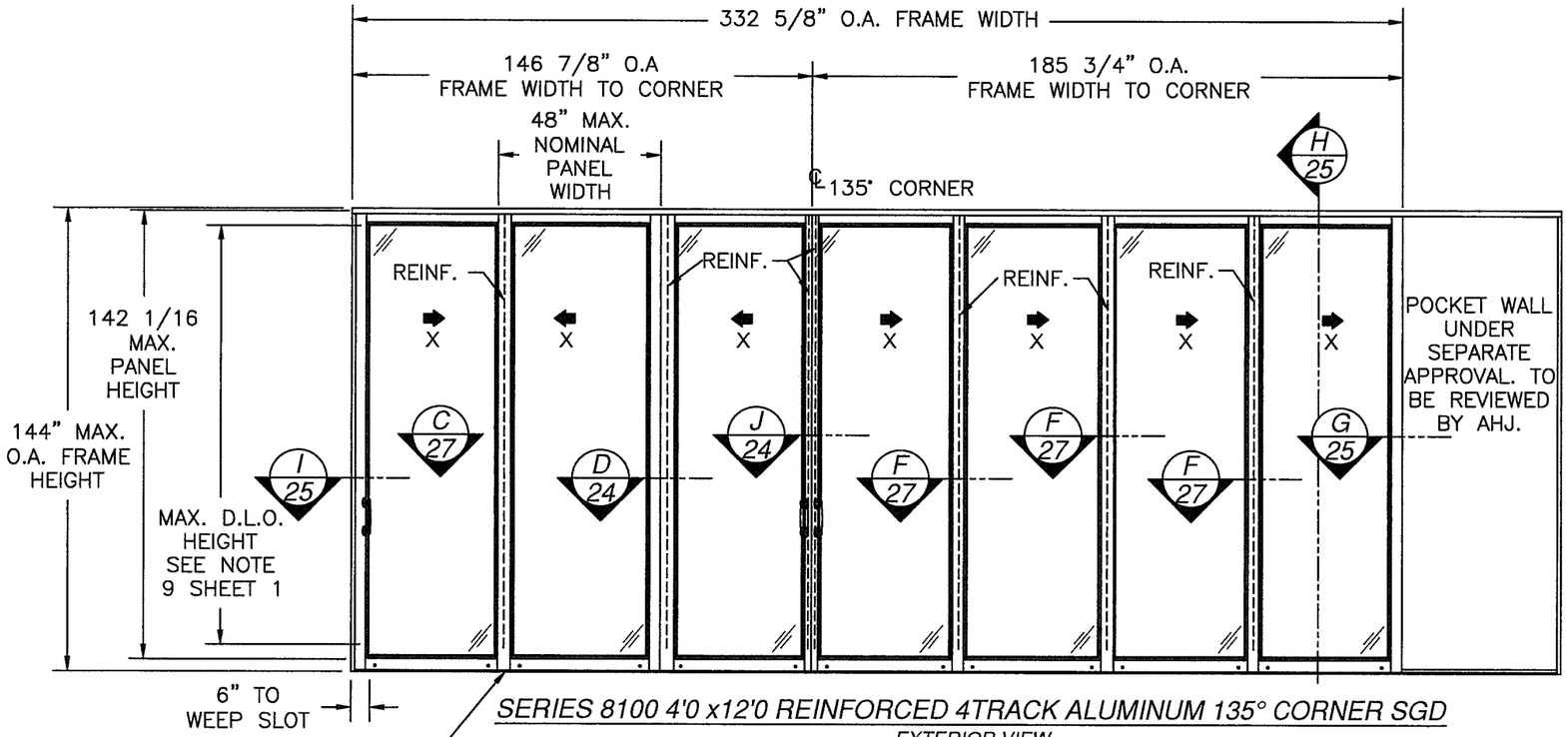

SERIES 8100 4'0 x12'0 REINFORCED 4TRACK ALUMINUM 135° CORNER SGD

EXTERIOR VIEW

SEVEN PANELS ON 4TRACK FRAME SHOWN, UNLIMITED NUMBER OF PANELS IN UNLIMITED CONFIGURATIONS, BYPASS OR 135° CORNER, ON 2, 3, 4 OR 5 TRACK FRAME, WITH OR WITHOUT POCKETS, ARE APPROVED AS LONG AS INDIVIDUAL PANEL SIZE DOES NOT EXCEED MAXIMUM PANEL SIZE, USES VERTICAL CONDITIONS AS SHOWN AND THE TOTAL FRAME AREA DOES NOT EXCEED 499 SQUARE FEET.

REINFORCED UNIT WITH 3" SILL RISER

DESIGN PRESSURE RATING	IMPACT RATING
±70.0PSF	LARGE MISSILE IMPACT

FOR MASONRY/CONCRETE AND METAL INSTALLATION
FOR ADDITIONAL SIZES, RISERS AND RATINGS, SEE SHEET 15

REINFORCED UNIT WITH 2-1/4" SILL RISER

DESIGN PRESSURE RATING	IMPACT RATING
±57.3PSF	LARGE MISSILE IMPACT

FOR WOOD INSTALLATION
FOR ADDITIONAL SIZES, RISERS AND RATINGS, SEE SHEET 17

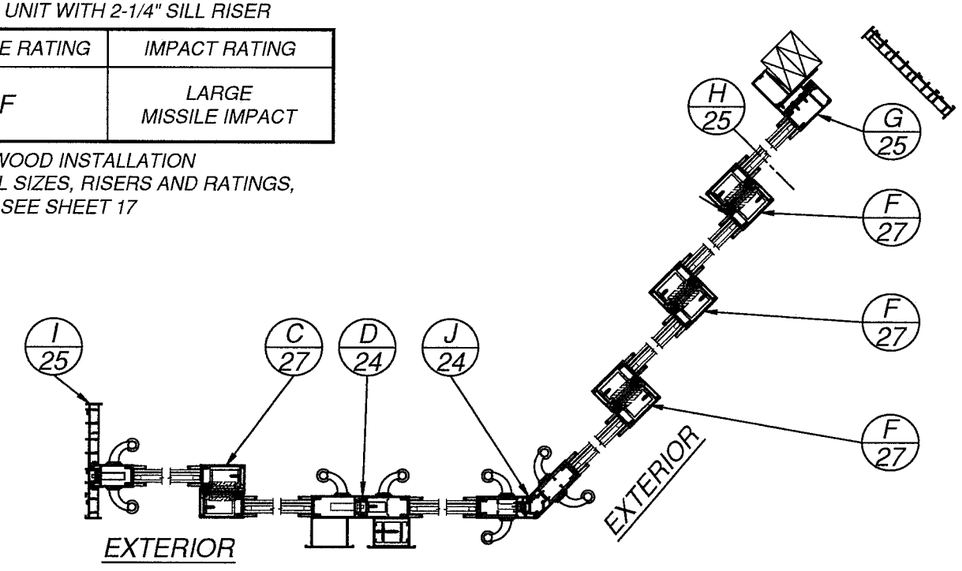

SERIES 8100 4'0 x 12'0 ALUMINUM 135° CORNER SGD

REINFORCED 4 TRACK LAYOUT

PANEL HEIGHT AND D.L.O. FORMULA
PANEL HEIGHT = UNIT HEIGHT – 1 9/16"
MAXIMUM D.L.O. HEIGHT = PANEL HEIGHT – 9 1/2"
D.L.O. WIDTH = NOMINAL PANEL WIDTH – 9 1/2"

PRODUCT REVISED
as complying with the Florida Building Code
NOA-No. 20-0814.05
Expiration Date 11/03/2026
By Ishaq I. Chanda
Miami-Dade Product Control

Revision: NO CHANGES THIS SHEET.

PREPARED BY A. LYNN MILLER
1070 TECHNOLOGY DRIVE
N. VENICE, FL 34275
(941) 480-1600
REGISTRATION #29296

WINDOOR INCORPORATED
104 TRIPLE DIAMOND BLVD.
NORTH VENICE, FL 34275
(833) 554-5432

Series	Sheet	DWG No.	Drawn By	Date	Rev.
SGD8100A	9 OF 36	8100CORNER-NOA	ERIN KOSS	07/28/20	

Desc.: ELEVATION - 4'x12' REINF. 135 DEG 4T DP AT MAX SIZE

Title: ALUMINUM SLIDING GLASS DOOR (LM)

ANTHONY LYNN MILLER
LICENSE
No. 58705
STATE OF FLORIDA
PROFESSIONAL ENGINEER
7/31/20

A. LYNN MILLER, P.E.
P.E.# 58705

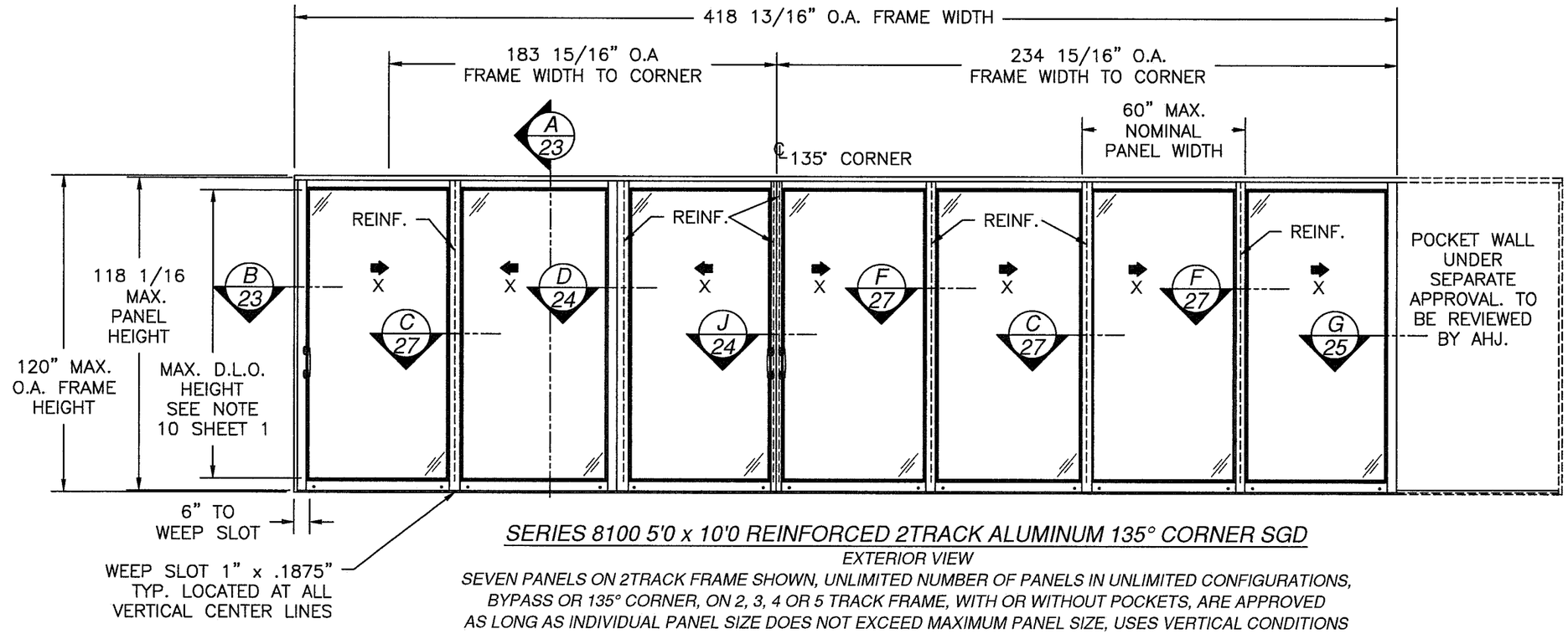

SERIES 8100 5'0 x 10'0 REINFORCED 2TRACK ALUMINUM 135° CORNER SGD

EXTERIOR VIEW

SEVEN PANELS ON 2TRACK FRAME SHOWN, UNLIMITED NUMBER OF PANELS IN UNLIMITED CONFIGURATIONS, BYPASS OR 135° CORNER, ON 2, 3, 4 OR 5 TRACK FRAME, WITH OR WITHOUT POCKETS, ARE APPROVED AS LONG AS INDIVIDUAL PANEL SIZE DOES NOT EXCEED MAXIMUM PANEL SIZE, USES VERTICAL CONDITIONS AS SHOWN AND THE TOTAL FRAME AREA DOES NOT EXCEED 523 SQUARE FEET.

REINFORCED UNIT WITH 3" SILL RISER

DESIGN PRESSURE RATING	IMPACT RATING
±70.0PSF	LARGE MISSILE IMPACT

FOR MASONRY/CONCRETE AND METAL INSTALLATION
FOR ADDITIONAL SIZES, RISERS AND RATINGS,
SEE SHEET 15

REINFORCED UNIT WITH 3" SILL RISER

DESIGN PRESSURE RATING	IMPACT RATING
±61.2PSF	LARGE MISSILE IMPACT

FOR WOOD INSTALLATION
FOR ADDITIONAL SIZES, RISERS AND RATINGS,
SEE SHEET 17

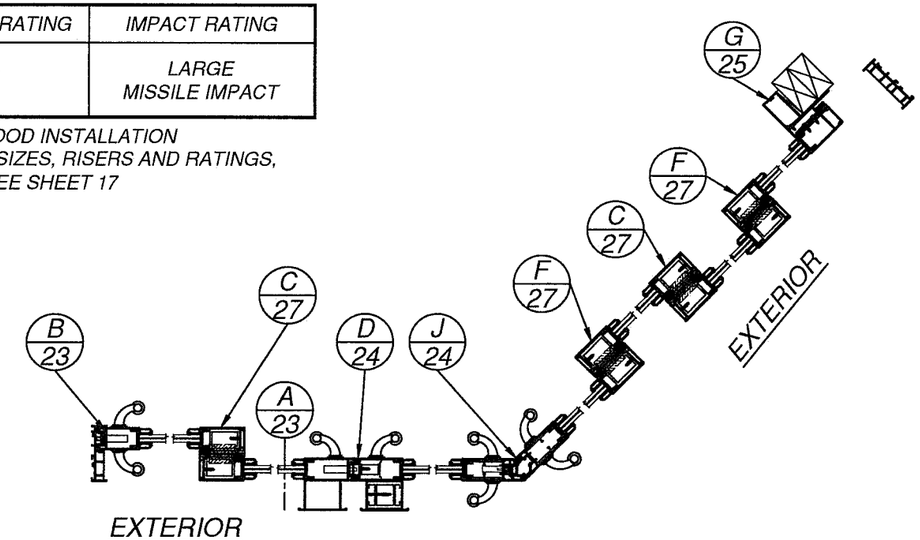

SERIES 8100 5'0 x 10'0 ALUMINUM 135° CORNER SGD

REINFORCED 2 TRACK LAYOUT

PANEL HEIGHT AND D.L.O. FORMULA
PANEL HEIGHT = UNIT HEIGHT − 1 9/16"
MAXIMUM D.L.O. HEIGHT = PANEL HEIGHT − 9 1/2"
D.L.O. WIDTH = NOMINAL PANEL WIDTH − 9 1/2"

PRODUCT REVISED
as complying with the Florida Building Code
NOA-No. 20-0814.05
Expiration Date 11/03/2026
By Ishwar I. Chanda
Miami-Dade Product Control

Revision: NO CHANGES THIS SHEET.

PREPARED BY A. LYNN MILLER
1070 TECHNOLOGY DRIVE
N. VENICE, FL 34275
(941) 480-1600
REGISTRATION #29296

Date: 07/28/20
Drawn By: ERIN KOSS
Rev.

WINDOOR® INCORPORATED
WINDOOR INCORPORATED
104 TRIPLE DIAMOND BLVD.
NORTH VENICE, FL 34275
(833) 554-5432

Title: ALUMINUM SLIDING GLASS DOOR (LM)
Desc.: ELEVATION - 5'x10' REINF. 135 DEG 2T DP AT MAX SIZE
DWG No.: 8100CORNER-NOA
Sheet: 10 OF 36
Series: SGD8100A

ANTHONY LYNN MILLER
LICENSE
No. 58705
STATE OF FLORIDA
PROFESSIONAL ENGINEER
7/31/20

A. LYNN MILLER, P.E.
P.E.# 58705

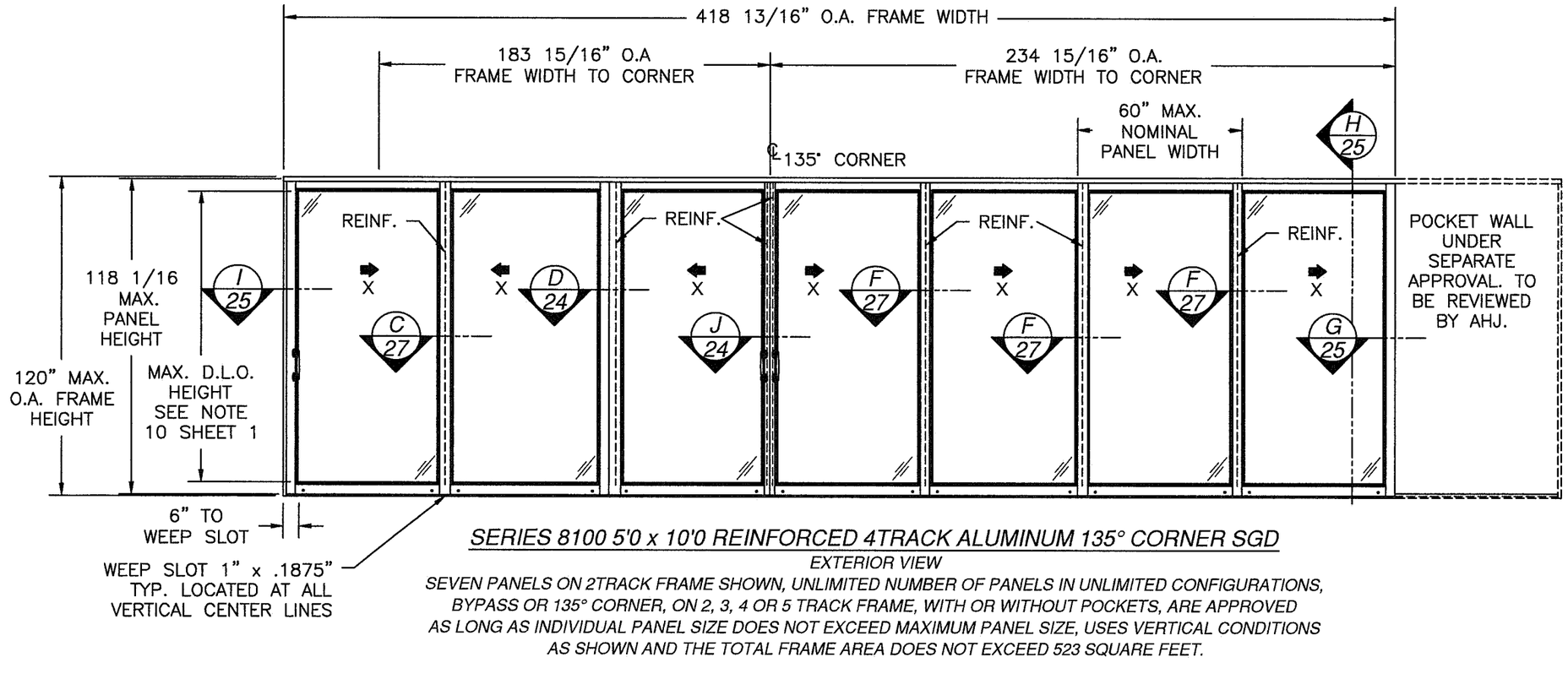

SERIES 8100 5'0 x 10'0 REINFORCED 4TRACK ALUMINUM 135° CORNER SGD

EXTERIOR VIEW

SEVEN PANELS ON 2TRACK FRAME SHOWN, UNLIMITED NUMBER OF PANELS IN UNLIMITED CONFIGURATIONS, BYPASS OR 135° CORNER, ON 2, 3, 4 OR 5 TRACK FRAME, WITH OR WITHOUT POCKETS, ARE APPROVED AS LONG AS INDIVIDUAL PANEL SIZE DOES NOT EXCEED MAXIMUM PANEL SIZE, USES VERTICAL CONDITIONS AS SHOWN AND THE TOTAL FRAME AREA DOES NOT EXCEED 523 SQUARE FEET.

REINFORCED UNIT WITH 3" SILL RISER

DESIGN PRESSURE RATING	IMPACT RATING
±70.0PSF	LARGE MISSILE IMPACT

FOR MASONRY/CONCRETE AND METAL INSTALLATION
FOR ADDITIONAL SIZES, RISERS AND RATINGS,
SEE SHEET 15

REINFORCED UNIT WITH 3" SILL RISER

DESIGN PRESSURE RATING	IMPACT RATING
±61.2PSF	LARGE MISSILE IMPACT

FOR WOOD INSTALLATION
FOR ADDITIONAL SIZES, RISERS AND RATINGS,
SEE SHEET 17

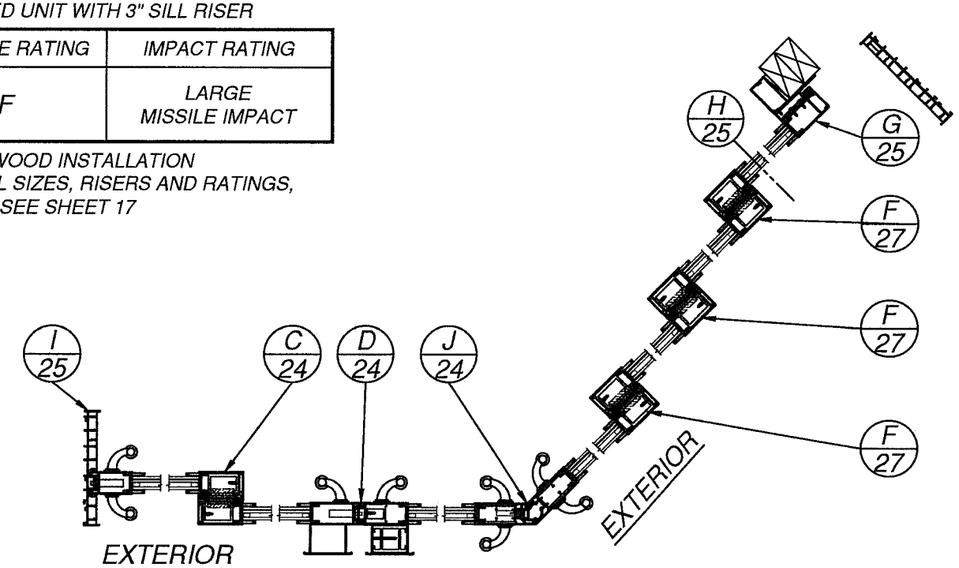

SERIES 8100 5'0 x 10'0 ALUMINUM 135° CORNER SGD

REINFORCED 4 TRACK LAYOUT

PANEL HEIGHT AND D.L.O. FORMULA
PANEL HEIGHT = UNIT HEIGHT – 1 9/16"
MAXIMUM D.L.O. HEIGHT = PANEL HEIGHT – 9 1/2"
D.L.O. WIDTH = NOMINAL PANEL WIDTH – 9 1/2"

PRODUCT REVISED
as complying with the Florida Building Code
NOA-No. 20-0814.05
Expiration Date 11/03/2026
By Ishaq I. Chanda
Miami-Dade Product Control

Revision: NO CHANGES THIS SHEET.

PREPARED BY A. LYNN MILLER
1070 TECHNOLOGY DRIVE
N. VENICE, FL 34275
(941) 480-1600
REGISTRATION #29296

Date: 07/28/20
Drawn By: ERIN KOSS
DWG No.: 8100CORNER-NOA
Rev.:

WINDOOR® INCORPORATED
WINDOOR INCORPORATED
104 TRIPLE DIAMOND BLVD.
NORTH VENICE, FL 34275
(833) 554-5432

Title: ALUMINUM SLIDING GLASS DOOR (LM)
Desc.: ELEVATION - 5'x10' REINF. 135 DEG 4T DP AT MAX SIZE
Series: SGD8100A
Sheet: 11 OF 36

ANTHONY LYNN MILLER
LICENSE
No. 58705
STATE OF FLORIDA
PROFESSIONAL ENGINEER
7/31/20

A. LYNN MILLER, P.E.
P.E.# 58705

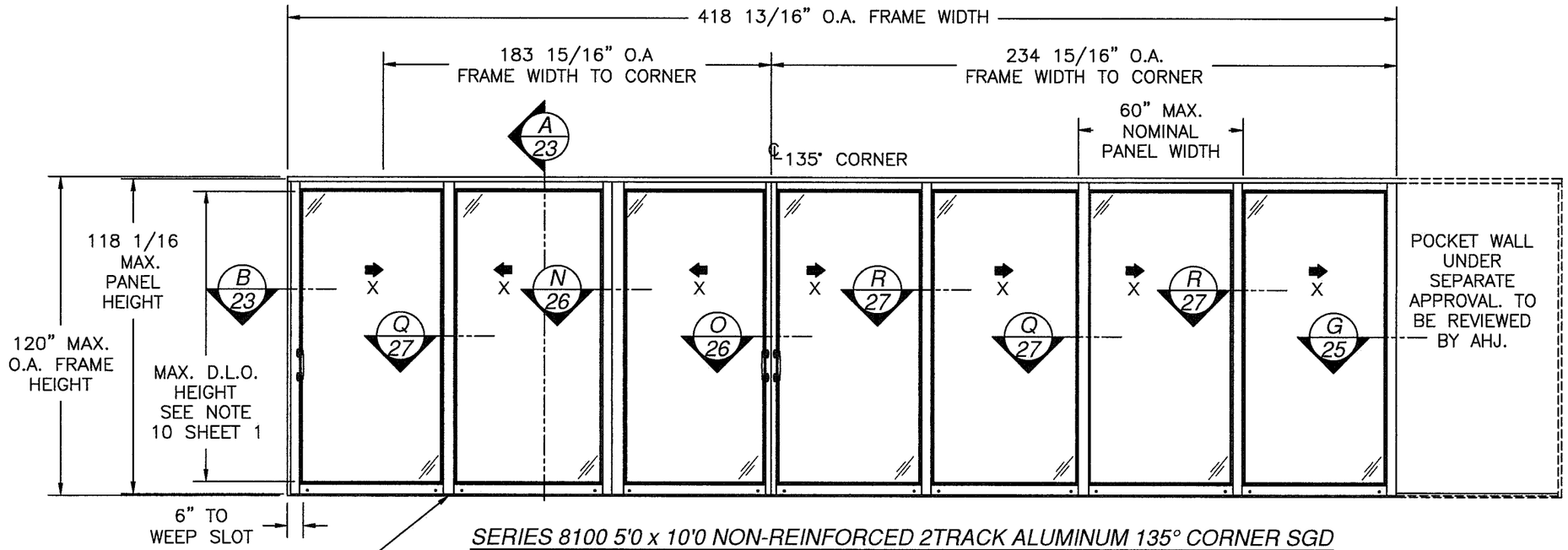

SERIES 8100 5'0 x 10'0 NON-REINFORCED 2TRACK ALUMINUM 135° CORNER SGD

EXTERIOR VIEW

SEVEN PANELS ON 2TRACK FRAME SHOWN, UNLIMITED NUMBER OF PANELS IN UNLIMITED CONFIGURATIONS, BYPASS OR 135° CORNER, ON 2, 3, 4 OR 5 TRACK FRAME, WITH OR WITHOUT POCKETS, ARE APPROVED AS LONG AS INDIVIDUAL PANEL SIZE DOES NOT EXCEED MAXIMUM PANEL SIZE USES VERTICAL CONDITIONS AS SHOWN AND THE TOTAL FRAME AREA DOES NOT EXCEED 523 SQUARE FEET.

NON-REINFORCED UNIT WITH 2-1/4" SILL RISER

DESIGN PRESSURE RATING	IMPACT RATING
±50.0PSF	LARGE MISSILE IMPACT

FOR WOOD, MASONRY/CONCRETE AND METAL INSTALLATION
FOR ADDITIONAL SIZES, RISERS AND RATINGS,
SEE SHEET 18

PANEL HEIGHT AND D.L.O. FORMULA
PANEL HEIGHT = UNIT HEIGHT – 1 9/16"
MAXIMUM D.L.O. HEIGHT = PANEL HEIGHT – 9 1/2"
D.L.O. WIDTH = NOMINAL PANEL WIDTH – 9 1/2"

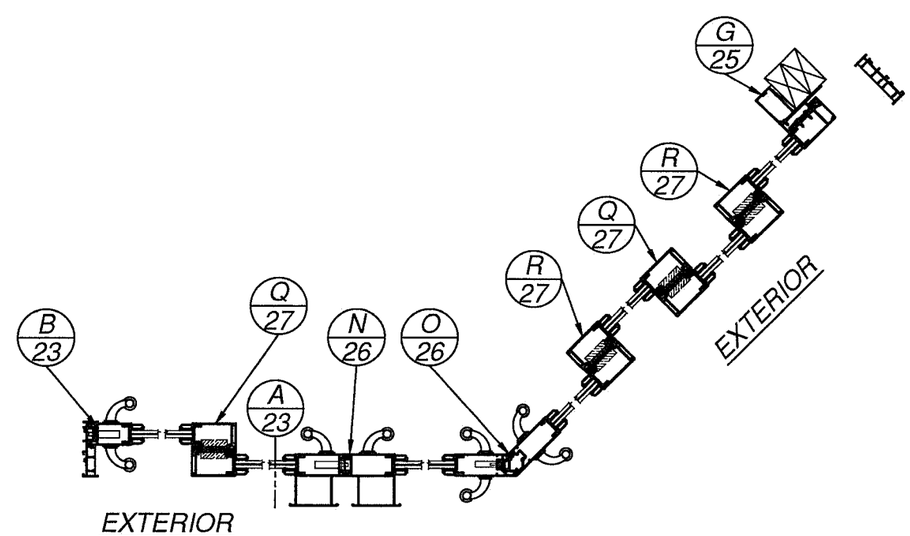

SERIES 8100 5'0 x 10'0 ALUMINUM 135° CORNER SGD

NON-REINFORCED 2 TRACK LAYOUT

PRODUCT REVISED
as complying with the Florida Building Code
NOA-No. 20-0814.05
Expiration Date 11/03/2026
By Ishaq I. Chanda
Miami-Dade Product Control

Revision: NO CHANGES THIS SHEET.

WINDOOR® INCORPORATED
WINDOOR INCORPORATED
104 TRIPLE DIAMOND BLVD.
NORTH VENICE, FL 34275
(833) 554-5432

PREPARED BY A. LYNN MILLER
1070 TECHNOLOGY DRIVE
N. VENICE, FL 34275
(941) 480-1600
REGISTRATION #29296

Series	Desc.	Title	Sheet	DWG No.	Drown By	Date	Rev.
SGD8100A	ELEVATION - 5'x10' 135 DEG 2T DP AT MAX SIZE	ALUMINUM SLIDING GLASS DOOR (LM)	12 OF 36	8100CORNER-NOA	ERIN KOSS	07/28/20	

ANTHONY LYNN MILLER
LICENSE
No. 58705
7/31/20
STATE OF FLORIDA
PROFESSIONAL ENGINEER
A. LYNN MILLER, P.E.
P.E.# 58705

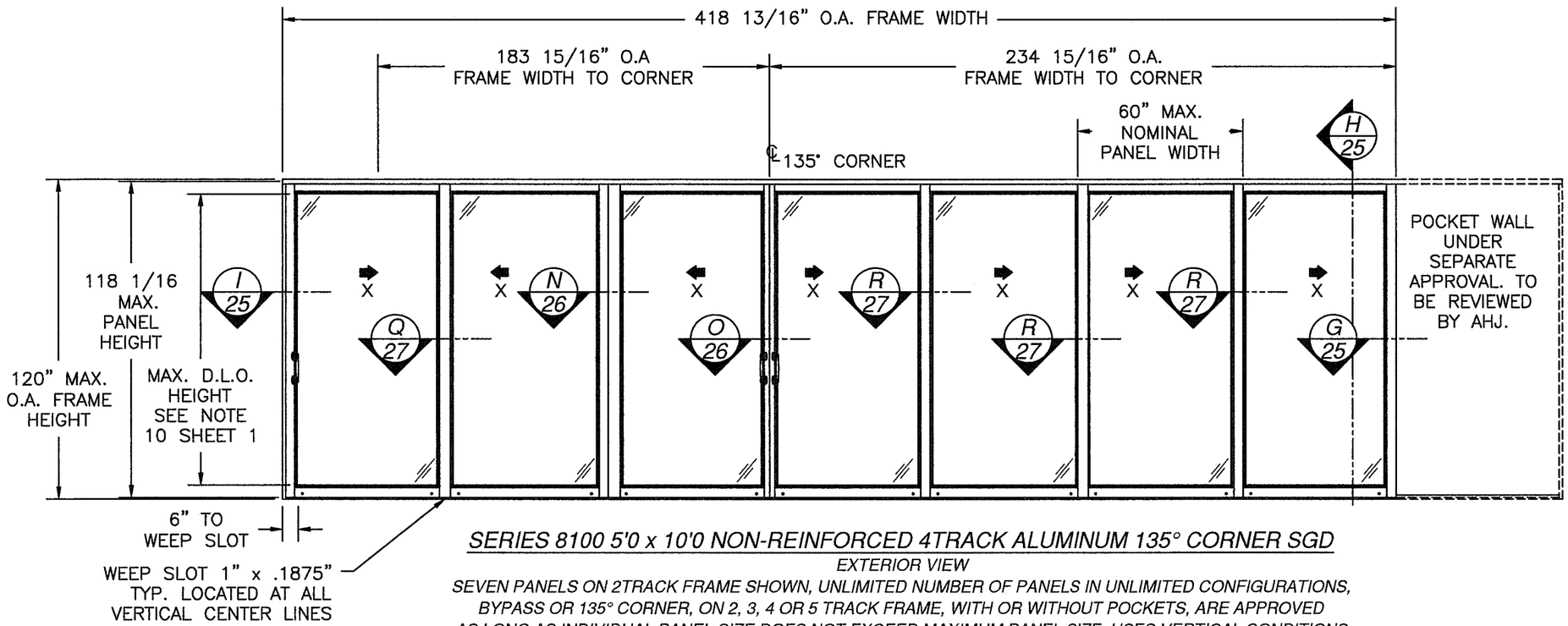

SERIES 8100 5'0 x 10'0 NON-REINFORCED 4TRACK ALUMINUM 135° CORNER SGD

EXTERIOR VIEW

SEVEN PANELS ON 2TRACK FRAME SHOWN, UNLIMITED NUMBER OF PANELS IN UNLIMITED CONFIGURATIONS, BYPASS OR 135° CORNER, ON 2, 3, 4 OR 5 TRACK FRAME, WITH OR WITHOUT POCKETS, ARE APPROVED AS LONG AS INDIVIDUAL PANEL SIZE DOES NOT EXCEED MAXIMUM PANEL SIZE, USES VERTICAL CONDITIONS AS SHOWN AND THE TOTAL FRAME AREA DOES NOT EXCEED 523 SQUARE FEET.

NON-REINFORCED UNIT WITH 2-1/4" SILL RISER

DESIGN PRESSURE RATING	IMPACT RATING
±50.0PSF	LARGE MISSILE IMPACT

FOR WOOD, MASONRY/CONCRETE AND METAL INSTALLATION
FOR ADDITIONAL SIZES, RISERS AND RATINGS,
SEE SHEET 18

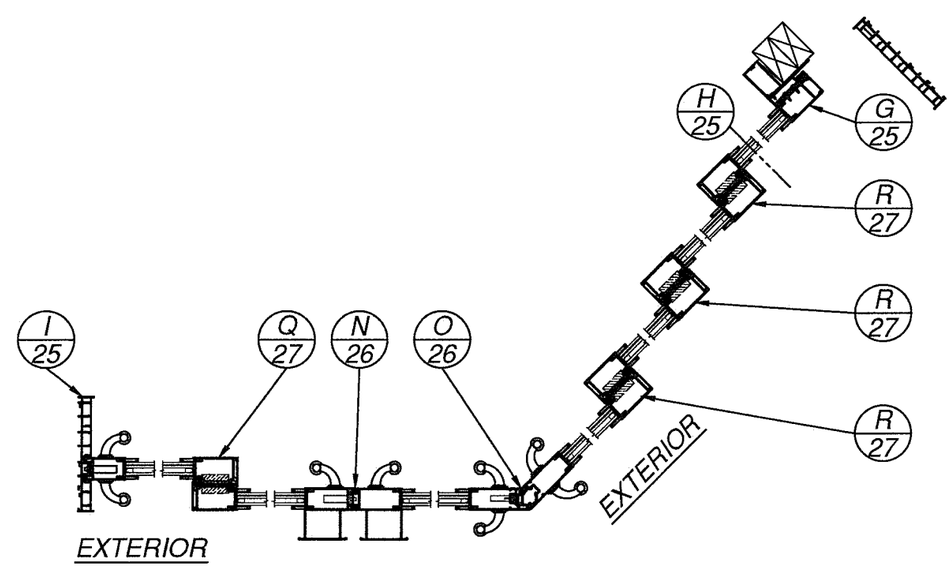

SERIES 8100 5'0 x 10'0 ALUMINUM 135° CORNER SGD

NON-REINFORCED 4 TRACK LAYOUT

PANEL HEIGHT AND D.L.O. FORMULA
PANEL HEIGHT = UNIT HEIGHT – 1 9/16"
MAXIMUM D.L.O. HEIGHT = PANEL HEIGHT – 9 1/2"
D.L.O. WIDTH = NOMINAL PANEL WIDTH – 9 1/2"

PRODUCT REVISED
as complying with the Florida Building Code
NOA–No. 20-0814.05
Expiration Date 11/03/2026
By Ishaq I. Chanda
Miami–Dade Product Control

Revision: NO CHANGES THIS SHEET.

WINDOOR® INCORPORATED
WINDOOR INCORPORATED
104 TRIPLE DIAMOND BLVD.
NORTH VENICE, FL 34275
(833) 554-5432
PREPARED BY A. LYNN MILLER
1070 TECHNOLOGY DRIVE
N. VENICE, FL 34275
(941) 480-1600
REGISTRATION #29296

Title	Date	Rev.
ALUMINUM SLIDING GLASS DOOR (LM)	07/28/20	

Desc.	Drawn By	Series
ELEVATION - 5'x10' 135 DEG 4T DP AT MAX SIZE	ERIN KOSS	SGD8100A

Sheet	DWG No.	Rev.
13 OF 36	8100CORNER-NOA	

ANTHONY LYNN MILLER
LICENSE
No. 58705
STATE OF FLORIDA
PROFESSIONAL ENGINEER
7/31/20

A. LYNN MILLER, P.E.
P.E.# 58705

90° REINFORCED
GLAZING OPTIONS A, B, C & D
MASONRY/CONCRETE OR METAL INSTALLATION

1-3/4" SILL RISER

Maximum Design Pressure Capacity Chart (psf)														
Frame Height (in)	Panel Width (in)													
	24.0		30.0		36.0		42.0		48.0		54.0		60.0	
	Pos	Neg	Pos	Neg	Pos	Neg	Pos	Neg	Pos	Neg	Pos	Neg	Pos	Neg
80.0	45.0	105.0	45.0	105.0	45.0	105.0	45.0	105.0	45.0	105.0	45.0	105.0	45.0	105.0
84.0	45.0	105.0	45.0	105.0	45.0	105.0	45.0	105.0	45.0	105.0	45.0	105.0	45.0	105.0
96.0	45.0	105.0	45.0	105.0	45.0	105.0	45.0	105.0	45.0	105.0	45.0	105.0	45.0	105.0
98.0	45.0	105.0	45.0	105.0	45.0	105.0	45.0	105.0	45.0	105.0	45.0	105.0	45.0	105.0
108.0	45.0	105.0	45.0	105.0	45.0	105.0	45.0	105.0	45.0	100.0	45.0	98.8	45.0	92.3
114.0	45.0	105.0	45.0	105.0	45.0	105.0	45.0	103.2	45.0	93.3	45.0	92.0	45.0	85.7
120.0	45.0	105.0	45.0	105.0	45.0	105.0	45.0	97.0	45.0	87.5	45.0	88.0	45.0	80.0
126.0	45.0	105.0	45.0	105.0	45.0	103.7	45.0	91.4	45.0	82.4	-	-	-	-
132.0	45.0	105.0	45.0	105.0	45.0	98.2	45.0	86.5	45.0	77.8	-	-	-	-
138.0	45.0	105.0	45.0	105.0	45.0	93.3	45.0	82.1	45.0	73.7	-	-	-	-
144.0	45.0	105.0	45.0	104.2	45.0	88.9	45.0	78.0	45.0	70.0	-	-	-	-

3" SILL RISER

Maximum Design Pressure Capacity Chart (psf)														
Frame Height (in)	Panel Width (in)													
	24.0		30.0		36.0		42.0		48.0		54.0		60.0	
	Pos	Neg	Pos	Neg	Pos	Neg	Pos	Neg	Pos	Neg	Pos	Neg	Pos	Neg
80.0	80.0	105.0	80.0	105.0	80.0	105.0	80.0	105.0	80.0	105.0	80.0	105.0	80.0	105.0
84.0	80.0	105.0	80.0	105.0	80.0	105.0	80.0	105.0	80.0	105.0	80.0	105.0	80.0	105.0
96.0	80.0	105.0	80.0	105.0	80.0	105.0	80.0	105.0	80.0	105.0	80.0	105.0	80.0	105.0
98.0	80.0	105.0	80.0	105.0	80.0	105.0	80.0	105.0	80.0	105.0	80.0	105.0	80.0	105.0
108.0	80.0	105.0	80.0	105.0	80.0	105.0	80.0	105.0	80.0	100.0	80.0	98.8	80.0	92.3
114.0	80.0	105.0	80.0	105.0	80.0	105.0	80.0	103.2	80.0	93.3	80.0	92.0	80.0	85.7
120.0	80.0	105.0	80.0	105.0	80.0	105.0	80.0	97.0	80.0	87.5	80.0	88.0	80.0	80.0
126.0	80.0	105.0	80.0	105.0	80.0	103.7	80.0	91.4	80.0	82.4	-	-	-	-
132.0	80.0	105.0	80.0	105.0	80.0	98.2	80.0	86.5	77.8	77.8	-	-	-	-
138.0	80.0	105.0	80.0	105.0	80.0	93.3	80.0	82.1	73.7	73.7	-	-	-	-
144.0	80.0	105.0	80.0	104.2	80.0	88.9	78.0	78.0	70.0	70.0	-	-	-	-

2-1/4" SILL RISER

Maximum Design Pressure Capacity Chart (psf)														
Frame Height (in)	Panel Width (in)													
	24.0		30.0		36.0		42.0		48.0		54.0		60.0	
	Pos	Neg	Pos	Neg	Pos	Neg	Pos	Neg	Pos	Neg	Pos	Neg	Pos	Neg
80.0	60.0	105.0	60.0	105.0	60.0	105.0	60.0	105.0	60.0	105.0	60.0	105.0	60.0	105.0
84.0	60.0	105.0	60.0	105.0	60.0	105.0	60.0	105.0	60.0	105.0	60.0	105.0	60.0	105.0
96.0	60.0	105.0	60.0	105.0	60.0	105.0	60.0	105.0	60.0	105.0	60.0	105.0	60.0	105.0
98.0	60.0	105.0	60.0	105.0	60.0	105.0	60.0	105.0	60.0	105.0	60.0	105.0	60.0	105.0
108.0	60.0	105.0	60.0	105.0	60.0	105.0	60.0	105.0	60.0	100.0	60.0	98.8	60.0	92.3
114.0	60.0	105.0	60.0	105.0	60.0	105.0	60.0	103.2	60.0	93.3	60.0	92.0	60.0	85.7
120.0	60.0	105.0	60.0	105.0	60.0	105.0	60.0	97.0	60.0	87.5	60.0	88.0	60.0	80.0
126.0	60.0	105.0	60.0	105.0	60.0	103.7	60.0	91.4	60.0	82.4	-	-	-	-
132.0	60.0	105.0	60.0	105.0	60.0	98.2	60.0	86.5	60.0	77.8	-	-	-	-
138.0	60.0	105.0	60.0	105.0	60.0	93.3	60.0	82.1	60.0	73.7	-	-	-	-
144.0	60.0	105.0	60.0	104.2	60.0	88.9	60.0	78.0	60.0	70.0	-	-	-	-

3-1/2" & 4-1/4" SILL RISERS

Maximum Design Pressure Capacity Chart (psf)														
Frame Height (in)	Panel Width (in)													
	24.0		30.0		36.0		42.0		48.0		54.0		60.0	
	Pos	Neg	Pos	Neg	Pos	Neg	Pos	Neg	Pos	Neg	Pos	Neg	Pos	Neg
80.0	100.0	105.0	100.0	105.0	100.0	105.0	100.0	105.0	100.0	105.0	100.0	105.0	100.0	105.0
84.0	100.0	105.0	100.0	105.0	100.0	105.0	100.0	105.0	100.0	105.0	100.0	105.0	100.0	105.0
96.0	100.0	105.0	100.0	105.0	100.0	105.0	100.0	105.0	100.0	105.0	100.0	105.0	100.0	105.0
98.0	100.0	105.0	100.0	105.0	100.0	105.0	100.0	105.0	100.0	105.0	100.0	105.0	100.0	105.0
108.0	100.0	105.0	100.0	105.0	100.0	105.0	100.0	105.0	100.0	100.0	98.8	98.8	92.3	92.3
114.0	100.0	105.0	100.0	105.0	100.0	105.0	100.0	103.2	93.3	93.3	92.0	92.0	85.7	85.7
120.0	100.0	105.0	100.0	105.0	100.0	105.0	97.0	97.0	87.5	87.5	88.0	88.0	80.0	80.0
126.0	100.0	105.0	100.0	105.0	100.0	103.7	91.4	91.4	82.4	82.4	-	-	-	-
132.0	100.0	105.0	100.0	105.0	98.2	98.2	86.5	86.5	77.8	77.8	-	-	-	-
138.0	100.0	105.0	100.0	105.0	93.3	93.3	82.1	82.1	73.7	73.7	-	-	-	-
144.0	100.0	105.0	100.0	104.2	88.9	88.9	78.0	78.0	70.0	70.0	-	-	-	-

PANEL HEIGHT AND D.L.O. FORMULA
PANEL HEIGHT = UNIT HEIGHT – 1 9/16"
MAXIMUM D.L.O. HEIGHT = PANEL HEIGHT – 9 1/2"
D.L.O. WIDTH = NOMINAL PANEL WIDTH – 9 1/2"

PRODUCT REVISED
as complying with the Florida Building Code
NOA-No. 20-0814.05
Expiration Date 11/03/2026
By Ishaq I. Chanda
Miami-Dade Product Control

Revision: ADDED 4–1/4" RISER.

PREPARED BY A. LYNN MILLER
1070 TECHNOLOGY DRIVE
N. VENICE, FL 34275
(941) 480-1600
REGISTRATION #29296

WINDOOR® INCORPORATED
WINDOOR INCORPORATED
104 TRIPLE DIAMOND BLVD.
NORTH VENICE, FL 34275
(833) 554-5432

Rev.	Date	Drawn By	DWG No.	Sheet
	07/28/20	ERIN KOSS	8100CORNER-NOA	14 OF 36

Title: ALUMINUM SLIDING GLASS DOOR (LM)
Desc.: DP CHARTS - REINF. 90 DEG
Series: SGD8100A

ANTHONY LYNN MILLER
LICENSE
No. 58705
STATE OF FLORIDA
PROFESSIONAL ENGINEER
7/31/20

A. LYNN MILLER, P.E.
P.E.# 58705

135° REINFORCED
GLAZING OPTIONS A, B, C & D
MASONRY/CONCRETE OR METAL INSTALLATION

1-3/4" SILL RISER

Maximum Design Pressure Capacity Chart (psf)														
Frame Height (in)	Panel Width (in)													
	24.0		30.0		36.0		42.0		48.0		54.0		60.0	
	Pos	Neg	Pos	Neg	Pos	Neg	Pos	Neg	Pos	Neg	Pos	Neg	Pos	Neg
80.0	45.0	105.0	45.0	105.0	45.0	105.0	45.0	105.0	45.0	105.0	45.0	105.0	45.0	105.0
84.0	45.0	105.0	45.0	105.0	45.0	105.0	45.0	105.0	45.0	105.0	45.0	105.0	45.0	105.0
96.0	45.0	105.0	45.0	105.0	45.0	105.0	45.0	105.0	45.0	105.0	45.0	101.4	45.0	95.5
98.0	45.0	105.0	45.0	105.0	45.0	105.0	45.0	105.0	45.0	105.0	45.0	98.6	45.0	92.6
108.0	45.0	105.0	45.0	105.0	45.0	105.0	45.0	105.0	45.0	100.0	45.0	86.4	45.0	80.8
114.0	45.0	105.0	45.0	105.0	45.0	105.0	45.0	103.2	45.0	93.3	45.0	80.5	45.0	75.0
120.0	45.0	105.0	45.0	105.0	45.0	105.0	45.0	97.0	45.0	87.5	45.0	75.3	45.0	70.0
126.0	45.0	105.0	45.0	105.0	45.0	103.7	45.0	91.4	45.0	82.4	-	-	-	-
132.0	45.0	105.0	45.0	105.0	45.0	98.2	45.0	86.5	45.0	77.8	-	-	-	-
138.0	45.0	105.0	45.0	105.0	45.0	93.3	45.0	82.1	45.0	73.7	-	-	-	-
144.0	45.0	105.0	45.0	104.2	45.0	88.9	45.0	78.0	45.0	70.0	-	-	-	-

3" SILL RISER

Maximum Design Pressure Capacity Chart (psf)														
Frame Height (in)	Panel Width (in)													
	24.0		30.0		36.0		42.0		48.0		54.0		60.0	
	Pos	Neg	Pos	Neg	Pos	Neg	Pos	Neg	Pos	Neg	Pos	Neg	Pos	Neg
80.0	80.0	105.0	80.0	105.0	80.0	105.0	80.0	105.0	80.0	105.0	80.0	105.0	80.0	105.0
84.0	80.0	105.0	80.0	105.0	80.0	105.0	80.0	105.0	80.0	105.0	80.0	105.0	80.0	105.0
96.0	80.0	105.0	80.0	105.0	80.0	105.0	80.0	105.0	80.0	105.0	80.0	101.4	80.0	95.5
98.0	80.0	105.0	80.0	105.0	80.0	105.0	80.0	105.0	80.0	105.0	80.0	98.6	80.0	92.6
108.0	80.0	105.0	80.0	105.0	80.0	105.0	80.0	105.0	80.0	100.0	80.0	86.4	80.0	80.8
114.0	80.0	105.0	80.0	105.0	80.0	105.0	80.0	103.2	80.0	93.3	80.0	80.5	75.0	75.0
120.0	80.0	105.0	80.0	105.0	80.0	105.0	80.0	97.0	80.0	87.5	75.3	75.3	70.0	70.0
126.0	80.0	105.0	80.0	105.0	80.0	103.7	80.0	91.4	80.0	82.4	-	-	-	-
132.0	80.0	105.0	80.0	105.0	80.0	98.2	80.0	86.5	77.8	77.8	-	-	-	-
138.0	80.0	105.0	80.0	105.0	80.0	93.3	80.0	82.1	73.7	73.7	-	-	-	-
144.0	80.0	105.0	80.0	104.2	80.0	88.9	78.0	78.0	70.0	70.0	-	-	-	-

2-1/4" SILL RISER

Maximum Design Pressure Capacity Chart (psf)														
Frame Height (in)	Panel Width (in)													
	24.0		30.0		36.0		42.0		48.0		54.0		60.0	
	Pos	Neg	Pos	Neg	Pos	Neg	Pos	Neg	Pos	Neg	Pos	Neg	Pos	Neg
80.0	60.0	105.0	60.0	105.0	60.0	105.0	60.0	105.0	60.0	105.0	60.0	105.0	60.0	105.0
84.0	60.0	105.0	60.0	105.0	60.0	105.0	60.0	105.0	60.0	105.0	60.0	105.0	60.0	105.0
96.0	60.0	105.0	60.0	105.0	60.0	105.0	60.0	105.0	60.0	105.0	60.0	101.4	60.0	95.5
98.0	60.0	105.0	60.0	105.0	60.0	105.0	60.0	105.0	60.0	105.0	60.0	98.6	60.0	92.6
108.0	60.0	105.0	60.0	105.0	60.0	105.0	60.0	105.0	60.0	100.0	60.0	86.4	60.0	80.8
114.0	60.0	105.0	60.0	105.0	60.0	105.0	60.0	103.2	60.0	93.3	60.0	80.5	60.0	75.0
120.0	60.0	105.0	60.0	105.0	60.0	105.0	60.0	97.0	60.0	87.5	60.0	75.3	60.0	70.0
126.0	60.0	105.0	60.0	105.0	60.0	103.7	60.0	91.4	60.0	82.4	-	-	-	-
132.0	60.0	105.0	60.0	105.0	60.0	98.2	60.0	86.5	60.0	77.8	-	-	-	-
138.0	60.0	105.0	60.0	105.0	60.0	93.3	60.0	82.1	60.0	73.7	-	-	-	-
144.0	60.0	105.0	60.0	104.2	60.0	88.9	60.0	78.0	60.0	70.0	-	-	-	-

3-1/2" & 4-1/4" SILL RISERS

Maximum Design Pressure Capacity Chart (psf)														
Frame Height (in)	Panel Width (in)													
	24.0		30.0		36.0		42.0		48.0		54.0		60.0	
	Pos	Neg	Pos	Neg	Pos	Neg	Pos	Neg	Pos	Neg	Pos	Neg	Pos	Neg
80.0	100.0	105.0	100.0	105.0	100.0	105.0	100.0	105.0	100.0	105.0	100.0	105.0	100.0	105.0
84.0	100.0	105.0	100.0	105.0	100.0	105.0	100.0	105.0	100.0	105.0	100.0	105.0	100.0	105.0
96.0	100.0	105.0	100.0	105.0	100.0	105.0	100.0	105.0	100.0	105.0	100.0	101.4	95.5	95.5
98.0	100.0	105.0	100.0	105.0	100.0	105.0	100.0	105.0	100.0	105.0	98.6	98.6	92.6	92.6
108.0	100.0	105.0	100.0	105.0	100.0	105.0	100.0	105.0	100.0	100.0	86.4	86.4	80.8	80.8
114.0	100.0	105.0	100.0	105.0	100.0	105.0	100.0	103.2	93.3	93.3	80.5	80.5	75.0	75.0
120.0	100.0	105.0	100.0	105.0	100.0	105.0	97.0	97.0	87.5	87.5	75.3	75.3	70.0	70.0
126.0	100.0	105.0	100.0	105.0	100.0	103.7	91.4	91.4	82.4	82.4	-	-	-	-
132.0	100.0	105.0	100.0	105.0	98.2	98.2	86.5	86.5	77.8	77.8	-	-	-	-
138.0	100.0	105.0	100.0	105.0	93.3	93.3	82.1	82.1	73.7	73.7	-	-	-	-
144.0	100.0	105.0	100.0	104.2	88.9	88.9	78.0	78.0	70.0	70.0	-	-	-	-

PANEL HEIGHT AND D.L.O. FORMULA
PANEL HEIGHT = UNIT HEIGHT – 1 9/16"
MAXIMUM D.L.O. HEIGHT = PANEL HEIGHT – 9 1/2"
D.L.O. WIDTH = NOMINAL PANEL WIDTH – 9 1/2"

PRODUCT REVISED
as complying with the Florida Building Code
NOA-No. 20-0814.05
Expiration Date 11/03/2026
By Ishwar I. Chanda
Miami-Dade Product Control

Revision: ADDED 4–1/4" RISER.

PREPARED BY A. LYNN MILLER
1070 TECHNOLOGY DRIVE
N. VENICE, FL 34275
(941) 480-1600
REGISTRATION #29296

WINDOOR® INCORPORATED
WINDOOR INCORPORATED
104 TRIPLE DIAMOND BLVD.
NORTH VENICE, FL 34275
(833) 554-5432

Title	Desc.	Series	Sheet	DWG No.	Drawn By	Date	Rev.
ALUMINUM SLIDING GLASS DOOR (LM)	DP CHARTS - REINF. 135 DEG	SGD8100A	15 OF 36	8100CORNER-NOA	ERIN KOSS	07/28/20	

ANTHONY LYNN MILLER
LICENSE
No. 58705
STATE OF FLORIDA
PROFESSIONAL ENGINEER
7/31/20

A. LYNN MILLER, P.E.
P.E.# 58705

90° REINFORCED
GLAZING OPTIONS A, B, C & D
WOOD INSTALLATION

1-3/4" SILL RISER

Maximum Design Pressure Capacity Chart (psf)														
Frame Height (in)	Panel Width (in)													
	24.0		30.0		36.0		42.0		48.0		54.0		60.0	
	Pos	Neg	Pos	Neg	Pos	Neg	Pos	Neg	Pos	Neg	Pos	Neg	Pos	Neg
80.0	45.0	105.0	45.0	105.0	45.0	105.0	45.0	105.0	45.0	105.0	45.0	105.0	45.0	105.0
84.0	45.0	105.0	45.0	105.0	45.0	105.0	45.0	105.0	45.0	105.0	45.0	105.0	45.0	102.0
96.0	45.0	105.0	45.0	105.0	45.0	105.0	45.0	104.8	45.0	95.5	45.0	88.7	45.0	83.5
98.0	45.0	105.0	45.0	105.0	45.0	105.0	45.0	102.1	45.0	92.9	45.0	86.2	45.0	81.0
108.0	45.0	105.0	45.0	105.0	45.0	101.9	45.0	90.3	45.0	81.9	45.0	75.6	45.0	70.6
114.0	45.0	105.0	45.0	105.0	45.0	95.5	45.0	84.5	45.0	76.4	45.0	70.3	45.0	65.6
120.0	45.0	105.0	45.0	104.8	45.0	89.9	45.0	79.4	45.0	71.6	45.0	65.8	45.0	61.2
126.0	45.0	105.0	45.0	99.1	45.0	84.9	45.0	74.8	45.0	67.4	-	-	-	-
132.0	45.0	105.0	45.0	94.0	45.0	80.4	45.0	70.8	45.0	63.7	-	-	-	-
138.0	45.0	105.0	45.0	89.4	45.0	76.4	45.0	67.2	45.0	60.3	-	-	-	-
144.0	45.0	104.2	45.0	85.3	45.0	72.8	45.0	63.9	45.0	57.3	-	-	-	-

3" SILL RISER

Maximum Design Pressure Capacity Chart (psf)														
Frame Height (in)	Panel Width (in)													
	24.0		30.0		36.0		42.0		48.0		54.0		60.0	
	Pos	Neg	Pos	Neg	Pos	Neg	Pos	Neg	Pos	Neg	Pos	Neg	Pos	Neg
80.0	80.0	105.0	80.0	105.0	80.0	105.0	80.0	105.0	80.0	105.0	80.0	105.0	80.0	105.0
84.0	80.0	105.0	80.0	105.0	80.0	105.0	80.0	105.0	80.0	105.0	80.0	105.0	80.0	102.0
96.0	80.0	105.0	80.0	105.0	80.0	105.0	80.0	104.8	80.0	95.5	80.0	88.7	80.0	83.5
98.0	80.0	105.0	80.0	105.0	80.0	105.0	80.0	102.1	80.0	92.9	80.0	86.2	80.0	81.0
108.0	80.0	105.0	80.0	105.0	80.0	101.9	80.0	90.3	80.0	81.9	75.6	75.6	70.6	70.6
114.0	80.0	105.0	80.0	105.0	80.0	95.5	80.0	84.5	76.4	76.4	70.3	70.3	65.6	65.6
120.0	80.0	105.0	80.0	104.8	80.0	89.9	79.4	79.4	71.6	71.6	65.8	65.8	61.2	61.2
126.0	80.0	105.0	80.0	99.1	80.0	84.9	74.8	74.8	67.4	67.4	-	-	-	-
132.0	80.0	105.0	80.0	94.0	80.0	80.4	70.8	70.8	63.7	63.7	-	-	-	-
138.0	80.0	105.0	80.0	89.4	76.4	76.4	67.2	67.2	60.3	60.3	-	-	-	-
144.0	80.0	104.2	80.0	85.3	72.8	72.8	63.9	63.9	57.3	57.3	-	-	-	-

2-1/4" SILL RISER

Maximum Design Pressure Capacity Chart (psf)														
Frame Height (in)	Panel Width (in)													
	24.0		30.0		36.0		42.0		48.0		54.0		60.0	
	Pos	Neg	Pos	Neg	Pos	Neg	Pos	Neg	Pos	Neg	Pos	Neg	Pos	Neg
80.0	60.0	105.0	60.0	105.0	60.0	105.0	60.0	105.0	60.0	105.0	60.0	105.0	60.0	105.0
84.0	60.0	105.0	60.0	105.0	60.0	105.0	60.0	105.0	60.0	105.0	60.0	105.0	60.0	102.0
96.0	60.0	105.0	60.0	105.0	60.0	105.0	60.0	104.8	60.0	95.5	60.0	88.7	60.0	83.5
98.0	60.0	105.0	60.0	105.0	60.0	105.0	60.0	102.1	60.0	92.9	60.0	86.2	60.0	81.0
108.0	60.0	105.0	60.0	105.0	60.0	101.9	60.0	90.3	60.0	81.9	60.0	75.6	60.0	70.6
114.0	60.0	105.0	60.0	105.0	60.0	95.5	60.0	84.5	60.0	76.4	60.0	70.3	60.0	65.6
120.0	60.0	105.0	60.0	104.8	60.0	89.9	60.0	79.4	60.0	71.6	60.0	65.8	60.0	61.2
126.0	60.0	105.0	60.0	99.1	60.0	84.9	60.0	74.8	60.0	67.4	-	-	-	-
132.0	60.0	105.0	60.0	94.0	60.0	80.4	60.0	70.8	60.0	63.7	-	-	-	-
138.0	60.0	105.0	60.0	89.4	60.0	76.4	60.0	67.2	60.0	60.3	-	-	-	-
144.0	60.0	104.2	60.0	85.3	60.0	72.8	60.0	63.9	57.3	57.3	-	-	-	-

3-1/2" & 4-1/4" SILL RISERS

Maximum Design Pressure Capacity Chart (psf)														
Frame Height (in)	Panel Width (in)													
	24.0		30.0		36.0		42.0		48.0		54.0		60.0	
	Pos	Neg	Pos	Neg	Pos	Neg	Pos	Neg	Pos	Neg	Pos	Neg	Pos	Neg
80.0	100.0	105.0	100.0	105.0	100.0	105.0	100.0	105.0	100.0	105.0	100.0	105.0	100.0	105.0
84.0	100.0	105.0	100.0	105.0	100.0	105.0	100.0	105.0	100.0	105.0	100.0	105.0	100.0	102.0
96.0	100.0	105.0	100.0	105.0	100.0	105.0	100.0	104.8	95.5	95.5	88.7	88.7	83.5	83.5
98.0	100.0	105.0	100.0	105.0	100.0	105.0	100.0	102.1	92.9	92.9	86.2	86.2	81.0	81.0
108.0	100.0	105.0	100.0	105.0	100.0	101.9	90.3	90.3	81.9	81.9	75.6	75.6	70.6	70.6
114.0	100.0	105.0	100.0	105.0	95.5	95.5	84.5	84.5	76.4	76.4	70.3	70.3	65.6	65.6
120.0	100.0	105.0	100.0	104.8	89.9	89.9	79.4	79.4	71.6	71.6	65.8	65.8	61.2	61.2
126.0	100.0	105.0	99.1	99.1	84.9	84.9	74.8	74.8	67.4	67.4	-	-	-	-
132.0	100.0	105.0	94.0	94.0	80.4	80.4	70.8	70.8	63.7	63.7	-	-	-	-
138.0	100.0	105.0	89.4	89.4	76.4	76.4	67.2	67.2	60.3	60.3	-	-	-	-
144.0	100.0	104.2	85.3	85.3	72.8	72.8	63.9	63.9	57.3	57.3	-	-	-	-

PANEL HEIGHT AND D.L.O. FORMULA
PANEL HEIGHT = UNIT HEIGHT – 1 9/16"
MAXIMUM D.L.O. HEIGHT = PANEL HEIGHT – 9 1/2"
D.L.O. WIDTH = NOMINAL PANEL WIDTH – 9 1/2"

PRODUCT REVISED
as complying with the Florida Building Code
NOA-No. 20-0814.05
Expiration Date 11/03/2026
By Ishaq I. Chanda
Miami-Dade Product Control

Revision: ADDED 4–1/4" RISER.

PREPARED BY A. LYNN MILLER
1070 TECHNOLOGY DRIVE
N. VENICE, FL 34275
(941) 480-1600
REGISTRATION #29296

WINDOOR® INCORPORATED
WINDOOR INCORPORATED
104 TRIPLE DIAMOND BLVD.
NORTH VENICE, FL 34275
(833) 554-5432

Title: ALUMINUM SLIDING GLASS DOOR (LM)
Date: 07/28/20
Drawn By: ERIN KOSS
Rev.
Desc.: DP CHARTS - REINF. 90 DEG - WOOD
DWG No.: 8100CORNER-NOA
Series: SGD8100A
Sheet: 16 OF 36

ANTHONY LYNN MILLER
LICENSE
No. 58705
7/31/20
STATE OF FLORIDA
PROFESSIONAL ENGINEER

A. LYNN MILLER, P.E.
P.E.# 58705

135° REINFORCED
GLAZING OPTIONS A, B, C & D
WOOD INSTALLATION

1-3/4" SILL RISER

Maximum Design Pressure Capacity Chart (psf)														
Frame Height (in)	Panel Width (in)													
	24.0		30.0		36.0		42.0		48.0		54.0		60.0	
	Pos	Neg	Pos	Neg	Pos	Neg	Pos	Neg	Pos	Neg	Pos	Neg	Pos	Neg
80.0	45.0	105.0	45.0	105.0	45.0	105.0	45.0	105.0	45.0	105.0	45.0	105.0	45.0	105.0
84.0	45.0	105.0	45.0	105.0	45.0	105.0	45.0	105.0	45.0	105.0	45.0	105.0	45.0	102.0
96.0	45.0	105.0	45.0	105.0	45.0	105.0	45.0	104.8	45.0	95.5	45.0	88.7	45.0	83.5
98.0	45.0	105.0	45.0	105.0	45.0	105.0	45.0	102.1	45.0	92.9	45.0	86.2	45.0	81.0
108.0	45.0	105.0	45.0	105.0	45.0	101.9	45.0	90.3	45.0	81.9	45.0	75.6	45.0	70.6
114.0	45.0	105.0	45.0	105.0	45.0	95.5	45.0	84.5	45.0	76.4	45.0	70.3	45.0	65.6
120.0	45.0	105.0	45.0	104.8	45.0	89.9	45.0	79.4	45.0	71.6	45.0	65.8	45.0	61.2
126.0	45.0	105.0	45.0	99.1	45.0	84.9	45.0	74.8	45.0	67.4	-	-	-	-
132.0	45.0	105.0	45.0	94.0	45.0	80.4	45.0	70.8	45.0	63.7	-	-	-	-
138.0	45.0	105.0	45.0	89.4	45.0	76.4	45.0	67.2	45.0	60.3	-	-	-	-
144.0	45.0	104.2	45.0	85.3	45.0	72.8	45.0	63.9	45.0	57.3	-	-	-	-

3" SILL RISER

Maximum Design Pressure Capacity Chart (psf)														
Frame Height (in)	Panel Width (in)													
	24.0		30.0		36.0		42.0		48.0		54.0		60.0	
	Pos	Neg	Pos	Neg	Pos	Neg	Pos	Neg	Pos	Neg	Pos	Neg	Pos	Neg
80.0	80.0	105.0	80.0	105.0	80.0	105.0	80.0	105.0	80.0	105.0	80.0	105.0	80.0	105.0
84.0	80.0	105.0	80.0	105.0	80.0	105.0	80.0	105.0	80.0	105.0	80.0	105.0	80.0	102.0
96.0	80.0	105.0	80.0	105.0	80.0	105.0	80.0	104.8	80.0	95.5	80.0	88.7	80.0	83.5
98.0	80.0	105.0	80.0	105.0	80.0	105.0	80.0	102.1	80.0	92.9	80.0	86.2	80.0	81.0
108.0	80.0	105.0	80.0	105.0	80.0	101.9	80.0	90.3	80.0	81.9	75.6	75.6	70.6	70.6
114.0	80.0	105.0	80.0	105.0	80.0	95.5	80.0	84.5	76.4	76.4	70.3	70.3	65.5	65.6
120.0	80.0	105.0	80.0	104.8	80.0	89.9	79.4	79.4	71.6	71.6	65.8	65.8	61.2	61.2
126.0	80.0	105.0	80.0	99.1	80.0	84.9	74.8	74.8	67.4	67.4	-	-	-	-
132.0	80.0	105.0	80.0	94.0	80.0	80.4	70.8	70.8	63.7	63.7	-	-	-	-
138.0	80.0	105.0	80.0	89.4	76.4	76.4	67.2	67.2	60.3	60.3	-	-	-	-
144.0	80.0	104.2	80.0	85.3	72.8	72.8	63.9	63.9	57.3	57.3	-	-	-	-

2-1/4" SILL RISER

Maximum Design Pressure Capacity Chart (psf)														
Frame Height (in)	Panel Width (in)													
	24.0		30.0		36.0		42.0		48.0		54.0		60.0	
	Pos	Neg	Pos	Neg	Pos	Neg	Pos	Neg	Pos	Neg	Pos	Neg	Pos	Neg
80.0	60.0	105.0	60.0	105.0	60.0	105.0	60.0	105.0	60.0	105.0	60.0	105.0	60.0	105.0
84.0	60.0	105.0	60.0	105.0	60.0	105.0	60.0	105.0	60.0	105.0	60.0	105.0	60.0	102.0
96.0	60.0	105.0	60.0	105.0	60.0	105.0	60.0	104.8	60.0	95.5	60.0	88.7	60.0	83.5
98.0	60.0	105.0	60.0	105.0	60.0	105.0	60.0	102.1	60.0	92.9	60.0	86.2	60.0	81.0
108.0	60.0	105.0	60.0	105.0	60.0	101.9	60.0	90.3	60.0	81.9	60.0	75.6	60.0	70.6
114.0	60.0	105.0	60.0	105.0	60.0	95.5	60.0	84.5	60.0	76.4	60.0	70.3	60.0	65.6
120.0	60.0	105.0	60.0	104.8	60.0	89.9	60.0	79.4	60.0	71.6	60.0	65.8	60.0	61.2
126.0	60.0	105.0	60.0	99.1	60.0	84.9	60.0	74.8	60.0	67.4	-	-	-	-
132.0	60.0	105.0	60.0	94.0	60.0	80.4	60.0	70.8	60.0	63.7	-	-	-	-
138.0	60.0	105.0	60.0	89.4	60.0	76.4	60.0	67.2	60.0	60.3	-	-	-	-
144.0	60.0	104.2	60.0	85.3	60.0	72.8	60.0	63.9	57.3	57.3	-	-	-	-

3-1/2" & 4-1/4" SILL RISERS

Maximum Design Pressure Capacity Chart (psf)														
Frame Height (in)	Panel Width (in)													
	24.0		30.0		36.0		42.0		48.0		54.0		60.0	
	Pos	Neg	Pos	Neg	Pos	Neg	Pos	Neg	Pos	Neg	Pos	Neg	Pos	Neg
80.0	100.0	105.0	100.0	105.0	100.0	105.0	100.0	105.0	100.0	105.0	100.0	105.0	100.0	105.0
84.0	100.0	105.0	100.0	105.0	100.0	105.0	100.0	105.0	100.0	105.0	100.0	105.0	100.0	102.0
96.0	100.0	105.0	100.0	105.0	100.0	105.0	100.0	104.8	95.5	95.5	88.7	88.7	83.5	83.5
98.0	100.0	105.0	100.0	105.0	100.0	105.0	100.0	102.1	92.9	92.9	86.2	86.2	81.0	81.0
108.0	100.0	105.0	100.0	105.0	100.0	101.9	90.3	90.3	81.9	81.9	75.6	75.6	70.6	70.6
114.0	100.0	105.0	100.0	105.0	95.5	95.5	84.5	84.5	76.4	76.4	70.3	70.3	65.5	65.6
120.0	100.0	105.0	100.0	104.8	89.9	89.9	79.4	79.4	71.6	71.6	65.8	65.8	61.2	61.2
126.0	100.0	105.0	99.1	99.1	84.9	84.9	74.8	74.8	67.4	67.4	-	-	-	-
132.0	100.0	105.0	94.0	94.0	80.4	80.4	70.8	70.8	63.7	63.7	-	-	-	-
138.0	100.0	105.0	89.4	89.4	76.4	76.4	67.2	67.2	60.3	60.3	-	-	-	-
144.0	100.0	104.2	85.3	85.3	72.8	72.8	63.9	63.9	57.3	57.3	-	-	-	-

PANEL HEIGHT AND D.L.O. FORMULA
PANEL HEIGHT = UNIT HEIGHT – 1 9/16"
MAXIMUM D.L.O. HEIGHT = PANEL HEIGHT – 9 1/2"
D.L.O. WIDTH = NOMINAL PANEL WIDTH – 9 1/2"

PRODUCT REVISED
as complying with the Florida Building Code
NOA-No. 20-0814.05
Expiration Date 11/03/2026
By Ishaq I. Chanda
Miami-Dade Product Control

Revision: ADDED 4–1/4" RISER.

PREPARED BY A. LYNN MILLER
1070 TECHNOLOGY DRIVE
N. VENICE, FL 34275
(941) 480-1600
REGISTRATION #29296

Rev.	Date	Drawn By	DWG No.	Sheet
	07/28/20	ERIN KOSS	8100CORNER-NOA	17 OF 36

Series: SGD8100A
Desc.: DP CHARTS - REINF. 135 DEG - WOOD
Title: ALUMINUM SLIDING GLASS DOOR (LM)

WINDOOR® INCORPORATED
WINDOOR INCORPORATED
104 TRIPLE DIAMOND BLVD.
NORTH VENICE, FL 34275
(833) 554-5432

ANTHONY LYNN MILLER
LICENSE
No. 58705
STATE OF FLORIDA
PROFESSIONAL ENGINEER
7/31/20

A. LYNN MILLER, P.E.
P.E.# 58705

90° & 135° NON-REINFORCED
GLAZING OPTIONS A, B, C, D, E & F
WOOD, MASONRY/CONCRETE OR METAL INSTALLATION

90° - 1-3/4" SILL RISER

Maximum Design Pressure Capacity Chart (psf)

Frame Height (in)	Panel Width (in) 24.0		30.0		36.0		42.0		48.0		54.0		60.0	
	Pos	Neg	Pos	Neg	Pos	Neg	Pos	Neg	Pos	Neg	Pos	Neg	Pos	Neg
80.0	45.0	75.0	45.0	75.0	45.0	75.0	45.0	75.0	45.0	75.0	45.0	75.0	45.0	75.0
84.0	45.0	75.0	45.0	75.0	45.0	75.0	45.0	75.0	45.0	75.0	45.0	75.0	45.0	75.0
96.0	45.0	75.0	45.0	75.0	45.0	75.0	45.0	75.0	45.0	75.0	45.0	72.5	45.0	68.2
98.0	45.0	75.0	45.0	75.0	45.0	75.0	45.0	75.0	45.0	72.1	45.0	66.7	45.0	62.5
108.0	45.0	75.0	45.0	75.0	45.0	75.0	45.0	73.9	45.0	67.0	45.0	61.7	45.0	57.7
114.0	45.0	75.0	45.0	75.0	45.0	75.0	45.0	69.1	45.0	62.5	45.0	57.5	45.0	53.6
120.0	45.0	75.0	45.0	75.0	45.0	73.5	45.0	64.9	45.0	58.6	45.0	53.8	45.0	50.0

135° - 1-3/4" SILL RISER

Maximum Design Pressure Capacity Chart (psf)

Frame Height (in)	Panel Width (in) 24.0		30.0		36.0		42.0		48.0		54.0		60.0	
	Pos	Neg	Pos	Neg	Pos	Neg	Pos	Neg	Pos	Neg	Pos	Neg	Pos	Neg
80.0	45.0	75.0	45.0	75.0	45.0	75.0	45.0	75.0	45.0	75.0	45.0	75.0	45.0	75.0
84.0	45.0	75.0	45.0	75.0	45.0	75.0	45.0	75.0	45.0	75.0	45.0	75.0	45.0	75.0
96.0	45.0	75.0	45.0	75.0	45.0	75.0	45.0	75.0	45.0	75.0	45.0	72.5	45.0	68.2
98.0	45.0	75.0	45.0	75.0	45.0	75.0	45.0	75.0	45.0	72.1	45.0	66.7	45.0	62.5
108.0	45.0	75.0	45.0	75.0	45.0	75.0	45.0	73.9	45.0	67.0	45.0	61.7	45.0	57.7
114.0	45.0	75.0	45.0	75.0	45.0	75.0	45.0	69.1	45.0	62.5	45.0	57.5	45.0	53.6
120.0	45.0	75.0	45.0	75.0	45.0	73.5	45.0	64.9	45.0	58.6	45.0	53.8	45.0	50.0

90° - 2-1/4" SILL RISER

Maximum Design Pressure Capacity Chart (psf)

Frame Height (in)	Panel Width (in) 24.0		30.0		36.0		42.0		48.0		54.0		60.0	
	Pos	Neg	Pos	Neg	Pos	Neg	Pos	Neg	Pos	Neg	Pos	Neg	Pos	Neg
80.0	60.0	75.0	60.0	75.0	60.0	75.0	60.0	75.0	60.0	75.0	60.0	75.0	60.0	75.0
84.0	60.0	75.0	60.0	75.0	60.0	75.0	60.0	75.0	60.0	75.0	60.0	75.0	60.0	75.0
96.0	60.0	75.0	60.0	75.0	60.0	75.0	60.0	75.0	60.0	75.0	60.0	72.5	60.0	68.2
98.0	60.0	75.0	60.0	75.0	60.0	75.0	60.0	75.0	60.0	72.1	60.0	66.7	60.0	62.5
108.0	60.0	75.0	60.0	75.0	60.0	75.0	60.0	73.9	60.0	67.0	60.0	61.7	57.7	57.7
114.0	60.0	75.0	60.0	75.0	60.0	75.0	60.0	69.1	60.0	62.5	57.5	57.5	53.6	53.6
120.0	60.0	75.0	60.0	75.0	60.0	73.5	60.0	64.9	58.6	58.6	53.8	53.8	50.0	50.0

135° - 2-1/4" SILL RISER

Maximum Design Pressure Capacity Chart (psf)

Frame Height (in)	Panel Width (in) 24.0		30.0		36.0		42.0		48.0		54.0		60.0	
	Pos	Neg	Pos	Neg	Pos	Neg	Pos	Neg	Pos	Neg	Pos	Neg	Pos	Neg
80.0	60.0	75.0	60.0	75.0	60.0	75.0	60.0	75.0	60.0	75.0	60.0	75.0	60.0	75.0
84.0	60.0	75.0	60.0	75.0	60.0	75.0	60.0	75.0	60.0	75.0	60.0	75.0	60.0	75.0
96.0	60.0	75.0	60.0	75.0	60.0	75.0	60.0	75.0	60.0	75.0	60.0	72.5	60.0	68.2
98.0	60.0	75.0	60.0	75.0	60.0	75.0	60.0	75.0	60.0	72.1	60.0	66.7	60.0	62.5
108.0	60.0	75.0	60.0	75.0	60.0	75.0	60.0	73.9	60.0	67.0	60.0	61.7	57.7	57.7
114.0	60.0	75.0	60.0	75.0	60.0	75.0	60.0	69.1	60.0	62.5	57.5	57.5	53.6	53.6
120.0	60.0	75.0	60.0	75.0	60.0	73.5	60.0	64.9	58.6	58.6	53.8	53.8	50.0	50.0

90° - 3", 3-1/2" & 4-1/4" SILL RISERS

Maximum Design Pressure Capacity Chart (psf)

Frame Height (in)	Panel Width (in) 24.0		30.0		36.0		42.0		48.0		54.0		60.0	
	Pos	Neg	Pos	Neg	Pos	Neg	Pos	Neg	Pos	Neg	Pos	Neg	Pos	Neg
80.0	75.0	75.0	75.0	75.0	75.0	75.0	75.0	75.0	75.0	75.0	75.0	75.0	75.0	75.0
84.0	75.0	75.0	75.0	75.0	75.0	75.0	75.0	75.0	75.0	75.0	75.0	75.0	75.0	75.0
96.0	75.0	75.0	75.0	75.0	75.0	75.0	75.0	75.0	75.0	75.0	72.5	72.5	68.2	68.2
98.0	75.0	75.0	75.0	75.0	75.0	75.0	75.0	75.0	72.1	72.1	66.7	66.7	62.5	62.5
108.0	75.0	75.0	75.0	75.0	75.0	75.0	73.9	73.9	67.0	67.0	61.7	61.7	57.7	57.7
114.0	75.0	75.0	75.0	75.0	75.0	75.0	69.1	69.1	62.5	62.5	57.5	57.5	53.6	53.6
120.0	75.0	75.0	75.0	75.0	73.5	73.5	64.9	64.9	58.6	58.6	53.8	53.8	50.0	50.0

135° - 3", 3-1/2" & 4-1/4" SILL RISERS

Maximum Design Pressure Capacity Chart (psf)

Frame Height (in)	Panel Width (in) 24.0		30.0		36.0		42.0		48.0		54.0		60.0	
	Pos	Neg	Pos	Neg	Pos	Neg	Pos	Neg	Pos	Neg	Pos	Neg	Pos	Neg
80.0	75.0	75.0	75.0	75.0	75.0	75.0	75.0	75.0	75.0	75.0	75.0	75.0	75.0	75.0
84.0	75.0	75.0	75.0	75.0	75.0	75.0	75.0	75.0	75.0	75.0	75.0	75.0	75.0	75.0
96.0	75.0	75.0	75.0	75.0	75.0	75.0	75.0	75.0	75.0	75.0	72.5	72.5	68.2	68.2
98.0	75.0	75.0	75.0	75.0	75.0	75.0	75.0	75.0	72.1	72.1	66.7	66.7	62.5	62.5
108.0	75.0	75.0	75.0	75.0	75.0	75.0	73.9	73.9	67.0	67.0	61.7	61.7	57.7	57.7
114.0	75.0	75.0	75.0	75.0	75.0	75.0	69.1	69.1	62.5	62.5	57.5	57.5	53.6	53.6
120.0	75.0	75.0	75.0	75.0	73.5	73.5	64.9	64.9	58.6	58.6	53.8	53.8	50.0	50.0

PANEL HEIGHT AND D.L.O. FORMULA
PANEL HEIGHT = UNIT HEIGHT – 1 9/16"
MAXIMUM D.L.O. HEIGHT = PANEL HEIGHT – 9 1/2"
D.L.O. WIDTH = NOMINAL PANEL WIDTH – 9 1/2"

PRODUCT REVISED
as complying with the Florida Building Code
NOA-No. 20-0814.05
Expiration Date 11/03/2026
By Ishaq I. Chanda
Miami-Dade Product Control

Revision: ADDED 3-1/2" & 4-1/4" RISERS.

PREPARED BY A. LYNN MILLER
1070 TECHNOLOGY DRIVE
N. VENICE, FL 34275
(941) 480-1600
REGISTRATION #29296

Date: 07/28/20
Drawn By: ERIN KOSS
Rev.
DWG No.: 8100CORNER-NOA
Sheet: 18 OF 36

WINDOOR® INCORPORATED

WINDOOR INCORPORATED
104 TRIPLE DIAMOND BLVD.
NORTH VENICE, FL 34275
(833) 554-5432

Title: ALUMINUM SLIDING GLASS DOOR (LM)
Desc.: DP CHARTS - NON-REINF.
Series: SGD8100A

ANTHONY LYNN MILLER
LICENSE
No. 58705
STATE OF FLORIDA
PROFESSIONAL ENGINEER
7/31/20

A. LYNN MILLER, P.E.
P.E.# 58705

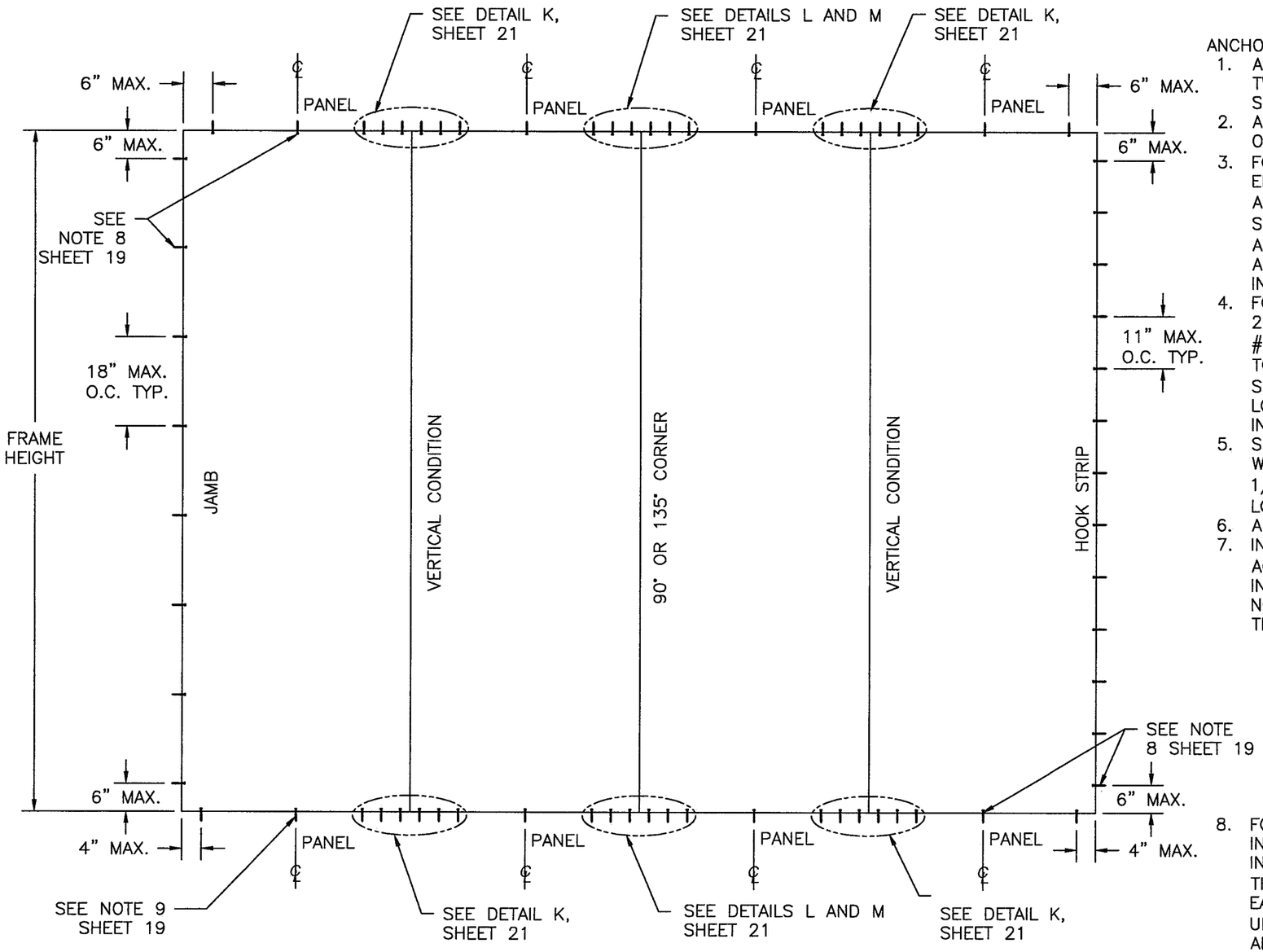

ANCHOR LAYOUT

4 PANEL UNIT SHOWN, APPLICABLE TO ALL CONFIGURATIONS.
SEE CHARTS SHEET 20 FOR NUMBER OF ANCHORS REQUIRED.

ANCHORING NOTES;

1. ALL FRAME SYSTEMS, 2, 3, 4 AND 5 TRACK, HAVE TWO ANCHORS AT EACH LOCATION SHOWN IN HEAD, SILL AND JAMBS.
2. ALL FRAME SYSTEMS, 2, 3, 4 AND 5 TRACK, HAVE ONE ANCHOR AT EACH LOCATION IN HOOK STRIP.
3. FOR ANCHORING INTO MASONRY/CONCRETE USE 1/4" ELCO CRETE–FLEX WITH SUFFICIENT LENGTH TO ACHIEVE A 1 1/4" MINIMUM EMBEDMENT INTO SUBSTRATE WITH 2 1/2" MINIMUM EDGE DISTANCE AND 2 3/16" MINIMUM SEPARATION. LOCATE ANCHORS AS SHOWN IN ELEVATIONS AND INSTALLATION DETAILS.
4. FOR ANCHORING INTO WOOD FRAMING, 2X BUCK OR 2X WOOD BACKED 20 GA. MINIMUM STEEL STUD USE #14 GRADE 5 WOOD SCREW WITH SUFFICIENT LENGTH TO ACHIEVE A 1 3/4" MINIMUM EMBEDMENT INTO SUBSTRATE WITH 1" MINIMUM EDGE DISTANCE. LOCATE ANCHORS AS SHOWN IN ELEVATIONS AND INSTALLATION DETAILS.
5. SHIM AS REQUIRED AT EACH INSTALLATION ANCHOR WITH LOAD BEARING SHIM. SHIM WHERE SPACE OF 1/16" OR GREATER OCCURS. MAXIMUM ALLOWABLE LOAD BEARING SHIM TO BE 1/4".
6. ALL FASTENERS TO BE CORROSION RESISTANT.
7. INSTALLATION ANCHORS SHALL BE INSTALLED IN ACCORDANCE WITH ANCHOR MANUFACTURER'S INSTALLATION INSTRUCTIONS, AND ANCHORS SHALL NOT BE USED IN SUBSTRATES WITH STRENGTHS LESS THAN THE MINIMUM STRENGTH SPECIFIED BELOW:
   A. WOOD – MINIMUM SPECIFIC GRAVITY OF G=0.42
   B. CONCRETE – MINIMUM COMPRESSIVE STRENGTH OF 2,700 PSI.
   C. MASONRY – STRENGTH CONFORMANCE TO ASTM C–90, GRADE N, TYPE 1 (OR GREATER).
   D. METAL FRAMING – 20 GA (.039) MINIMUM THICKNESS WITH 2X WOOD BACKING, Fy=33KSI/Fu=52KSI MINIMUM
8. FOR 2, 3 & 4 TRACK UNITS THERE ARE TWO (2) INSTALLATION ANCHORS AT EACH ANCHOR LOCATION IN HEAD, SILL AND JAMBS, FOR 5 TRACK UNITS THERE ARE THREE (3) INSTALLATION ANCHORS AT EACH LOCATION IN HEAD, SILL AND JAMBS. FOR ALL UNITS THERE IS ONLY ONE (1) INSTALLATION ANCHOR AT EACH ANCHOR LOCATION IN HOOK STRIP.
9. WHERE 2 OR MORE ANCHORS ARE REQUIRED AT HEAD/SILL ANCHORS SHALL BE EQUALLY SPACED.

PRODUCT REVISED
as complying with the Florida Building Code
NOA–No. 20-0814.05
Expiration Date 11/03/2026
By Ishaq I. Chanda
Miami–Dade Product Control

Revision: NO CHANGES THIS SHEET.

PREPARED BY A. LYNN MILLER
1070 TECHNOLOGY DRIVE
N. VENICE, FL 34275
(941) 480-1600
REGISTRATION #29296

Date: 07/28/20
Drawn By: ERIN KOSS
Rev.
DWG No.: 8100CORNER-NOA
Sheet: 19 OF 36

WINDOOR® INCORPORATED
WINDOOR INCORPORATED
104 TRIPLE DIAMOND BLVD.
NORTH VENICE, FL 34275
(833) 554-5432

Title: ALUMINUM SLIDING GLASS DOOR (LM)
Desc.: ANCHORING LAYOUT & NOTES
Series: SGD8100A

ANTHONY LYNN MILLER
LICENSE
No. 58705
STATE OF FLORIDA
PROFESSIONAL ENGINEER
7/31/20

A. LYNN MILLER, P.E.
P.E.# 58705

Number of Anchor Locations Required (Single)							
Frame Height (in)	Panel Width (in)						
	24.0	30.0	36.0	42.0	48.0	54.0	60.0
	Hook	Hook	Hook	Hook	Hook	Hook	Hook
80.0	8	8	8	8	8	8	8
84.0	8	8	8	8	8	8	8
96.0	9	9	9	9	9	9	9
98.0	9	9	9	9	9	9	9
108.0	10	10	10	10	10	10	10
114.0	11	11	11	11	11	11	11
120.0	11	11	11	11	11	11	11
126.0	12	12	12	12	12	-	-
132.0	12	12	12	12	12	-	-
138.0	13	13	13	13	13	-	-
144.0	13	13	13	13	13	-	-

Number of Anchor Locations Required (Pairs for 2T, 3T & 4T; 3 per Location for 5T)																							
Frame Height (in)	Panel Width (in)																						
	24.0			30.0			36.0			42.0			48.0			54.0			60.0				
	Jamb	H&S	Cluster	Jamb	H&S	Cluster	Jamb	H&S	Cluster	Jamb	H&S	Cluster	Jamb	H&S	Cluster	Jamb	H&S	Cluster	Jamb	H&S	Cluster		
80.0	5	1	4	5	1	4	5	2	6	5	2	6	6	2	6	6	4	6	6	4	6		
84.0	5	1	4	5	1	4	5	2	6	6	2	6	6	2	6	6	3	6	6	4	6		
96.0	5	1	4	5	1	6	6	2	6	6	2	6	6	2	6	6	3	6	6	3	6		
98.0	6	1	4	6	1	6	6	2	6	6	2	6	6	2	6	6	3	6	6	3	6		
108.0	6	1	6	6	1	6	6	2	6	6	2	6	6	2	6	6	2	6	6	3	6		
114.0	6	1	6	6	1	6	6	2	6	6	2	6	6	2	6	6	2	6	6	3	6		
120.0	7	1	6	7	1	6	7	2	6	7	2	6	7	2	6	7	2	6	7	2	6		
126.0	7	1	6	7	1	6	7	1	6	7	2	6	7	2	6	-	-	-	-	-	-		
132.0	7	1	6	7	1	6	7	1	6	7	2	6	7	2	6	-	-	-	-	-	-		
138.0	7	1	6	7	1	6	7	1	6	7	2	6	7	2	6	-	-	-	-	-	-		
144.0	8	1	6	8	1	6	8	1	6	8	2	6	8	2	6	-	-	-	-	-	-		

PRODUCT REVISED
as complying with the Florida Building Code
NOA-No. 20-0814.05
Expiration Date 11/03/2026
By Ishaq I. Chanda
Miami-Dade Product Control

Revision: NO CHANGES THIS SHEET.

PREPARED BY A. LYNN MILLER
1070 TECHNOLOGY DRIVE
N. VENICE, FL 34275
(941) 480-1600
REGISTRATION #29296

WINDOOR INCORPORATED
104 TRIPLE DIAMOND BLVD.
NORTH VENICE, FL 34275
(833) 554-5432

WINDOOR® INCORPORATED

Title: ALUMINUM SLIDING GLASS DOOR (LM)
Date: 07/28/20
Drawn By: ERIN KOSS
Desc: ANCHOR CHARTS
DWG No.: 8100CORNER-NOA
Rev.:
Sheet: 20 OF 36
Series: SGD8100A

ANTHONY LYNN MILLER
LICENSE
No. 58705
STATE OF FLORIDA
PROFESSIONAL ENGINEER
7/31/20

A. LYNN MILLER, P.E.
P.E.# 58705

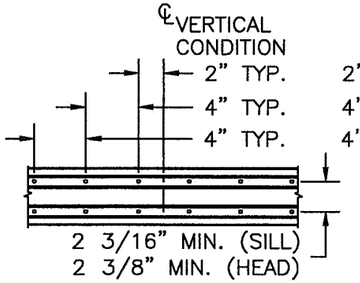

DETAIL K
2 TRACK UNIT

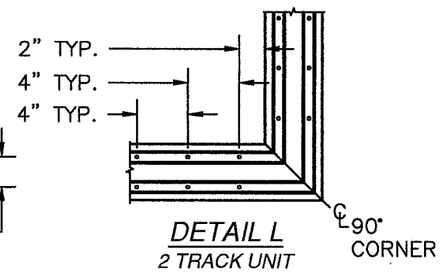

DETAIL L
2 TRACK UNIT

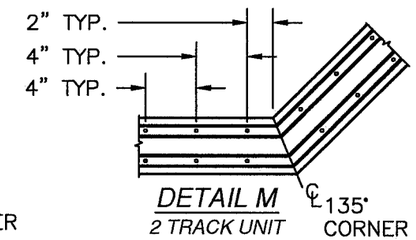

DETAIL M
2 TRACK UNIT

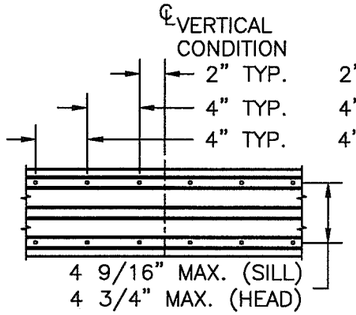

DETAIL K
3 TRACK UNIT

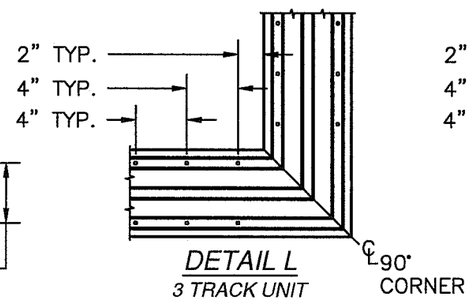

DETAIL L
3 TRACK UNIT

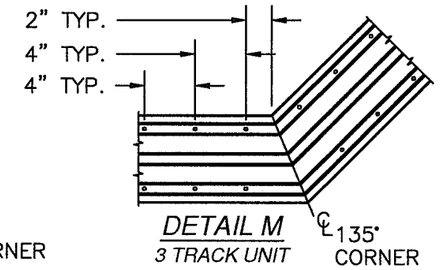

DETAIL M
3 TRACK UNIT

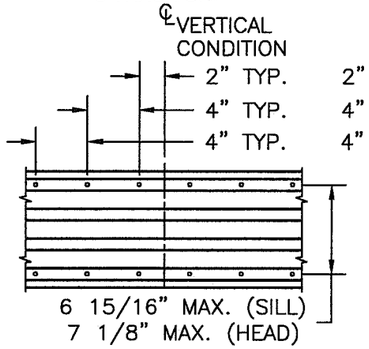

DETAIL K
4 TRACK UNIT

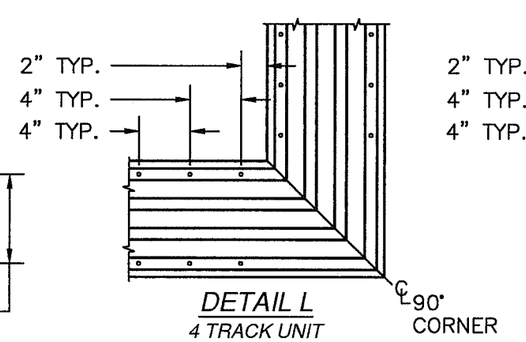

DETAIL L
4 TRACK UNIT

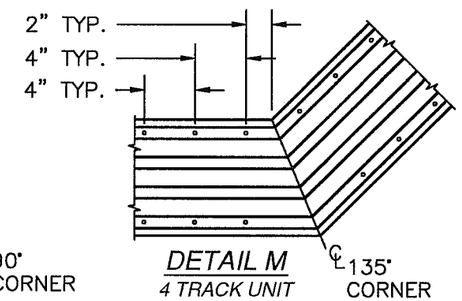

DETAIL M
4 TRACK UNIT

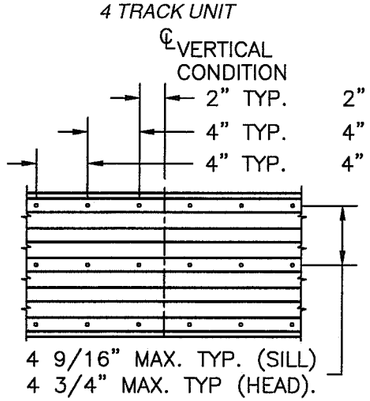

DETAIL K
5 TRACK UNIT

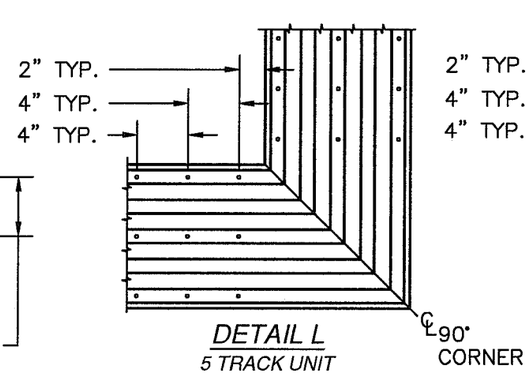

DETAIL L
5 TRACK UNIT

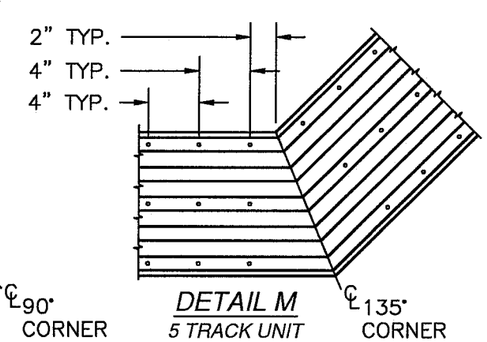

DETAIL M
5 TRACK UNIT

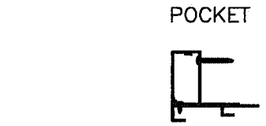

HOOKSTRIP ANCHOR LOCATION

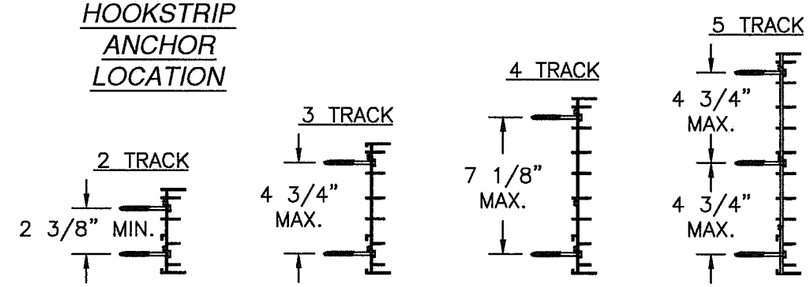

JAMB ANCHOR LOCATIONS

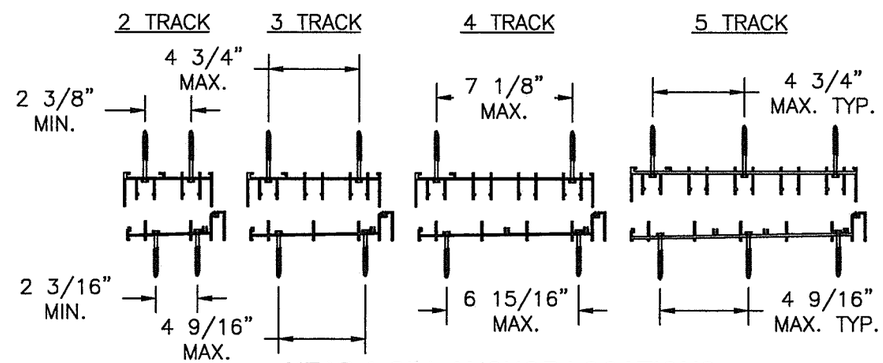

HEAD & SILL ANCHOR LOCATIONS

PANEL CONSTRUCTION:
ALL PANELS ARE CONSTRUCTED FROM EXTRUDED 6063–T6 ALUMINUM. VERTICAL STILES ARE NOTCHED TO RECEIVE HORIZONTAL RAILS. EACH RAIL IS SECURED TO STILES WITH (3) #10 x 1 1/4" SQ. DRIVE SCREW AT EACH END, ITEM #63. ALL PANELS HAVE AN INTERIOR AND EXTERIOR
APPLIED GLAZING STOP.

FRAME CONSTRUCTION:
EACH FRAME CORNER IS NOTCHED AND BUTTED. HEAD AND SILL ARE SECURED TO JAMBS WITH #7 TYPE A SS SCREW, ITEM #64, (2) AT EACH CORNER ON 2 TRACK, (2) AT 3 TRACK FRAME AND (3) AT EACH CORNER ON 4 AND 5 TRACK FRAME.

EXTERIOR

PRODUCT REVISED
as complying with the Florida Building Code
NOA-No. 20-0814.05
Expiration Date 11/03/2026
By Ishwar I. Chandra
Miami-Dade Product Control

Revision: NO CHANGES THIS SHEET.

PREPARED BY A. LYNN MILLER
1070 TECHNOLOGY DRIVE
N. VENICE, FL 34275
(941) 480-1600
REGISTRATION #29296

WINDOOR® INCORPORATED
WINDOOR INCORPORATED
104 TRIPLE DIAMOND BLVD.
NORTH VENICE, FL 34275
(833) 554-5432

Series	Sheet	DWG No.	Drawn By	Date	Rev.
SGD8100A	21 OF 36	8100CORNER-NOA	ERIN KOSS	07/28/20	

Desc.: ANCHOR LOCATIONS & CLUSTERS
Title: ALUMINUM SLIDING GLASS DOOR (LM)

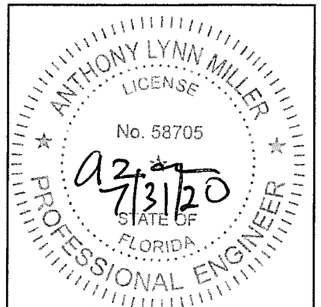

A. LYNN MILLER, P.E.
P.E.# 58705

BILL OF MATERIALS

ITEM NO.	PART #	DESCRIPTION	MANUF.	MATERIAL
1	FS-02068	2 TRACK FRAME HEAD	KEYMARK	ALUMINUM 6063-T6
2	FS-02067	2 TRACK FRAME JAMB	KEYMARK	ALUMINUM 6063-T6
3	S-44116	2 TRACK SILL PAN	KEYMARK	ALUMINUM 6063-T6
4	S-44122	2 TRACK SILL INSERT	KEYMARK	ALUMINUM 6063-T6
5	FS-02071	4 TRACK FRAME HEAD	KEYMARK	ALUMINUM 6063-T6
6	FS-02070	4 TRACK FRAME JAMB	KEYMARK	ALUMINUM 6063-T6
7	S-44118	4 TRACK SILL PAN	KEYMARK	ALUMINUM 6063-T6
8	S-44124	4 TRACK SILL INSERT	KEYMARK	ALUMINUM 6063-T6
9	FS-02180	3 TRACK FRAME HEAD	KEYMARK	ALUMINUM 6063-T6
10	FS-02181	3 TRACK FRAME JAMB	KEYMARK	ALUMINUM 6063-T6
11	S-44123	3 TRACK SILL PAN	KEYMARK	ALUMINUM 6063-T6
12	S-44117	3 TRACK SILL INSERT	KEYMARK	ALUMINUM 6063-T6
13	FS-01882	HEAD INSERT	KEYMARK	ALUMINUM 6063-T6
14	FS-01883	FRAME JAMB INSERT	KEYMARK	ALUMINUM 6063-T6
15	FH-01869	TOP RAIL	KEYMARK	ALUMINUM 6063-T6
16	FH-04723	BOTTOM RAIL	KEYMARK	ALUMINUM 6063-T6
17	FH-01871	LOCK STILE	KEYMARK	ALUMINUM 6063-T6
18	FH-05889	90° CORNER STILE	KEYMARK	ALUMINUM 6063-T6
19	FS-05890	90° CORNER CLIP	KEYMARK	ALUMINUM 6063-T6
20	FH-04767	FEMALE BUTT STILE EXT. OFFSET	KEYMARK	ALUMINUM 6063-T6
21	FH-04750	MALE BUTT STILE EXT. OFFSET	KEYMARK	ALUMINUM 6063-T6
22	FH-03916	BUTT STILE REINFORCEMENT	KEYMARK	ALUMINUM 6063-T6
23	FS-04754	PLAIN STILE INTERLOCK	KEYMARK	ALUMINUM 6063-T6
24	FS-04755	PLAIN STILE INTERLOCK COVER	KEYMARK	ALUMINUM 6063-T6
25	FS-04751	INTERLOCK COVER	KEYMARK	ALUMINUM 6063-T6
26	FS-02726	STILE JAMB INSERT	KEYMARK	ALUMINUM 6063-T6
27	FS-02726	PANEL STILE JAMB INSERT	KEYMARK	ALUMINUM 6063-T6
28	FH-01877	9/16" HORIZONTAL GLASS STOP	KEYMARK	ALUMINUM 6063-T6
29	FH-01878	9/16" VERTICAL GLASS STOP	KEYMARK	ALUMINUM 6063-T6
30	FS-01879	1" HORIZONTAL GLASS STOP	KEYMARK	ALUMINUM 6063-T6
31	FS-01880	1" VERTICAL GLASS STOP	KEYMARK	ALUMINUM 6063-T6
32	FS-03693	1 3/4" SILL RISER	KEYMARK	ALUMINUM 6063-T6
33	FS-03652	2 1/4" SILL RISER	KEYMARK	ALUMINUM 6063-T6
34	FS-03653	3" SILL RISER	KEYMARK	ALUMINUM 6063-T6
35	FS-03654	3 1/2" SILL RISER	KEYMARK	ALUMINUM 6063-T6
36		LMI GLAZING SEE SHEET 22		
37	FS-03684	POCKET DOOR HOOK STRIP	KEYMARK	ALUMINUM 6063-T6
38	FS-04477	POCKET DOOR HOOK STRIP MOUNT	KEYMARK	ALUMINUM 6063-T6
39	FS-04476	POCKET DOOR HOOK STRIP COVER	KEYMARK	ALUMINUM 6063-T6
40	FH-05045	INTERLOCK REINFORCING BAR	KEYMARK	ALUMINUM 6063-T6
41	FH-02642	6000 BUTT STILE REINFORCING BAR	KEYMARK	ALUMINUM 6063-T6
42	FH-05479	90° & 135° CORNER STILE REINFOR.	KEYMARK	ALUMINUM 6063-T6

BILL OF MATERIALS CONTINUED ON SHEET 23

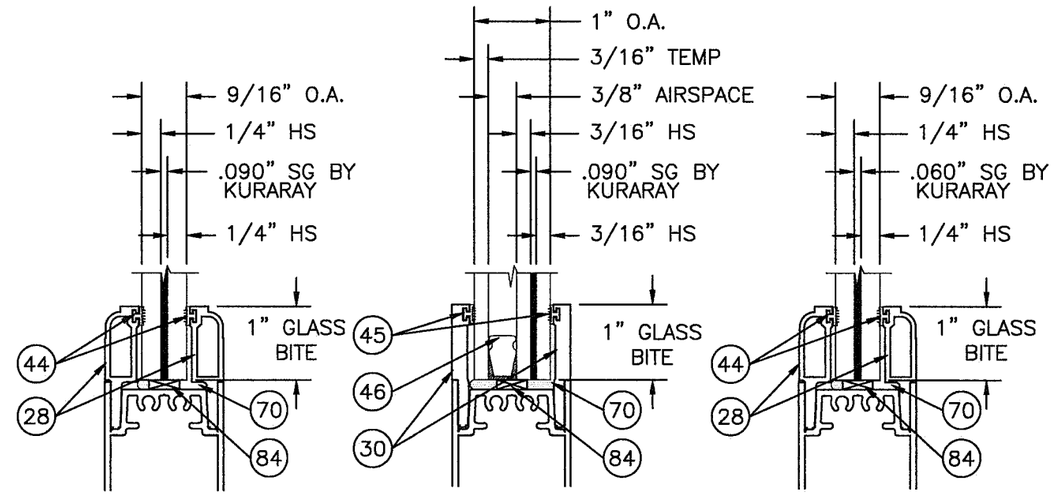

GLAZING OPTION A
REINFORCED & NON-REINFORCED

GLAZING OPTION C
REINFORCED & NON-REINFORCED

GLAZING OPTION E
NON-REINFORCED

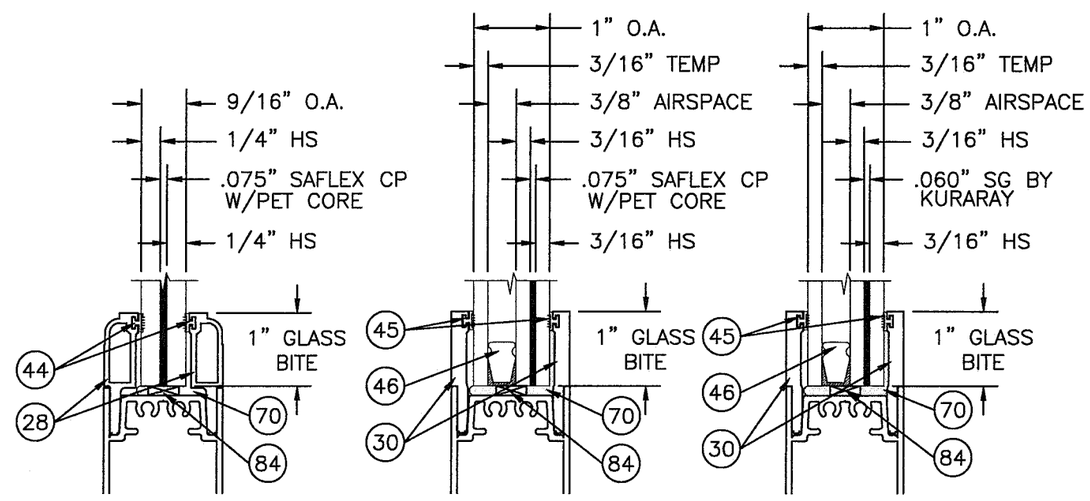

GLAZING OPTION B
REINFORCED & NON-REINFORCED

GLAZING OPTION D
REINFORCED & NON-REINFORCED

GLAZING OPTION F
NON-REINFORCED

EXTERIOR

PRODUCT REVISED
as complying with the Florida Building Code
NOA-No. 20-0814.05
Expiration Date 11/03/2026
By Ishwar I. Chanda
Miami-Dade Product Control

Revision: NO CHANGES THIS SHEET.

PREPARED BY A. LYNN MILLER
1070 TECHNOLOGY DRIVE
N. VENICE, FL 34275
(941) 480-1600
REGISTRATION #29296

WINDOOR® INCORPORATED
WINDOOR INCORPORATED
104 TRIPLE DIAMOND BLVD.
NORTH VENICE, FL 34275
(833) 554-5432

Title	Desc.	Series	Sheet	DWG No.	Drawn By	Date	Rev.
ALUMINUM SLIDING GLASS DOOR (LM)	BOM & GLAZING DETAILS	SGD8100A	22 OF 36	8100CORNER-NOA	ERIN KOSS	07/28/20	

ANTHONY LYNN MILLER
LICENSE
No. 58705
7/31/20
STATE OF FLORIDA
PROFESSIONAL ENGINEER

A. LYNN MILLER, P.E.
P.E.# 58705

BILL OF MATERIALS

ITEM NO.	PART #	DESCRIPTION	MANUF.	MATERIAL
43	FH-04747	BUMPER JAMB INSERT	KEYMARK	ALUMINUM 6063-T6
44	TP983	9/16" GLAZING VINYL		VINYL
45	TP1051	1" GLAZINK VINYL		VINYL
46	TP990	GLASS SPACER		ALUMINUM AW-3000
47	#1988-9000	TANDEM ROLLER		
48	7500 A04	SIGNATURE HANDLE SET		
49		SIGNATURE DUMMY HANDLE SET		
50	2468	DUAL POINT MORTISE LOCK & KEEPER		
51	TP876	INTERLOCK BUMPER		RUBBER
52	NPG	PANEL GUIDE		NYLON
53	NRAHP	PANEL ADJUST. HOLE PLUG		NYLON
54	W332417K0000	FINSEAL .187 x .350		
55	W231417K0000	FINSEAL .187 x .140		
56	W332217K0000	FINSEAL .187 x .220		
57	W131317K0000	FINSEAL .187 x .130		
58	W333517K0000	FINSEAL .187 x .680		
59	P7569AM	DUST PAD 1.244" x .5" x 2.34"		
60	131018	#8 x 3/8" PH TYPE B		18-8 STAINLESS
61	131002	#8 x 1" PFH THREAD CUTTING		18-8 STAINLESS
62	131009	#10 x 3/4" FH TEK SCREW		18-8 STAINLESS
63	131004	#10 x 1 1/4" SQ. DRIVE TYPE F		410 STAINLESS
64	131020	#7 x 5/8" PH TYPE A		410 STAINLESS
65	131018	#10 x 2 1/2" TYPE F		18-8 STAINLESS
66	131010	#10 x 1/2" SCREW		18-8 STAINLESS
67	131011	#8 x 2" FH TEK SCREW		410 STAINLESS
68	131022	#8 x 3/4" PH TEK SCREW		410 STAINLESS
69	LCS068-N5	SILL GATE SNAP IN		NYLON
70		SIKA 552, DOW 791, DOW 983	SIKA/DOW	POLYURETHANE/SILICONE
71	715449	LOCK OPERATING GEAR (CORNER)	SIEGENIA	
72	896624	LOCK LINKAGE (CORNER)	SIEGENIA	
73	81H-01	KEEPERS (CORNER)	SELJAN	
74	FG0015011	SEALANT		SILICONE
75	FS-04766	TALL BOTTOM RAIL	KEYMARK	ALUMINUM 6063-T6
76	131055	#8 x 1/2" PFH TEK SCREW		STAINLESS STEEL
77	FH-05811	135° CORNER STILE	KEYMARK	ALUMINUM 6063-T6
78	FS-05821	135° CORNER CLIP	KEYMARK	ALUMINUM 6063-T6
79		#10 x 3/4" PH TEK SCREW		18-8 STAINLESS
80	T-32124	5 TRACK FRAME HEAD	KEYMARK	ALUMINUM 6063-T6
81	T-32123	5 TRACK FRAME JAMB	KEYMARK	ALUMINUM 6063-T6
82	T-32122	5 TRACK SILL PAN	KEYMARK	ALUMINUM 6063-T6
83	T-32125	5 TRACK SILL INSERT	KEYMARK	ALUMINUM 6063-T6
84		SETTING BLOCK	FRANK LOWE	RUBBER 80-85 DUROMETER
85	FH-03655	4 1/4" SILL RISER	KEYMARK	ALUMINUM 6063-T6

BILL OF MATERIALS CONTINUED FROM SHEET 22

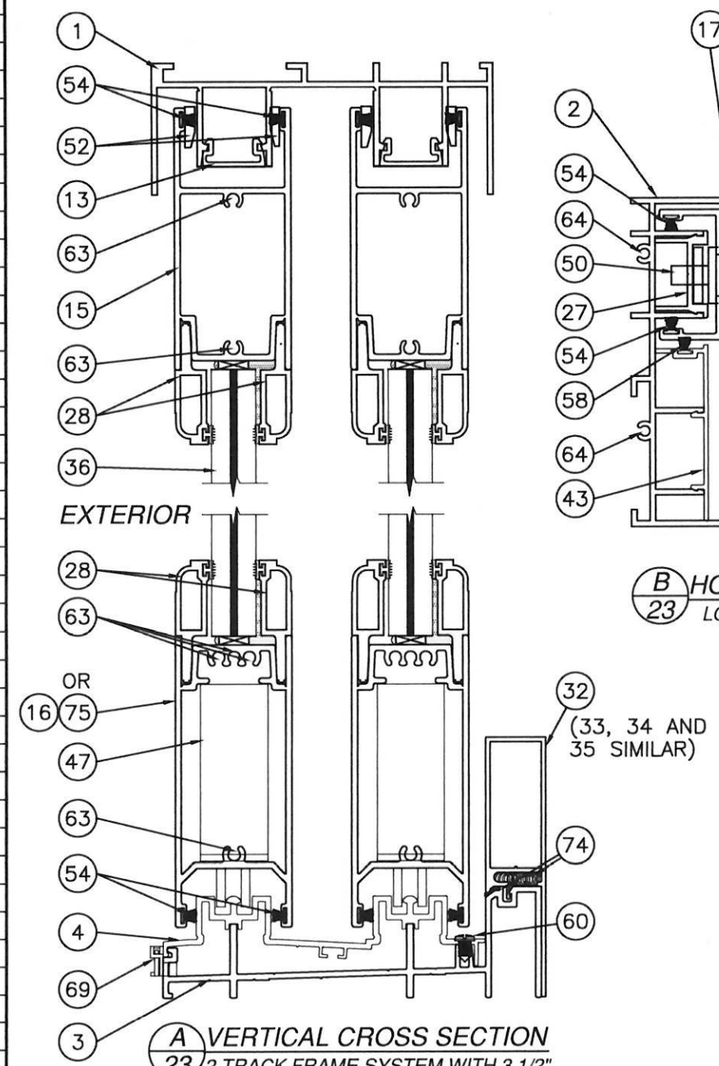

A/23 VERTICAL CROSS SECTION
2 TRACK FRAME SYSTEM WITH 3 1/2" SILL RISER SHOWN, ALL SILL RISERS MAY BE USED (SEE DESIGN PRESSURE CHARTS SHEET 14 THROUGH 18)

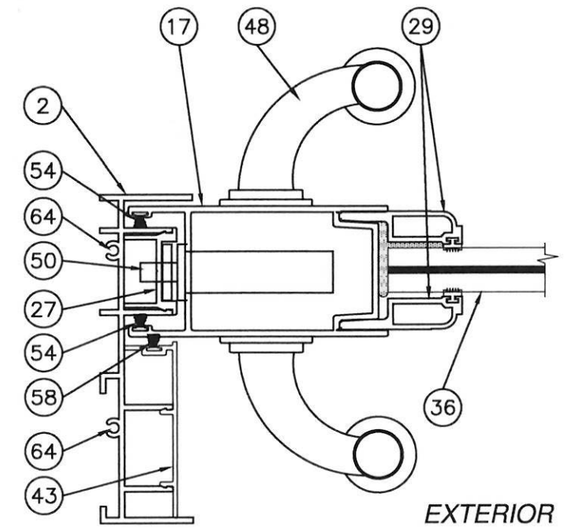

B/23 HORIZONTAL CROSS SECTION
LOCK STILE TO 2 TRACK FRAME JAMB

PRODUCT REVISED
as complying with the Florida Building Code
NOA-No. 20-0814.05
Expiration Date 11/03/2026
By Ishaq I. Chanda
Miami-Dade Product Control

Revision: ADDED DOW 791 & DOW 983 & 4-1/4" RISER TO BOM.

WINDOOR® INCORPORATED
WINDOOR INCORPORATED
104 TRIPLE DIAMOND BLVD.
NORTH VENICE, FL 34275
(833) 554-5432

PREPARED BY A. LYNN MILLER
1070 TECHNOLOGY DRIVE
N. VENICE, FL 34275
(941) 480-1600
REGISTRATION #29296

Title: ALUMINUM SLIDING GLASS DOOR (LM)
Desc.: BOM CONT. & SECTION VIEWS
Series: SGD8100A
Sheet: 23 OF 36
DWG No.: 8100CORNER-NOA
Drawn By: ERIN KOSS
Date: 07/28/20
Rev.:

ANTHONY LYNN MILLER
LICENSE
No. 58705
STATE OF FLORIDA
PROFESSIONAL ENGINEER
7/31/20

A. LYNN MILLER, P.E.
P.E.# 58705

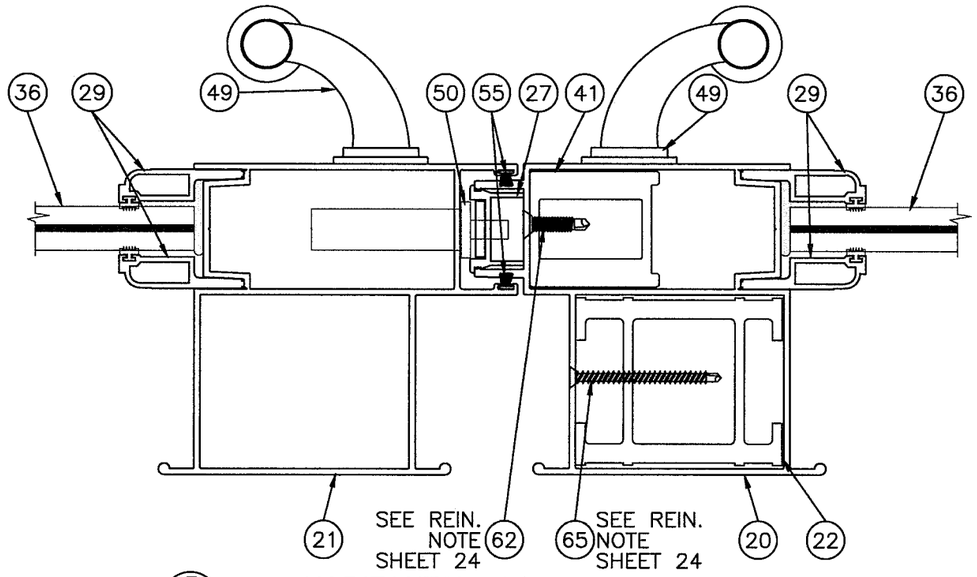

D/24 HORIZONTAL CROSS SECTION
MALE BUTT STILE TO REINFORCED FEMALE BUTT STILE

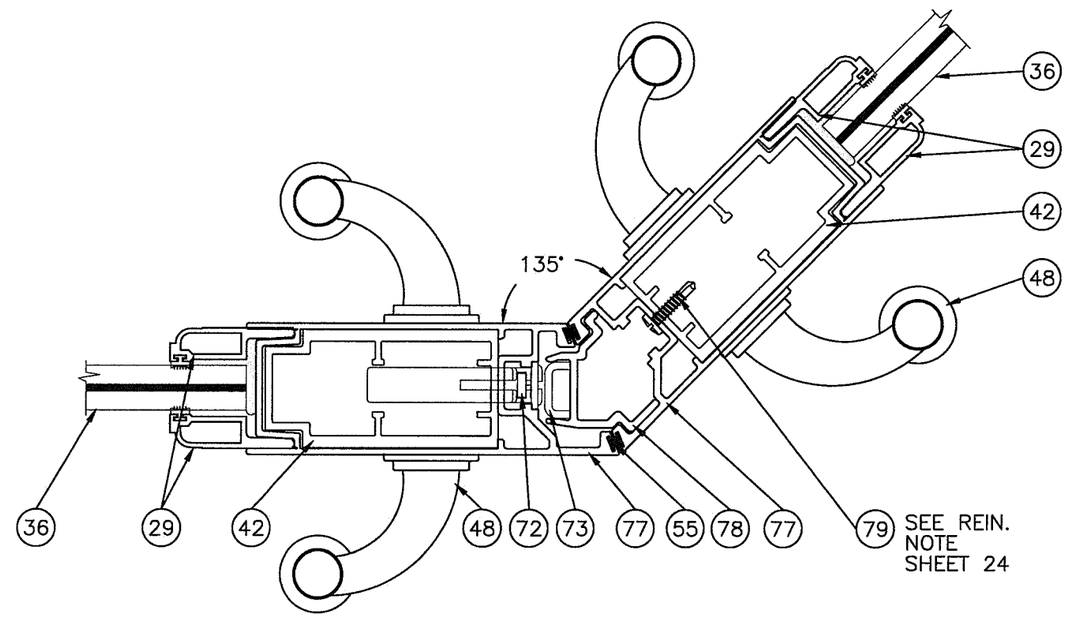

J/24 HORIZONTAL CROSS SECTION
REINFORCED 135° CORNER STILE

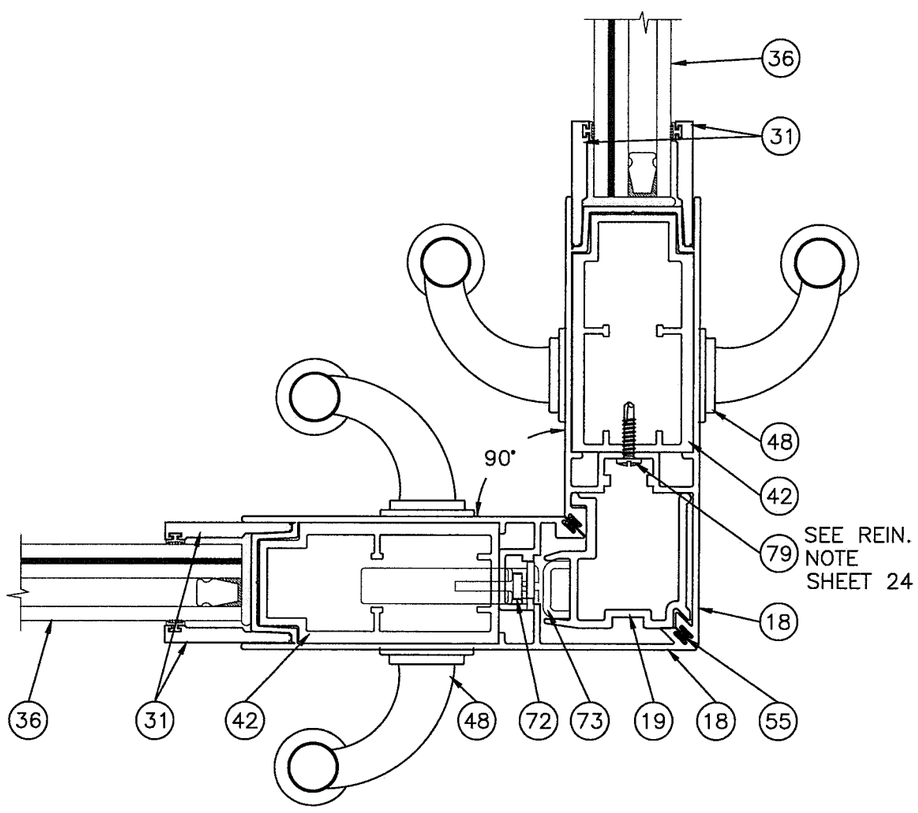

E/24 HORIZONTAL CROSS SECTION
REINFORCED 90° CORNER STILE

REINFORCING BAR NOTES:

- ITEM #40, (INTERLOCK REINFORCING BAR) IS SECURED TO INTERLOCK WITH ITEM #62 SEE DETAILS C/27 AND F/27.
- ITEM #22, (FEMALE BUTT STILE REINFORCING BAR) IS SECURED TO FEMALE BUTT STILE OFFSET WITH ITEM #65 SEE DETAIL D/24.
- ITEM #41, (6000 BUTT STILE REINFORCING BAR) IS SECURED TO FEMALE BUTT STILE OFFSET WITH ITEM #62 SEE DETAIL D/24.
- ITEM #42 (CORNER STILE REINFORCING BAR) IS SECURED TO CORNER STILE WITH ITEM #79 SEE DETAIL E/24.
- ALL SCREWS ARE SPACED 6" FROM TOP AND BOTTOM OF STILES AND ONE AT MIDSPAN.

EXTERIOR

PRODUCT REVISED
as complying with the Florida Building Code
NOA-No. 20-0814.05
Expiration Date 11/03/2026
By Ishaq I. Chanda
Miami-Dade Product Control

Revision: NO CHANGES THIS SHEET.

WINDOOR® INCORPORATED
WINDOOR INCORPORATED
104 TRIPLE DIAMOND BLVD.
NORTH VENICE, FL 34275
(833) 554-5432

PREPARED BY A. LYNN MILLER
1070 TECHNOLOGY DRIVE
N. VENICE, FL 34275
(941) 480-1600
REGISTRATION #29296

Series	Desc.	Sheet	DWG No.	Drawn By	Date	Rev.
SGD8100A	SECTION VIEWS	24 OF 36	8100CORNER-NOA	ERIN KOSS	07/28/20	

Title: ALUMINUM SLIDING GLASS DOOR (LM)

ANTHONY LYNN MILLER
LICENSE
No. 58705
STATE OF FLORIDA
PROFESSIONAL ENGINEER
7/31/20

A. LYNN MILLER, P.E.
P.E.# 58705

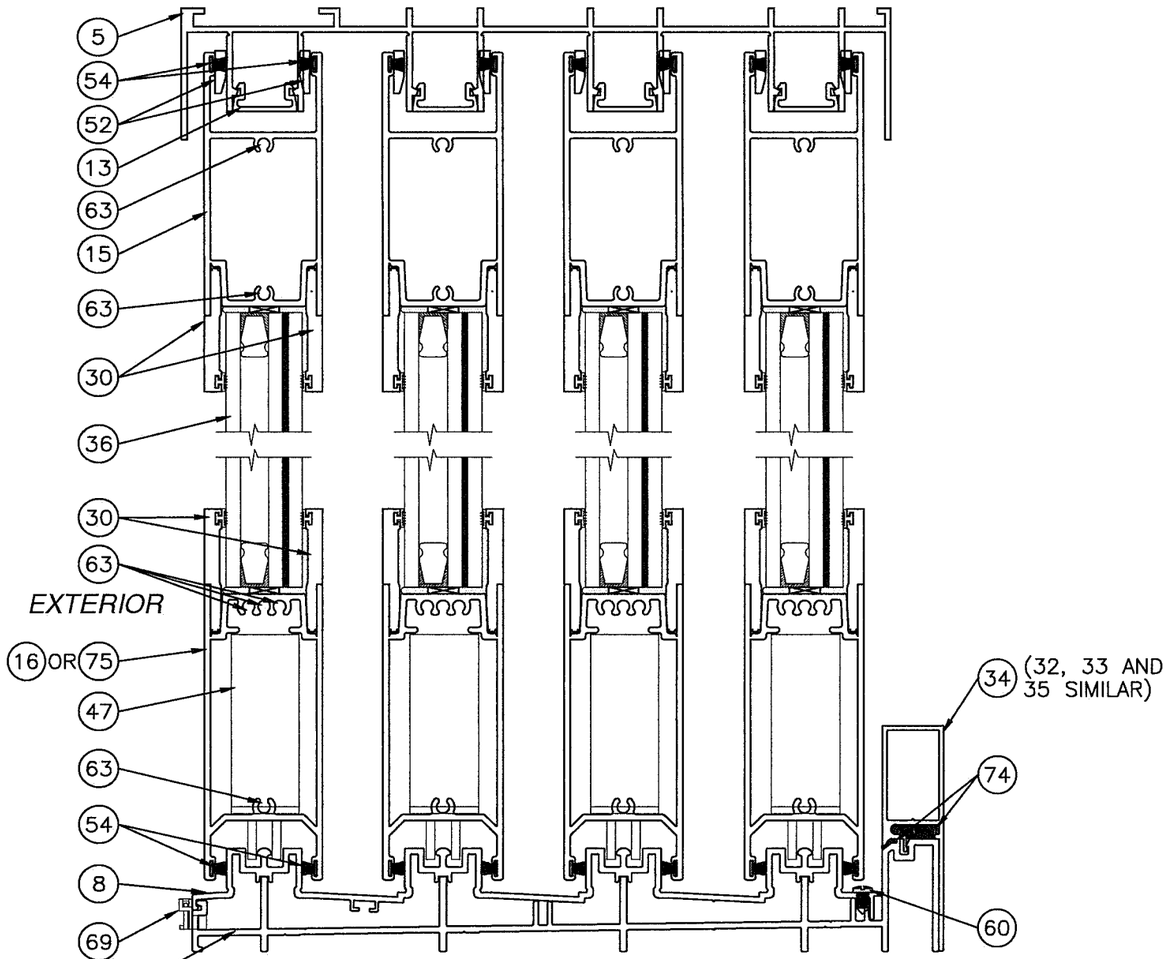

H/25 VERTICAL CROSS SECTION
4 TRACK FRAME SYSTEM WITH 3" SILL RISER SHOWN, OTHER SILL RISERS SIMILAR

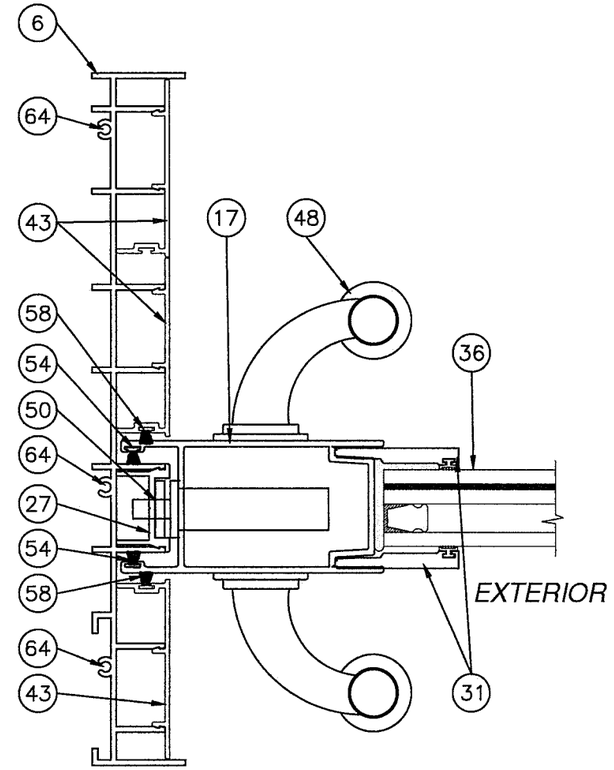

I/25 HORIZONTAL CROSS SECTION
LOCK STILE TO 4 TRACK FRAME JAMB

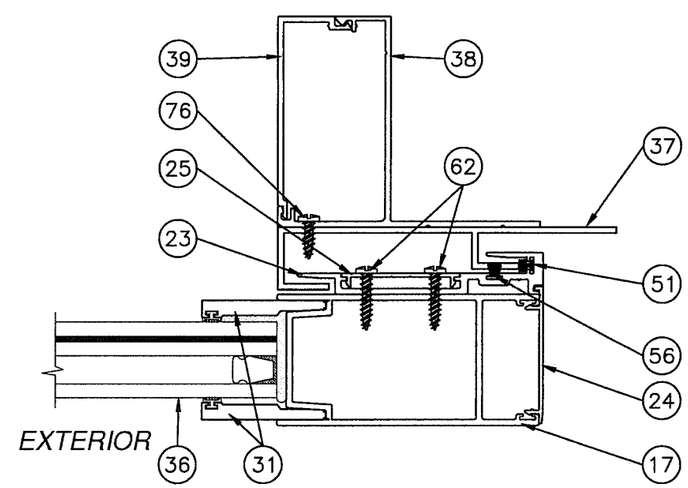

G/25 HORIZONTAL CROSS SECTION
INTERLOCK TO HOOK STRIP

PRODUCT REVISED
as complying with the Florida Building Code
NOA-No. 20-0814.05
Expiration Date 11/03/2026
By Ishaq I. Chanda
Miami-Dade Product Control

Revision: NO CHANGES THIS SHEET.

WINDOOR® INCORPORATED
WINDOOR INCORPORATED
104 TRIPLE DIAMOND BLVD.
NORTH VENICE, FL 34275
(833) 554-5432

PREPARED BY A. LYNN MILLER
1070 TECHNOLOGY DRIVE
N. VENICE, FL 34275
(941) 480-1600
REGISTRATION #29296

Series	Desc.	Title	Sheet	DWG No.	Drawn By	Date	Rev.
SGD8100A	SECTION VIEWS	ALUMINUM SLIDING GLASS DOOR (LM)	25 OF 36	8100CORNER-NOA	ERIN KOSS	07/28/20	

ANTHONY LYNN MILLER
LICENSE
No. 58705
STATE OF FLORIDA
PROFESSIONAL ENGINEER
7/31/20

A. LYNN MILLER, P.E.
P.E.# 58705

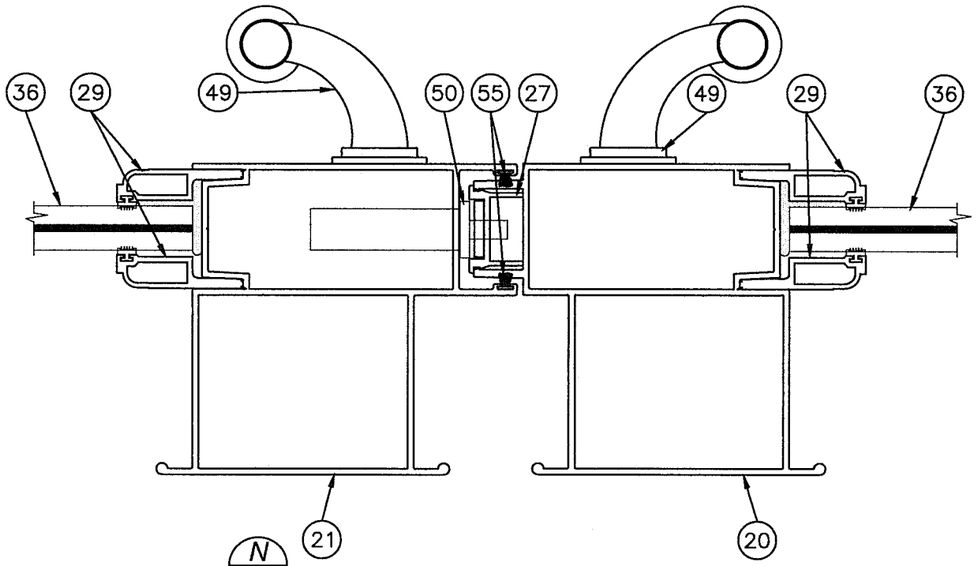

N/26 HORIZONTAL CROSS SECTION
MALE BUTT STILE TO NON-REINFORCED FEMALE BUTT STILE

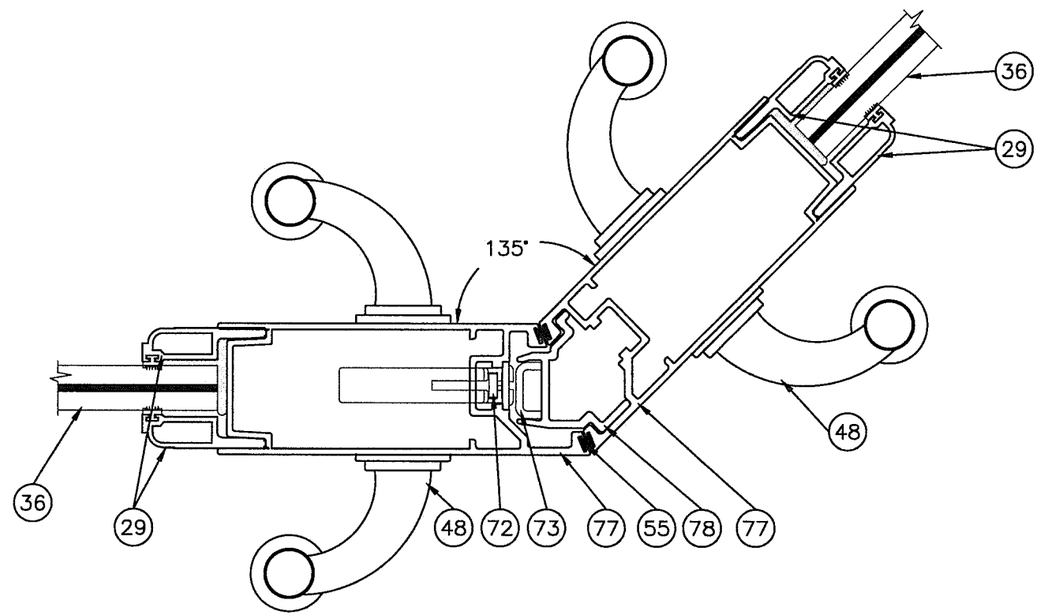

O/26 HORIZONTAL CROSS SECTION
NON-REINFORCED 135° CORNER STILE

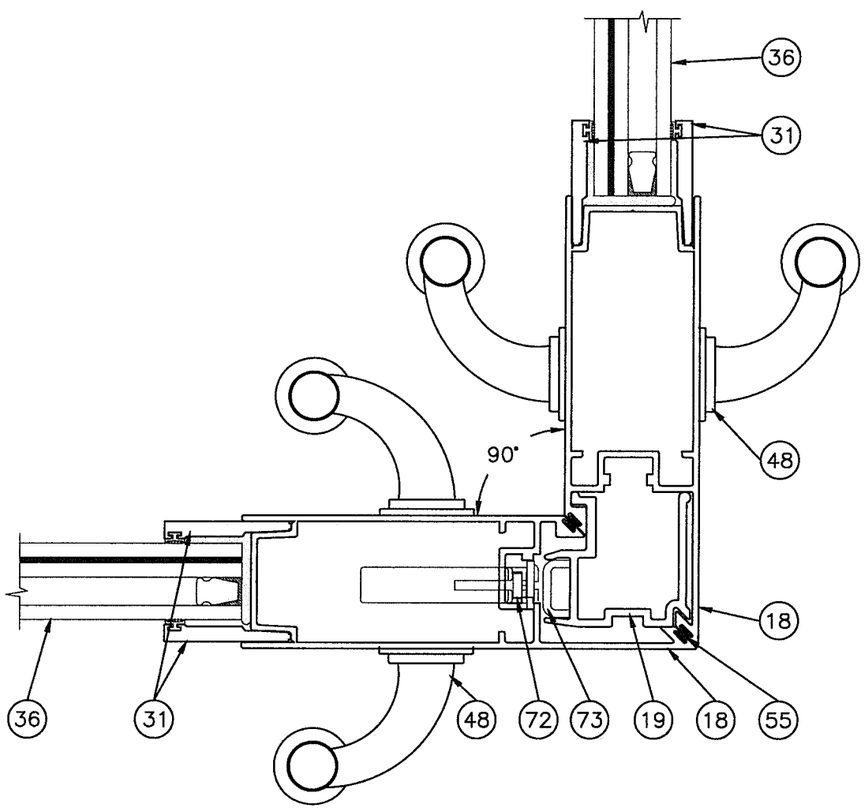

P/26 HORIZONTAL CROSS SECTION
NON-REINFORCED 90° CORNER STILE

EXTERIOR

PRODUCT REVISED
as complying with the Florida Building Code
NOA-No. 20-0814.05
Expiration Date 11/03/2026
By Ishwar I. Chanda
Miami-Dade Product Control

Revision: NO CHANGES THIS SHEET.

WINDOOR® INCORPORATED
WINDOOR INCORPORATED
104 TRIPLE DIAMOND BLVD.
NORTH VENICE, FL 34275
(833) 554-5432

PREPARED BY A. LYNN MILLER
1070 TECHNOLOGY DRIVE
N. VENICE, FL 34275
(941) 480-1600
REGISTRATION #29296

Series	Desc.	Title	Sheet	DWG No.	Drawn By	Date	Rev.
SGD8100A	SECTION VIEWS	ALUMINUM SLIDING GLASS DOOR (LM)	26 OF 36	8100CORNER-NOA	ERIN KOSS	07/28/20	

ANTHONY LYNN MILLER
LICENSE
No. 58705
7/31/20
STATE OF FLORIDA
PROFESSIONAL ENGINEER
A. LYNN MILLER, P.E.
P.E.# 58705

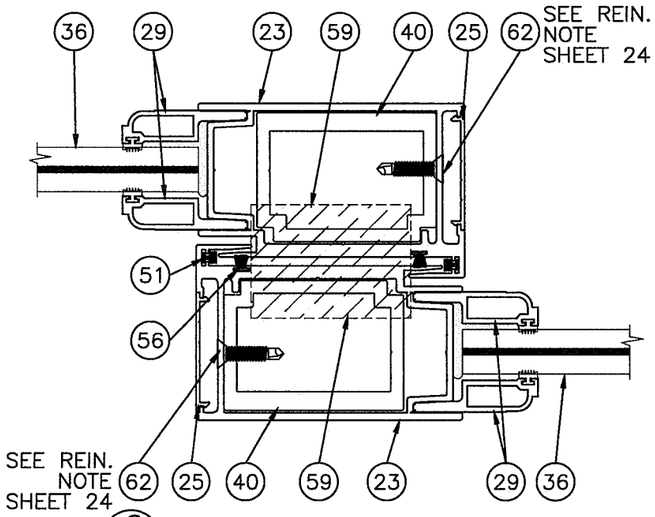

C/27 HORIZONTAL CROSS SECTION
REINFORCED INTERLOCK TO REINFORCED INTERLOCK

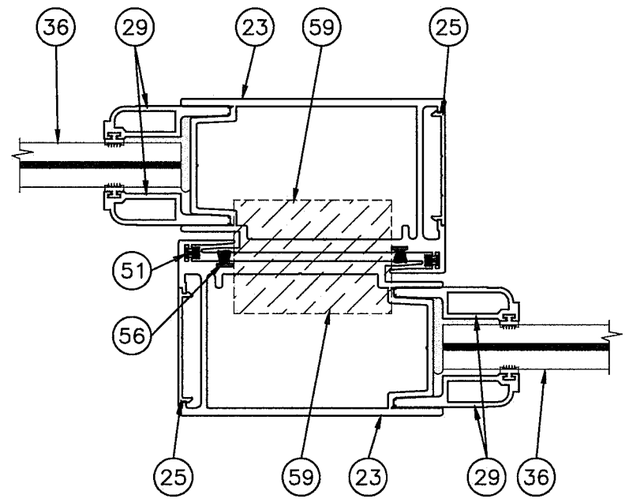

Q/27 HORIZONTAL CROSS SECTION
NON-REINFORCED INTERLOCK TO NON-REINFORCED INTERLOCK

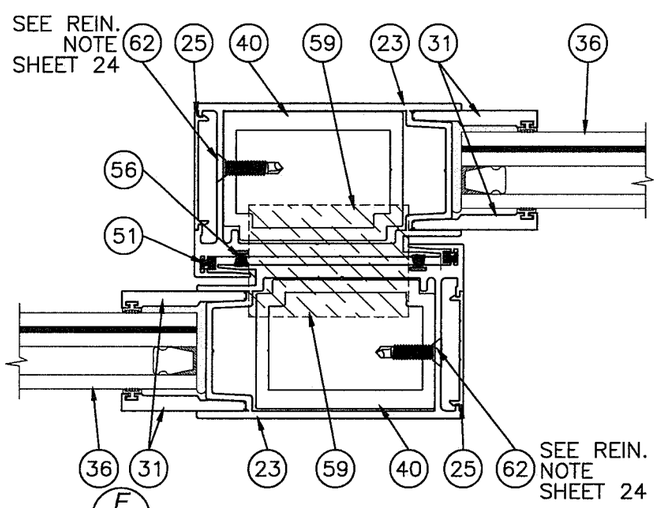

F/27 HORIZONTAL CROSS SECTION
REINFORCED INTERLOCK TO REINFORCED INTERLOCK

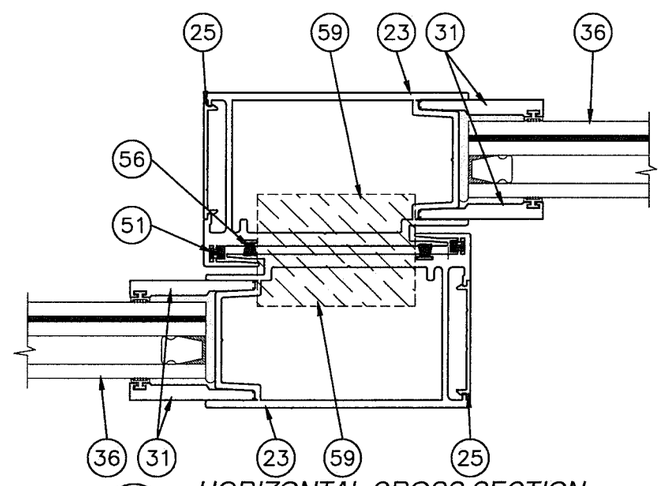

R/27 HORIZONTAL CROSS SECTION
NON-REINFORCED INTERLOCK TO NON-REINFORCED INTERLOCK

EXTERIOR

PRODUCT REVISED
as complying with the Florida Building Code
NOA-No. 20-0814.05
Expiration Date 11/03/2026
By Ishwar I. Chanda
Miami-Dade Product Control

Revision: NO CHANGES THIS SHEET.

PREPARED BY A. LYNN MILLER
1070 TECHNOLOGY DRIVE
N. VENICE, FL 34275
(941) 480-1600
REGISTRATION #29296

WINDOOR® INCORPORATED
WINDOOR INCORPORATED
104 TRIPLE DIAMOND BLVD.
NORTH VENICE, FL 34275
(833) 554-5432

Title	Date	Drawn By	DWG No.	Rev.
ALUMINUM SLIDING GLASS DOOR (LM)	07/28/20	ERIN KOSS	8100CORNER-NOA	

Series	Desc.	Sheet
SGD8100A	SECTION VIEWS	27 OF 36

ANTHONY LYNN MILLER LICENSE No. 58705 STATE OF FLORIDA PROFESSIONAL ENGINEER
7/31/20

A. LYNN MILLER, P.E.
P.E.# 58705

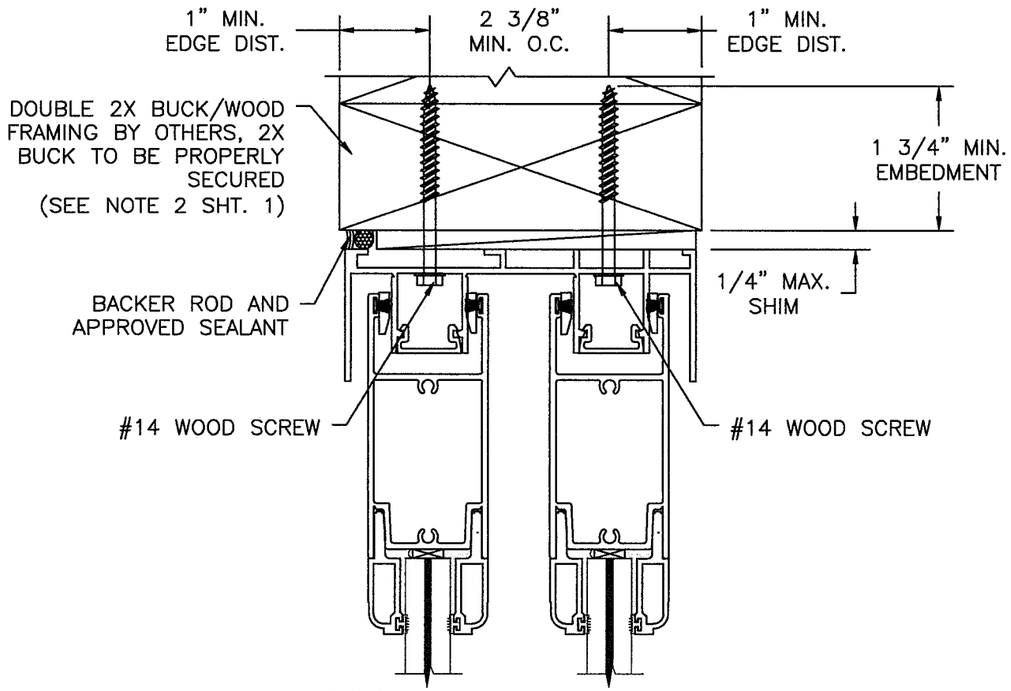

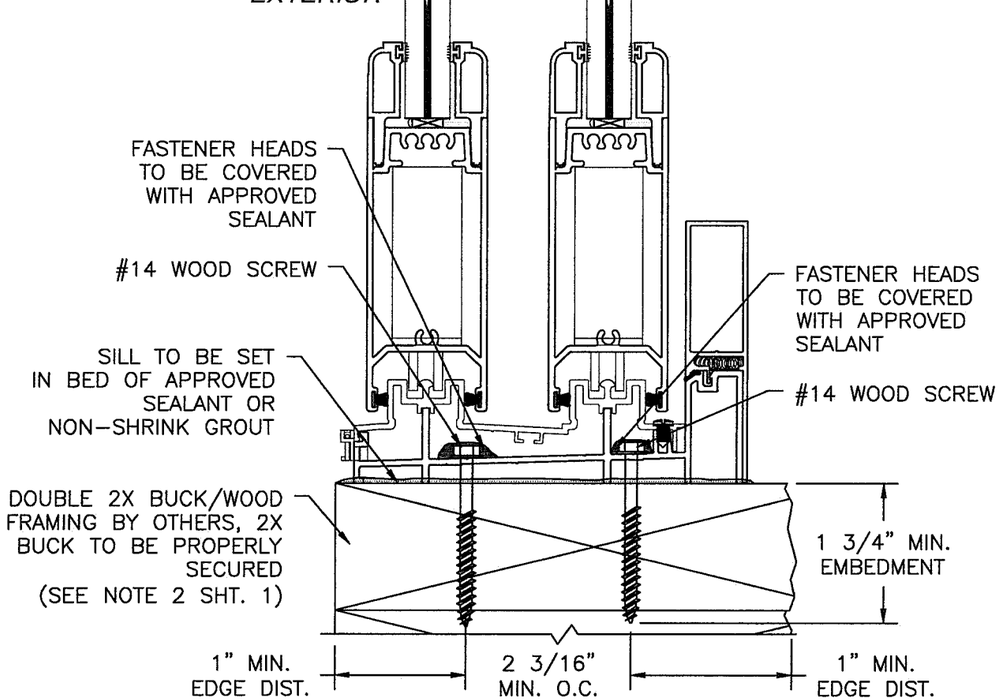

VERTICAL CROSS SECTION

2X BUCK/WOOD FRAMING INSTALLATION

2 TRACK FRAME SHOWN, 3, 4 AND 5 TRACK SIMILAR

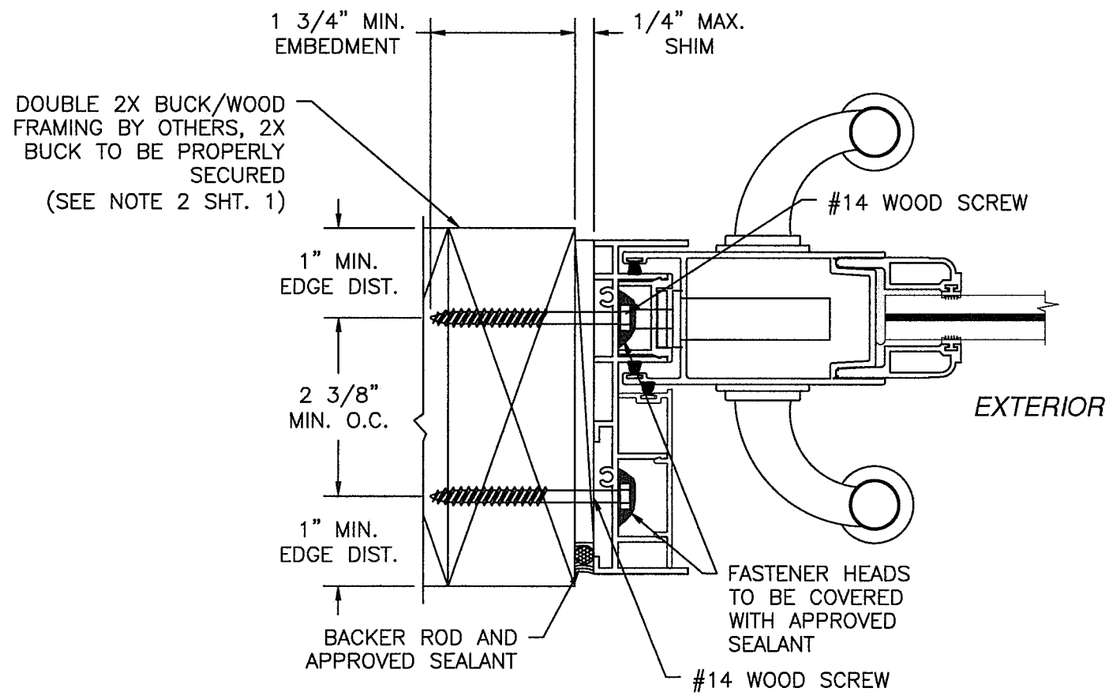

HORIZONTAL CROSS SECTION

2X BUCK/WOOD FRAMING INSTALLATION

2 TRACK FRAME SHOWN, 3, 4 AND 5 TRACK SIMILAR

NOTES:

1. 2X BUCK/WOOD FRAME SUBSTRATE INSTALLATION FOR 2 TRACK SHOWN. ANCHORAGE SIMILAR FOR 3, 4 AND 5 TRACK SYSTEMS. SEE SHEET 21 FOR O.C. ANCHOR SEPARATION.
2. 2 TRACK WITH 3 1/2" SILL RISER SHOWN 3, 4 AND 5 TRACK ARE SIMILAR. OTHER SILL RISERS SIMILAR.

PRODUCT REVISED
as complying with the Florida Building Code
NOA-No. 20-0814.05
Expiration Date 11/03/2026
By Ishaq I. Chanda
Miami-Dade Product Control

Revision: NO CHANGES THIS SHEET.

PREPARED BY A. LYNN MILLER
1070 TECHNOLOGY DRIVE
N. VENICE, FL 34275
(941) 480-1600
REGISTRATION #29296

Rev.	Date	Drawn By	DWG No.	Sheet	Series	Desc.	Title
	07/28/20	ERIN KOSS	8100CORNER-NOA	28 OF 36	SGD8100A	INSTALLATION DETAILS - WOOD	ALUMINUM SLIDING GLASS DOOR (LM)

WINDOOR® INCORPORATED
WINDOOR INCORPORATED
104 TRIPLE DIAMOND BLVD.
NORTH VENICE, FL 34275
(833) 554-5432

ANTHONY LYNN MILLER
LICENSE
No. 58705
7/31/20
STATE OF FLORIDA
PROFESSIONAL ENGINEER

A. LYNN MILLER, P.E.
P.E.# 58705

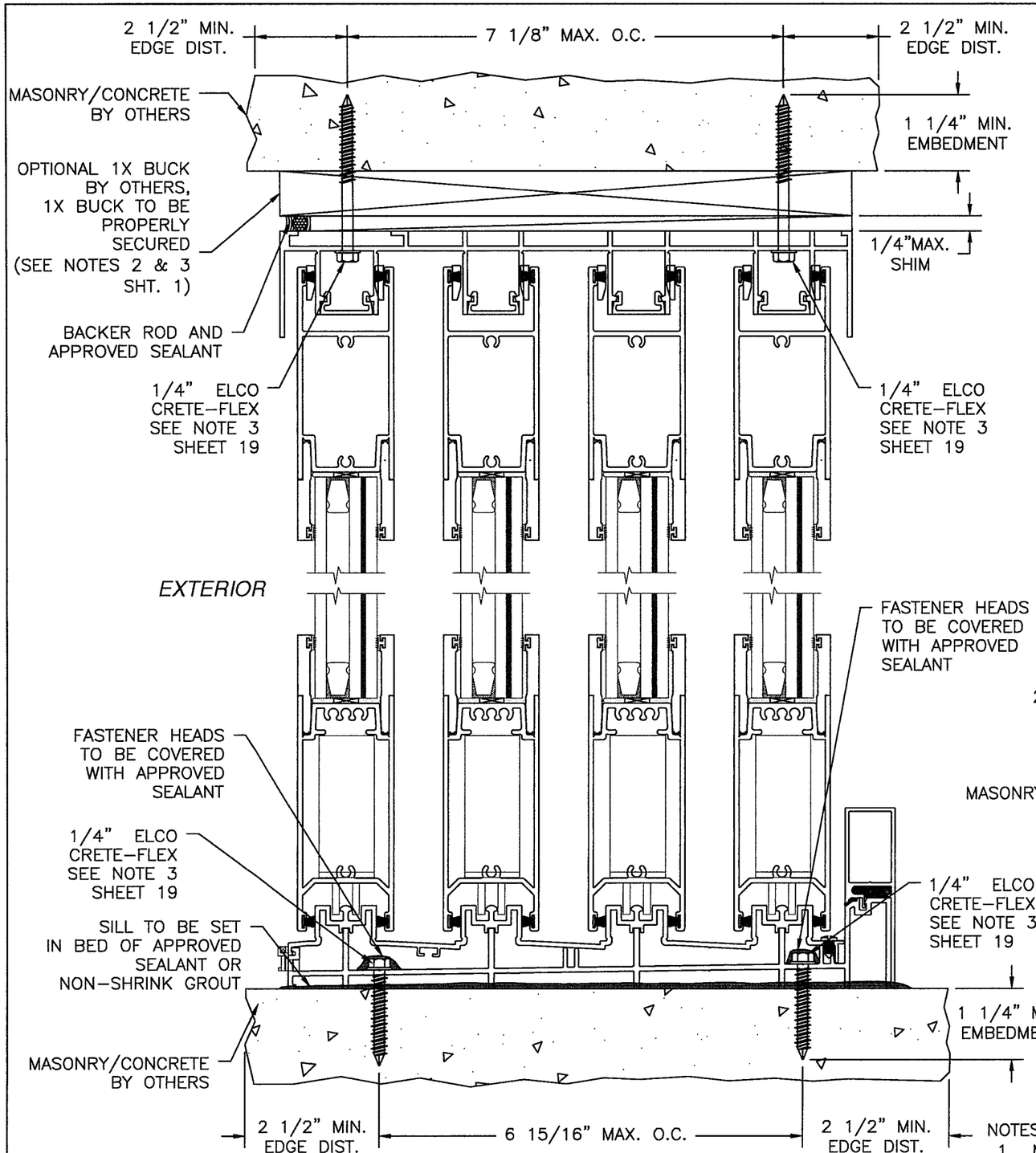

VERTICAL CROSS SECTION

MASONRY/CONCRETE INSTALLATION

4 TRACK FRAME SHOWN, 2, 3 AND 5 TRACK SIMILAR

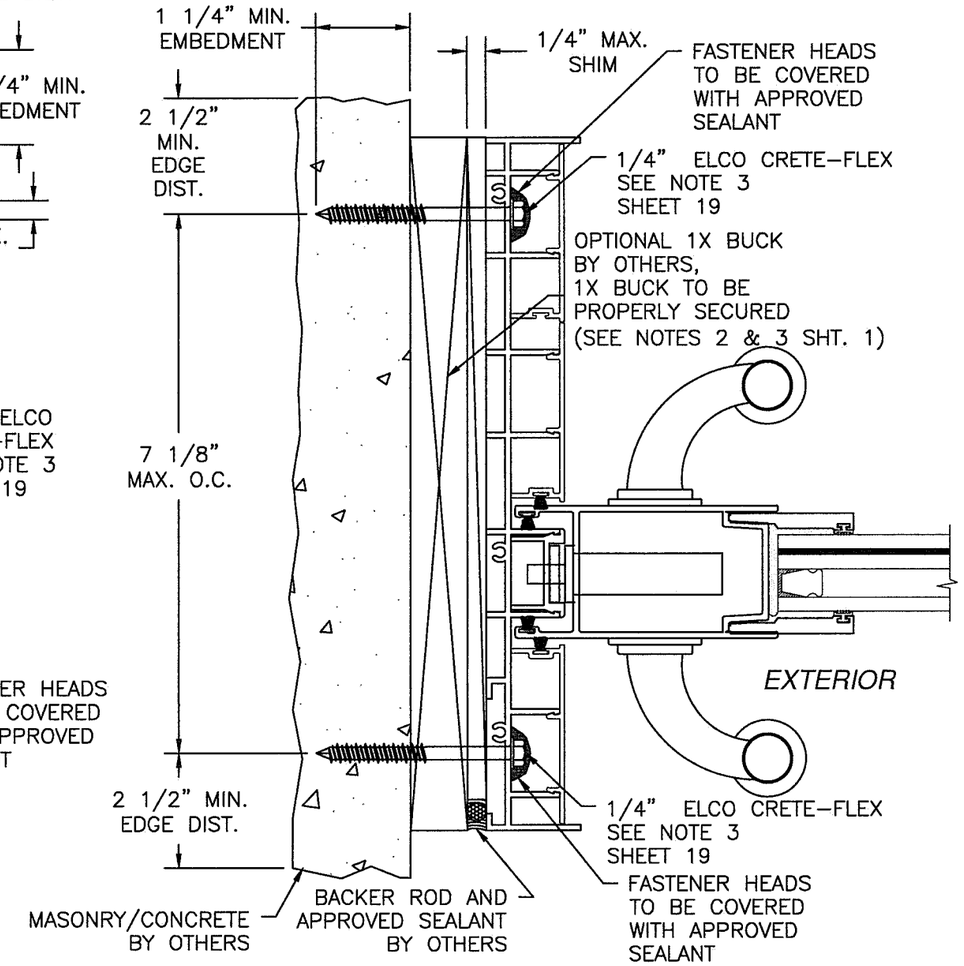

HORIZONTAL CROSS SECTION

4 TRACK FRAME SHOWN, 2, 3 AND 5 TRACK SIMILAR

NOTES:

1. MASONRY/CONCRETE SUBSTRATE INSTALLATION FOR 4 TRACK SHOWN. ANCHORAGE SIMILAR FOR 2, 3 AND 5 TRACK SYSTEMS. SEE SHEET 21 FOR O.C. ANCHOR SEPARATION.
2. 4 TRACK WITH 3" SILL RISER SHOWN 2, 3 AND 5 TRACK ARE SIMILAR. OTHER SILL RISERS SIMILAR.

PRODUCT REVISED
as complying with the Florida Building Code
NOA-No. 20-0814.05
Expiration Date 11/03/2026
By Ishaq I. Chanda
Miami-Dade Product Control

Revision: NO CHANGES THIS SHEET.

PREPARED BY A. LYNN MILLER
1070 TECHNOLOGY DRIVE
N. VENICE, FL 34275
(941) 480-1600
REGISTRATION #29296

WINDOOR® INCORPORATED
WINDOOR INCORPORATED
104 TRIPLE DIAMOND BLVD.
NORTH VENICE, FL 34275
(833) 554-5432

Series	Desc.	Title	Sheet	DWG No.	Drawn By	Date	Rev.
SGD8100A	INSTALLATION DETAILS - MASONRY	ALUMINUM SLIDING GLASS DOOR (LM)	29 OF 36	8100CORNER-NOA	ERIN KOSS	07/28/20	

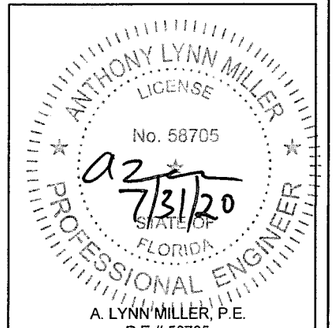

A. LYNN MILLER, P.E.
P.E.# 58705

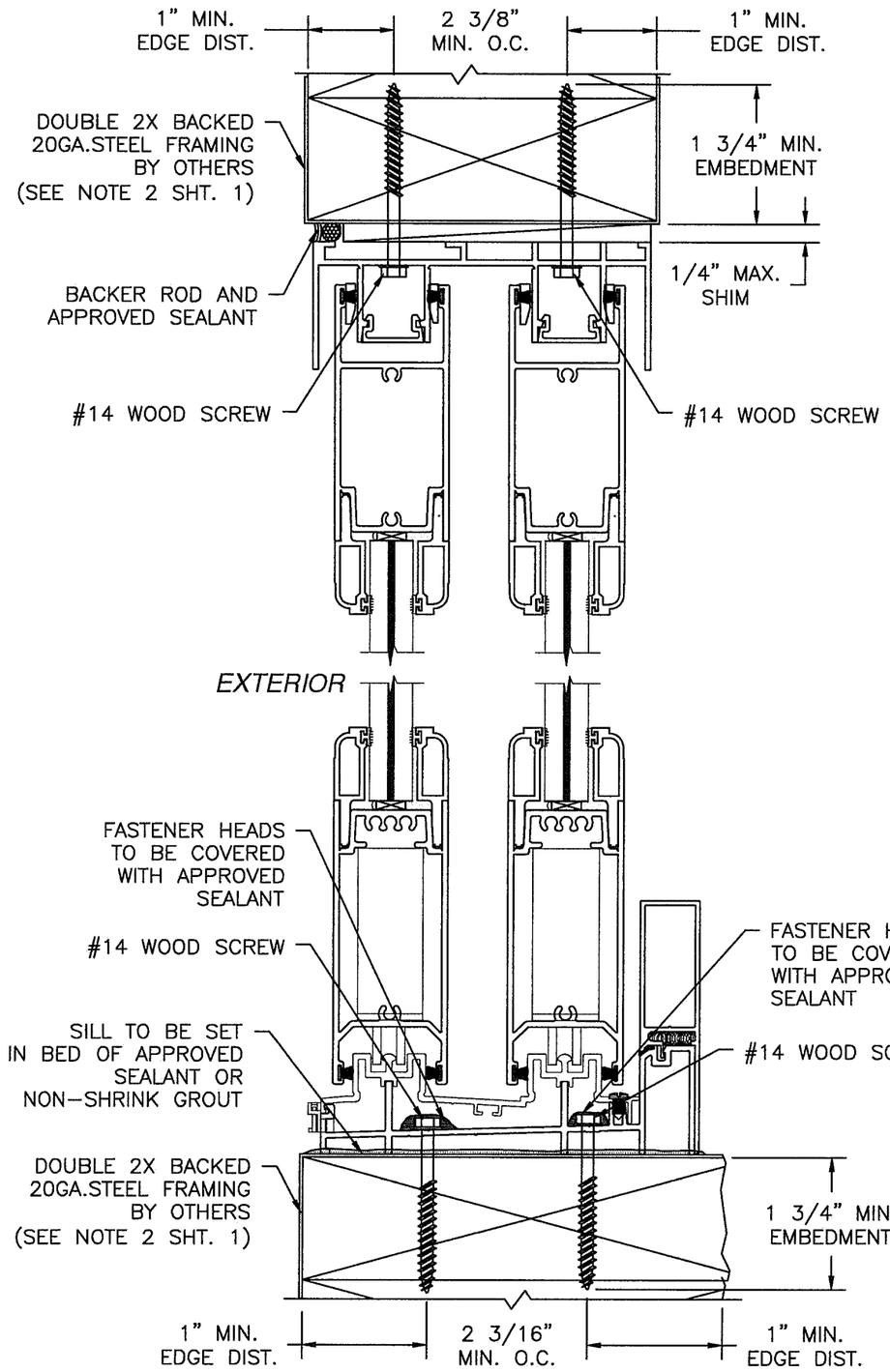

VERTICAL CROSS SECTION

2X BACKED STEEL FRAMING INSTALLATION

2 TRACK FRAME SHOWN, 3, 4 AND 5 TRACK SIMILAR

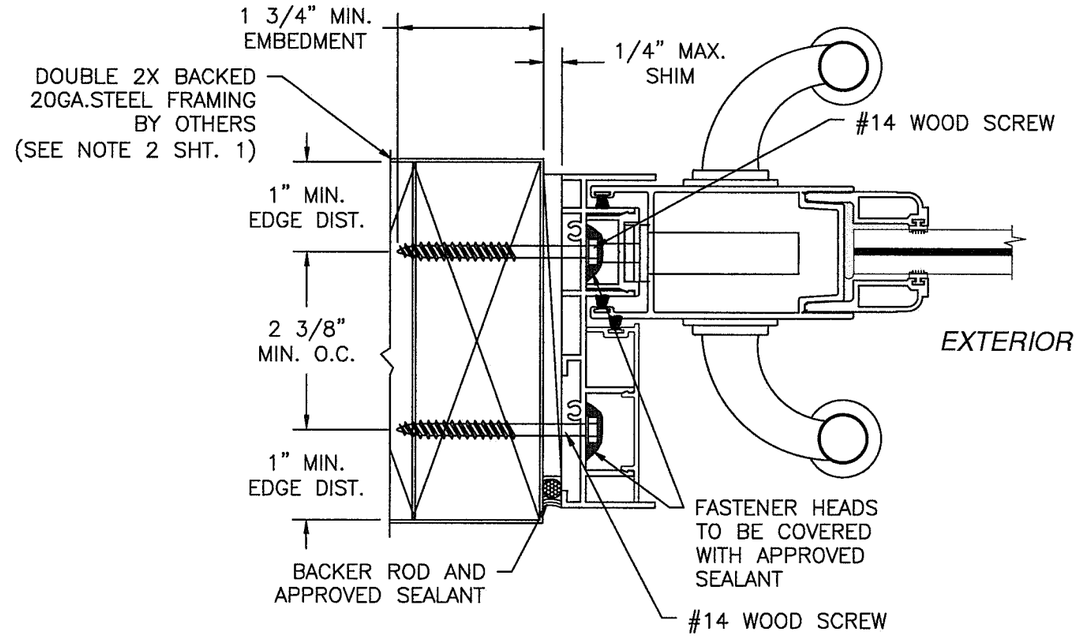

HORIZONTAL CROSS SECTION

2X BACKED STEEL FRAMING INSTALLATION

2 TRACK FRAME SHOWN, 3, 4 AND 5 TRACK SIMILAR

NOTES:

1. WOOD BACKED 20 GA. STEEL STUD SUBSTRATE INSTALLATION FOR 2 TRACK SHOWN. ANCHORAGE SIMILAR FOR 3, 4 AND 5 TRACK SYSTEMS. SEE SHEET 21 FOR O.C. ANCHOR SEPARATION.
2. 2 TRACK WITH 3 1/2" SILL RISER SHOWN 3, 4 AND 5 TRACK ARE SIMILAR. OTHER SILL RISERS SIMILAR.

PRODUCT REVISED
as complying with the Florida Building Code
NOA-No. 20-0814.05
Expiration Date 11/03/2026
By Ishaq I. Chanda
Miami-Dade Product Control

Revision: NO CHANGES THIS SHEET.

PREPARED BY A. LYNN MILLER
1070 TECHNOLOGY DRIVE
N. VENICE, FL 34275
(941) 480-1600
REGISTRATION #29296

Rev.	DWG No.	Drawn By	Date
	8100CORNER-NOA	ERIN KOSS	07/28/20

Series	Desc.	Sheet	Title
SGD8100A	INSTALLATION DETAILS - STEEL	30 OF 36	ALUMINUM SLIDING GLASS DOOR (LM)

WINDOOR® INCORPORATED
WINDOOR INCORPORATED
104 TRIPLE DIAMOND BLVD.
NORTH VENICE, FL 34275
(833) 554-5432

ANTHONY LYNN MILLER
LICENSE
No. 58705
STATE OF FLORIDA
PROFESSIONAL ENGINEER
7/31/20

A. LYNN MILLER, P.E.
P.E.# 58705

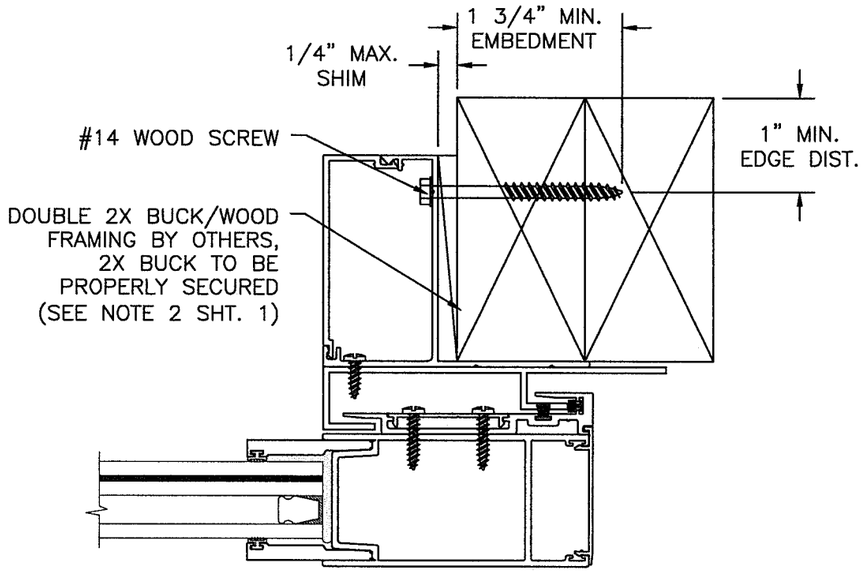

HOOK STRIP CROSS SECTION
2X BUCK/WOOD FRAMING INSTALLATION

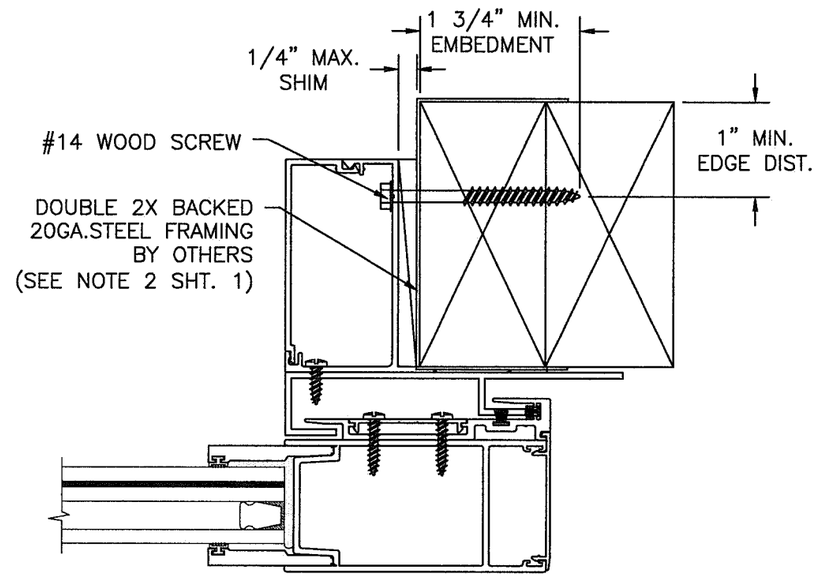

HOOK STRIP CROSS SECTION
2X BACKED STEEL FRAMING INSTALLATION

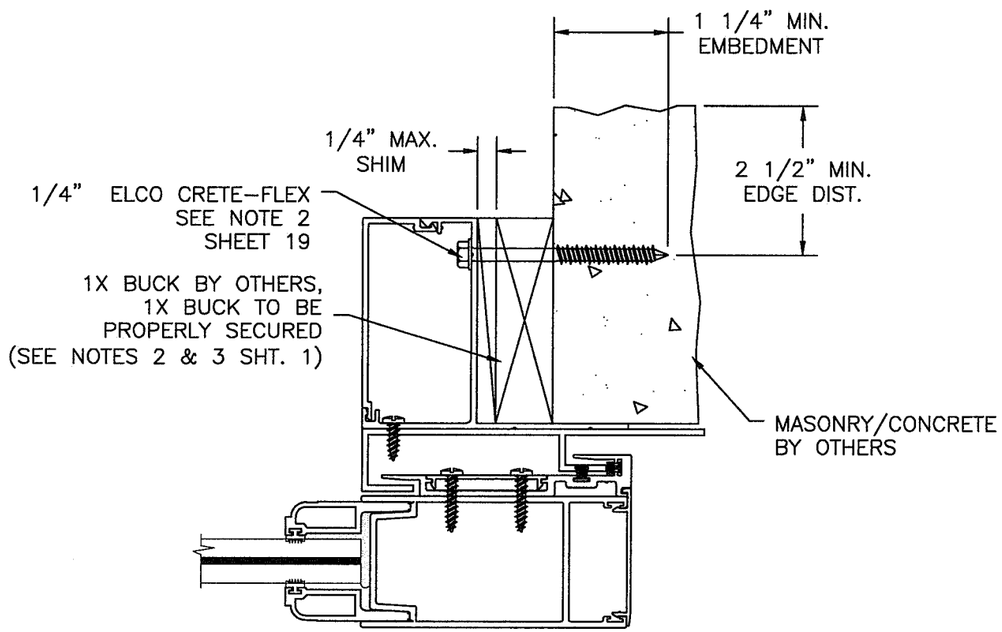

HOOK STRIP CROSS SECTION
MASONRY/CONCRETE INSTALLATION

EXTERIOR

PRODUCT REVISED
as complying with the Florida Building Code
NOA-No. 20-0814.05
Expiration Date 11/03/2026
By Ishaq I. Chanda
Miami-Dade Product Control

Revision: NO CHANGES THIS SHEET.

PREPARED BY A. LYNN MILLER
1070 TECHNOLOGY DRIVE
N. VENICE, FL 34275
(941) 480-1600
REGISTRATION #29296

WINDOOR® INCORPORATED
WINDOOR INCORPORATED
104 TRIPLE DIAMOND BLVD.
NORTH VENICE, FL 34275
(833) 554-5432

Series	Desc.	Title	Sheet	DWG No.	Drawn By	Date	Rev.
SGD8100A	INSTALLATION DETAILS - HOOKSTRIP	ALUMINUM SLIDING GLASS DOOR (LM)	31 OF 36	8100CORNER-NOA	ERIN KOSS	07/28/20	

ANTHONY LYNN MILLER
LICENSE
No. 58705
STATE OF FLORIDA
PROFESSIONAL ENGINEER
7/31/20

A. LYNN MILLER, P.E.
P.E.# 58705

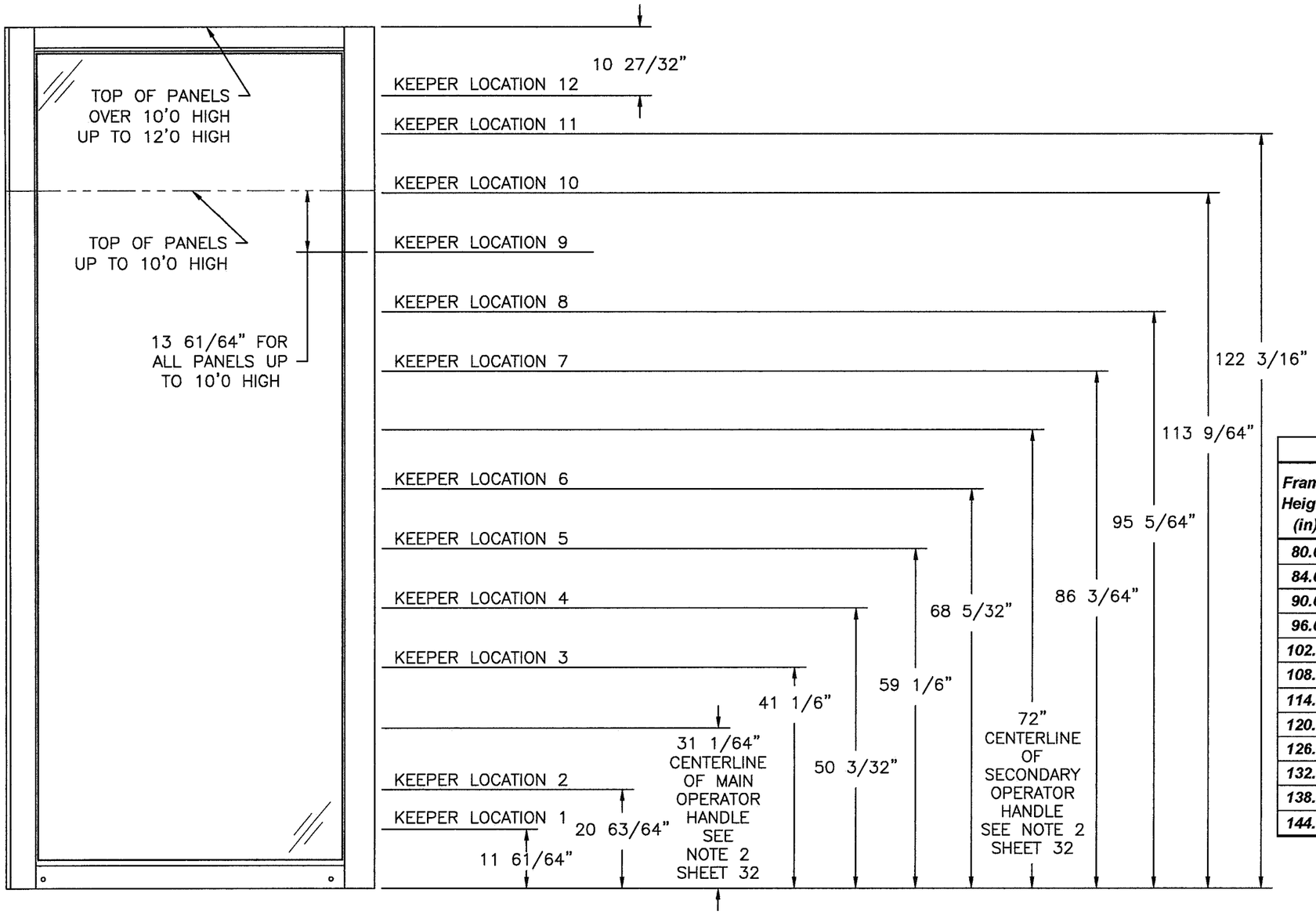

PANEL LOCKING HARDWARE LOCATIONS AT 90° AND 135° CORNERS

Keeper Locations - 90° & 135°								
Frame Height (in)	Keeper Locations							
	1-5	6	7	8	9	10	11	12
80.0	•				•			
84.0	•				•			
90.0	•	•			•			
96.0	•	•			•			
102.0	•	•			•			
108.0	•	•	•		•			
114.0	•	•	•	•	•			
120.0	•	•	•	•	•			
126.0	•	•	•	•	•			•
132.0	•	•	•	•	•	•		•
138.0	•	•	•	•	•	•	•	•
144.0	•	•	•	•	•	•	•	•

LOCKING HARDWARE NOTES:

1. LAYOUT IS FOR ALL PANELS UP TO 12'0" HIGH.
2. MAIN OPERATOR HANDLE OPERATES KEEPER LOCATIONS 1 – 6.
   SECONDARY OPERATOR HANDLE OPERATES KEEPER LOCATIONS 7 –12.

PRODUCT REVISED
as complying with the Florida Building Code
NOA-No. 20-0814.05
Expiration Date 11/03/2026
By Ishaq I. Chanda
Miami-Dade Product Control

Revision: NO CHANGES THIS SHEET.

PREPARED BY A. LYNN MILLER
1070 TECHNOLOGY DRIVE
N. VENICE, FL 34275
(941) 480-1600
REGISTRATION #29296

WINDOOR® INCORPORATED

WINDOOR INCORPORATED
104 TRIPLE DIAMOND BLVD.
NORTH VENICE, FL 34275
(833) 554-5432

Series	Desc.	Sheet	DWG No.	Drawn By	Date	Rev.
SGD8100A	LOCK HARDWARE LAYOUT	32 OF 36	8100CORNER-NOA	ERIN KOSS	07/28/20	

Title: ALUMINUM SLIDING GLASS DOOR (LM)

ANTHONY LYNN MILLER LICENSE No. 58705 STATE OF FLORIDA PROFESSIONAL ENGINEER

7/31/20

A. LYNN MILLER, P.E.
P.E.# 58705

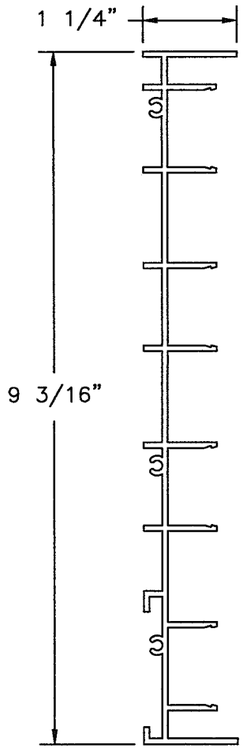

6 4 TRACK FRAME JAMB
ALUMINUM 6063-T6 .075" THICK

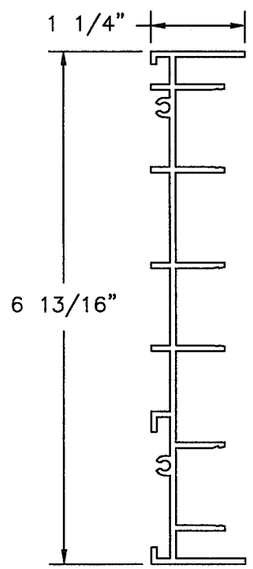

10 3 TRACK FRAME JAMB
ALUMINUM 6063-T6 .075" THICK

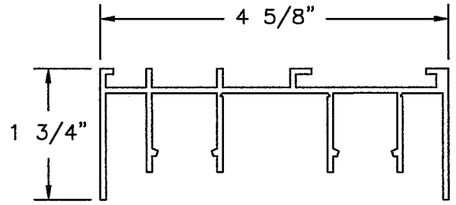

1 2 TRACK FRAME HEAD
ALUMINUM 6063-T6 .075" THICK

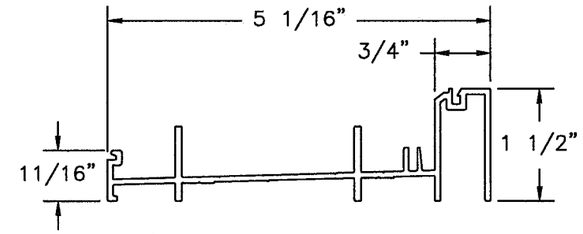

3 2 TRACK SILL PAN
ALUMINUM 6063-T6 .075" THICK

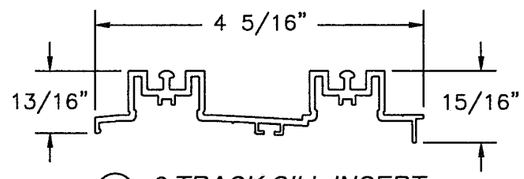

4 2 TRACK SILL INSERT
ALUMINUM 6063-T6 .075" THICK

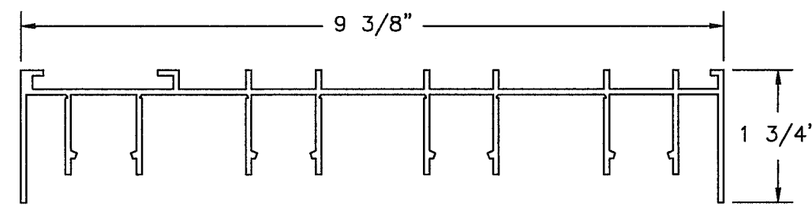

5 4 TRACK FRAME HEAD
ALUMINUM 6063-T6 .075" THICK

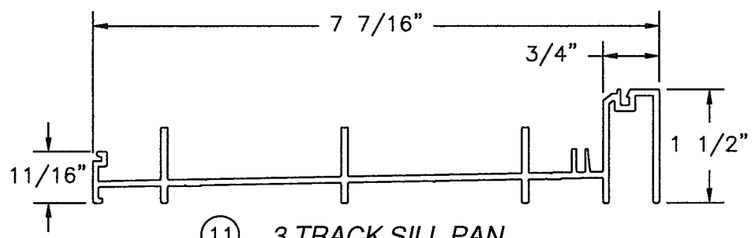

11 3 TRACK SILL PAN
ALUMINUM 6063-T6 .085" THICK

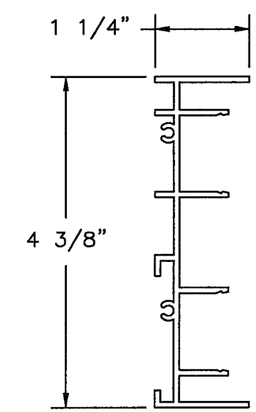

2 2 TRACK FRAME JAMB
ALUMINUM 6063-T6 .075" THICK

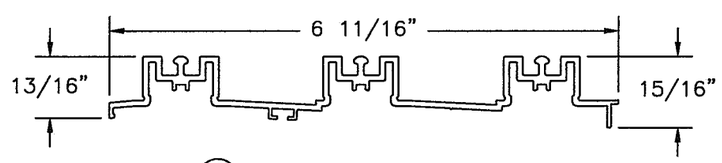

12 3 TRACK SILL INSERT
ALUMINUM 6063-T6 .075" THICK

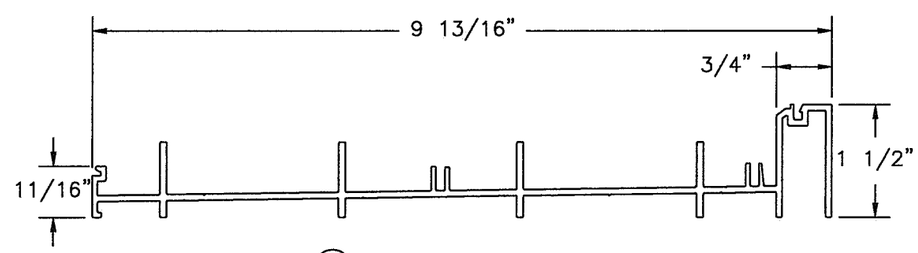

7 4 TRACK SILL PAN
ALUMINUM 6063-T6 .085" THICK

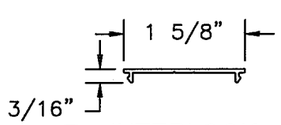

25 INTERLOCK COVER
ALUMINUM 6063-T6 .051" THICK

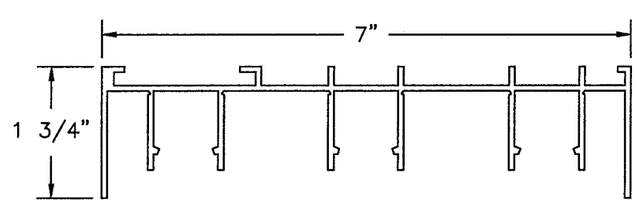

9 3 TRACK FRAME HEAD
ALUMINUM 6063-T6 .075" THICK

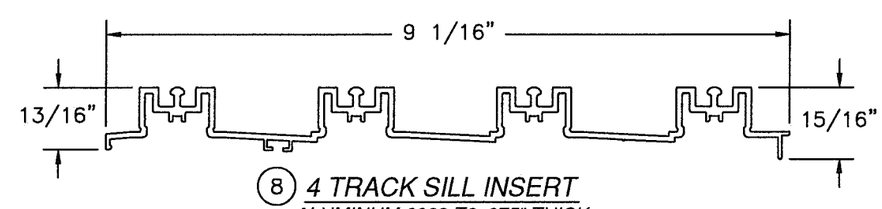

8 4 TRACK SILL INSERT
ALUMINUM 6063-T6 .075" THICK

PRODUCT REVISED
as complying with the Florida Building Code
NOA-No. 20-0814.05
Expiration Date 11/03/2026
By Ishaq I. Chanda
Miami-Dade Product Control

Revision: DIMENSIONS TO 1/16TH, NO LONGER 1/64TH.

PREPARED BY A. LYNN MILLER
1070 TECHNOLOGY DRIVE
N. VENICE, FL 34275
(941) 480-1600
REGISTRATION #29296

WINDOOR® INCORPORATED
WINDOOR INCORPORATED
104 TRIPLE DIAMOND BLVD.
NORTH VENICE, FL 34275
(833) 554-5432

Title	ALUMINUM SLIDING GLASS DOOR (LM)	Date	07/28/20	Rev.	
Desc.	EXTRUSIONS	Drawn By	ERIN KOSS		
Series	SGD8100A	Sheet	33 OF 36	DWG No.	8100CORNER-NOA

ANTHONY LYNN MILLER
LICENSE
No. 58705
STATE OF FLORIDA
PROFESSIONAL ENGINEER
7/31/20
A. LYNN MILLER, P.E.
P.E.# 58705

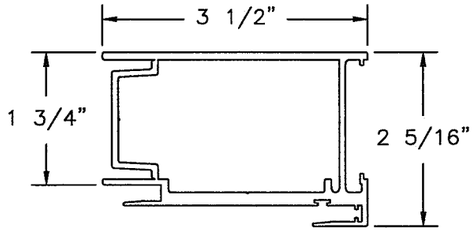

(23) PLAIN STILE INTERLOCK
ALUMINUM 6063-T6 .080" THICK

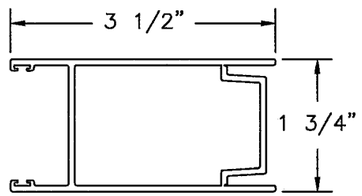

(17) LOCK STILE
ALUMINUM 6063-T6 .080" THICK

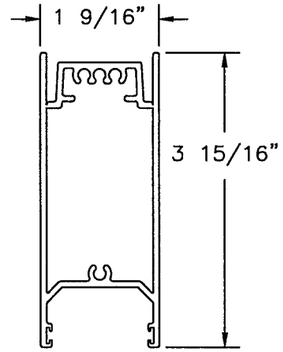

(16) BOTTOM RAIL
ALUMINUM 6063-T6
.080" THICK

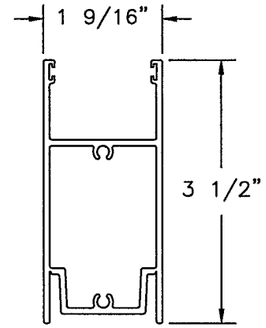

(15) TOP RAIL
ALUMINUM 6063-T6
.080" THICK

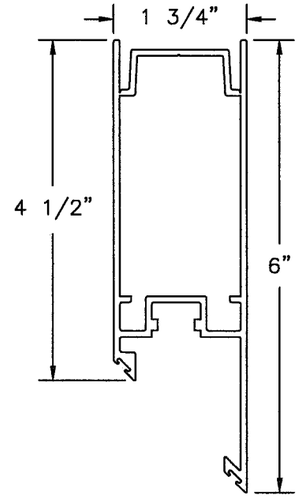

(18) 90° CORNER STILE
ALUMINUM 6063-T6 .081" THICK

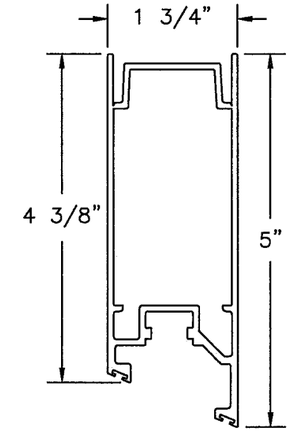

(77) 135° CORNER STILE
ALUMINUM 6063-T6 .081" THICK

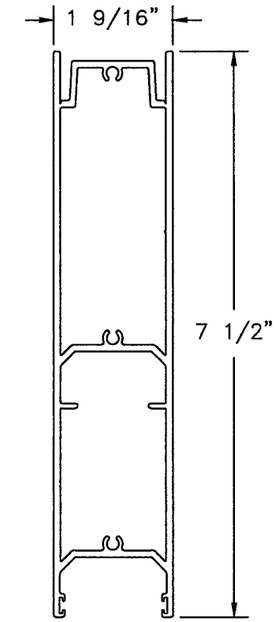

(75) TALL BOTTOM RAIL
ALUMINUM 6063-T6 .080" THICK

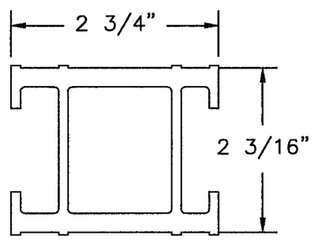

(22) BUTT STILE
REINFOREMENT
ALUMINUM 6005-T5 .125" THICK

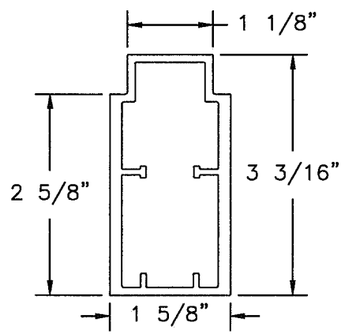

(42) 90° & 135° CORNER
STILE REINFORCEMENT
ALUMINUM 6063-T5 .159" THICK

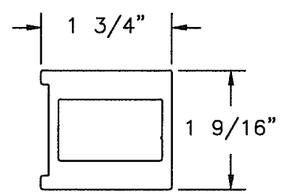

(41) 6000 BUTT STILE
REINFORCING BAR
ALUMINUM 6061-T6 .375" THICK

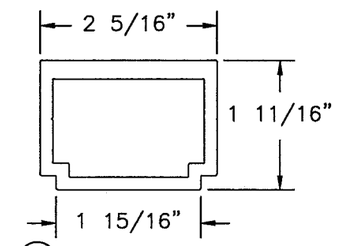

(40) INTERLOCK
REINFORCING BAR
ALUMINUM 6005-T5 .168" THICK

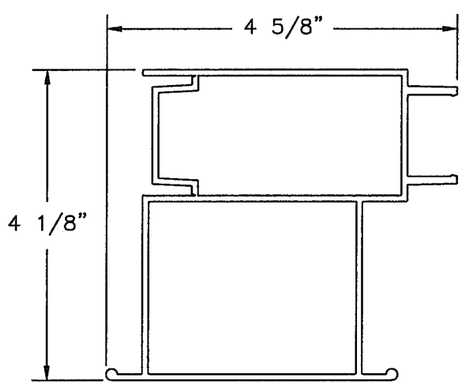

(20) FEMALE BUTT STILE
EXT. OFFSET
ALUMINUM 6063-T6 .080" THICK

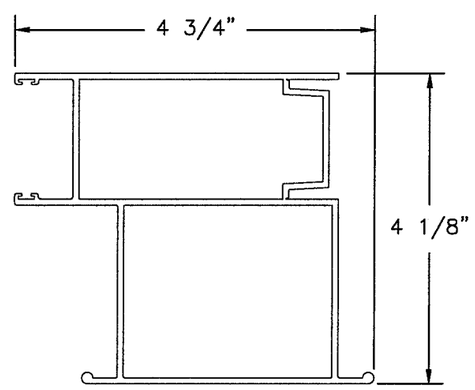

(21) MALE BUTT STILE
EXT. OFFSET
ALUMINUM 6063-T6 .080" THICK

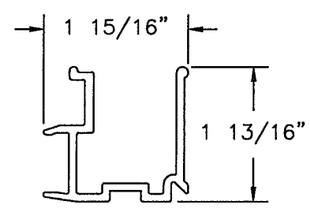

(42) 90° CORNER CLIP
ALUMINUM 6063-T6 .101" THICK

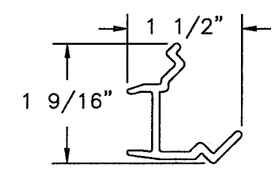

(78) 135° CORNER CLIP
ALUMINUM 6063-T6 .101" THICK

PRODUCT REVISED
as complying with the Florida Building Code
NOA-No. 20-0814.05
Expiration Date 11/03/2026
By Ishaq I. Chanda
Miami-Dade Product Control

Revision: DIMENSIONS TO 1/16TH, NO LONGER 1/64TH.

PREPARED BY A. LYNN MILLER
1070 TECHNOLOGY DRIVE
N. VENICE, FL 34275
(941) 480-1600
REGISTRATION #29296

WINDOOR® INCORPORATED
WINDOOR INCORPORATED
104 TRIPLE DIAMOND BLVD.
NORTH VENICE, FL 34275
(833) 554-5432

Series	Desc.	Sheet	DWG No.	Drawn By	Date	Rev.
SGD8100A	EXTRUSIONS	34 OF 36	8100CORNER-NOA	ERIN KOSS	07/28/20	

Title: ALUMINUM SLIDING GLASS DOOR (LM)

ANTHONY LYNN MILLER
LICENSE
No. 58705
STATE OF FLORIDA
PROFESSIONAL ENGINEER
7/31/20

A. LYNN MILLER, P.E.
P.E.# 58705

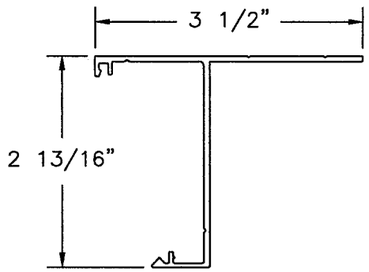

(38) POCKET DOOR HOOK STRIP MOUNT
ALUMINUM 6063-T6 .075" THICK

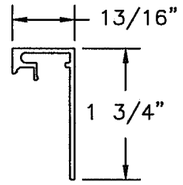

(32) 1 3/4" SILL RISER
ALUMINUM 6063-T6 .060" THICK

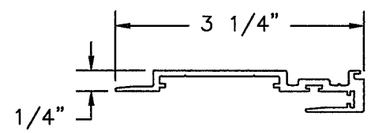

(23) PLAIN STILE INTERLOCK
ALUMINUM 6063-T6 .080" THICK

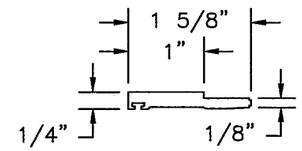

(30) 1" HORIZONTAL GLASS STOP
ALUMINUM 6063-T6 .20" THICK

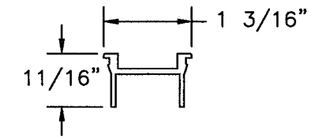

(27) PANEL STILE JAMB INSERT
ALUMINUM 6063-T6 .075" THICK

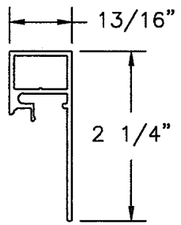

(33) 2 1/4" SILL RISER
ALUMINUM 6063-T6 .060" THICK

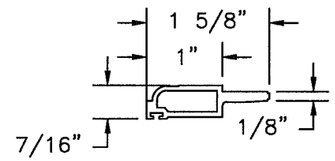

(28) 9/16" HORIZONTAL GLASS STOP
ALUMINUM 6063-T6 .070" THICK

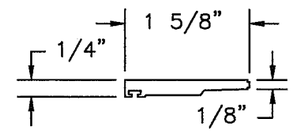

(31) 1" VERTICAL GLASS STOP
ALUMINUM 6063-T6 .20" THICK

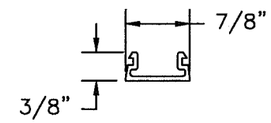

(13) HEAD INSERT
ALUMINUM 6063-T6 .060" THICK

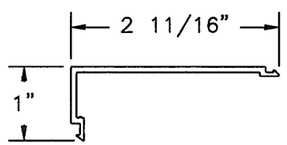

(39) POCKET DOOR HOOK STRIP COVER
ALUMINUM 6063-T6 .075" THICK

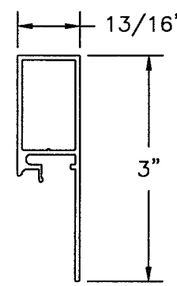

(34) 3" SILL RISER
ALUMINUM 6063-T6 .060" THICK

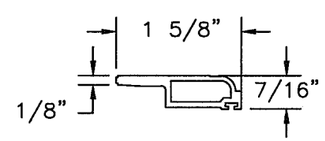

(29) 9/16" VERTICAL GLASS STOP
ALUMINUM 6063-T6 .070" THICK

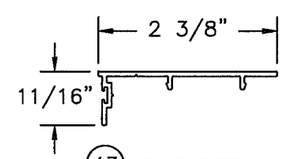

(43) BUMPER JAMB INSERT
ALUMINUM 6063-T6 .060" THICK

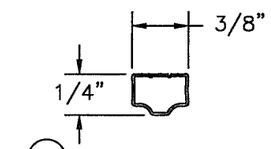

(80) SPACER
ALUMINUM AW3000 .015" THICK

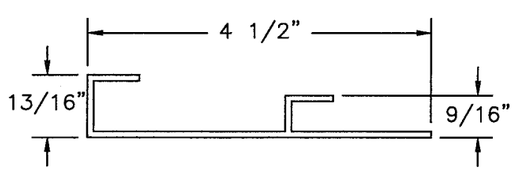

(38) POCKET DOOR HOOK STRIP
ALUMINUM 6063-T6 .080" THICK

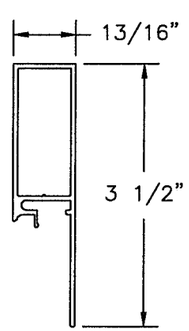

(35) 3 1/2" SILL RISER
ALUMINUM 6063-T6 .060" THICK

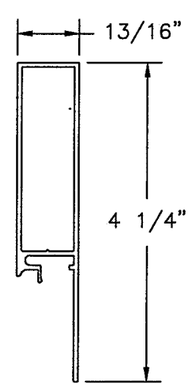

(85) 4 1/4" SILL RISER
ALUMINUM 6063-T6 .060" THICK

PRODUCT REVISED
as complying with the Florida Building Code
NOA-No. 20-0814.05
Expiration Date 11/03/2026
By Ishaq I. Chanda
Miami-Dade Product Control

Revision: DIMENSIONS TO 1/16TH, NO LONGER 1/64TH. ADDED 4-1/4" RISER.

WINDOOR® INCORPORATED
WINDOOR INCORPORATED
104 TRIPLE DIAMOND BLVD.
NORTH VENICE, FL 34275
(833) 554-5432

PREPARED BY A. LYNN MILLER
1070 TECHNOLOGY DRIVE
N. VENICE, FL 34275
(941) 480-1600
REGISTRATION #29296

Title	Desc.	Series	Sheet	DWG No.	Drawn By	Date	Rev.
ALUMINUM SLIDING GLASS DOOR (LM)	EXTRUSIONS	SGD8100A	35 OF 36	8100CORNER-NOA	ERIN KOSS	07/28/20	

ANTHONY LYNN MILLER
LICENSE
No. 58705
STATE OF FLORIDA
PROFESSIONAL ENGINEER
7/3/20

A. LYNN MILLER, P.E.
P.E.# 58705

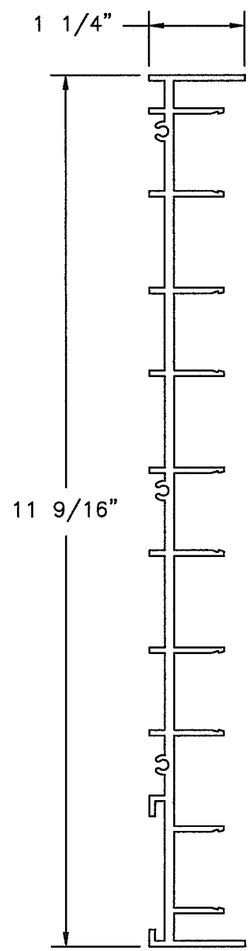

(81) 5 TRACK FRAME JAMB
ALUMINUM 6063-T6 .075" THICK

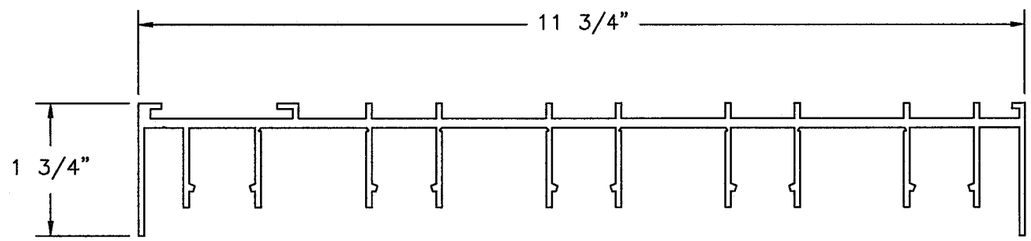

(80) 5 TRACK FRAME HEAD
ALUMINUM 6063-T6 .075" THICK

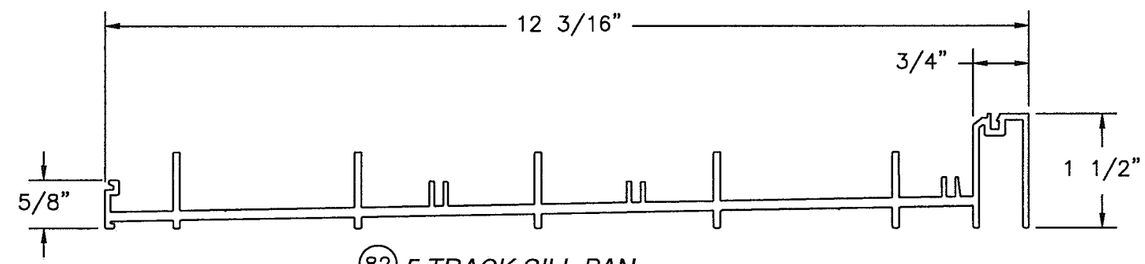

(82) 5 TRACK SILL PAN
ALUMINUM 6063-T6 .125" THICK

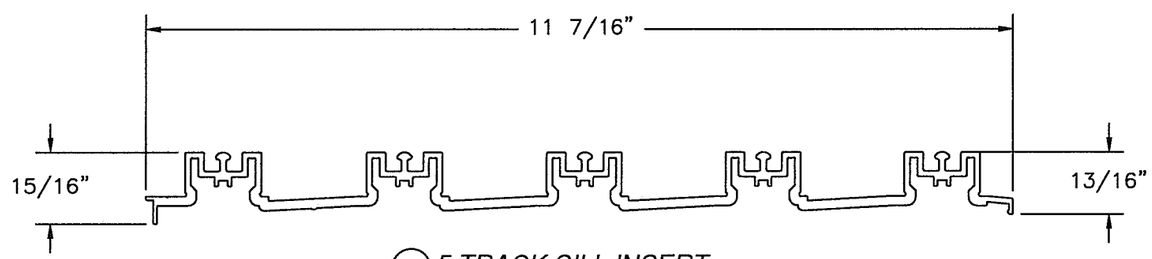

(83) 5 TRACK SILL INSERT
ALUMINUM 6063-T6 .125" THICK

PRODUCT REVISED
as complying with the Florida Building Code
NOA-No. 20-0814.05
Expiration Date 11/03/2026
By Ishaq I. Chanda
Miami-Dade Product Control

Revision: DIMENSIONS TO 1/16TH, NO LONGER 1/64TH.

PREPARED BY A. LYNN MILLER
1070 TECHNOLOGY DRIVE
N. VENICE, FL 34275
(941) 480-1600
REGISTRATION #29296

WINDOOR® INCORPORATED
WINDOOR INCORPORATED
104 TRIPLE DIAMOND BLVD.
NORTH VENICE, FL 34275
(833) 554-5432

Series	Sheet	DWG No.	Rev.
SGD8100A	36 OF 36	8100CORNER-NOA	

Desc.	Drawn By	Date
EXTRUSIONS	ERIN KOSS	07/28/20

Title: ALUMINUM SLIDING GLASS DOOR (LM)

ANTHONY LYNN MILLER
LICENSE
No. 58705
STATE OF FLORIDA
PROFESSIONAL ENGINEER
7/31/20

A. LYNN MILLER, P.E.
P.E.# 58705