MIAMI-DADE COUNTY
DEPARTMENT OF REGULATORY AND ECONOMIC RESOURCES (RER)
BOARD AND CODE ADMINISTRATION DIVISION

MIAMI-DADE COUNTY
PRODUCT CONTROL SECTION
11805 SW 26 Street, Room 208
T (786) 315-2590 F (786) 315-2599
www.miamidade.gov/economy

NOTICE OF ACCEPTANCE (NOA)

WinDoor, Incorporated
104 Triple Diamond Blvd.,
North Venice, Fl. 34275

SCOPE:

This NOA is being issued under the applicable rules and regulations governing the use of construction materials. The documentation submitted has been reviewed and accepted by Miami-Dade County RER -Product Control Section to be used in Miami Dade County and other areas where allowed by the Authority Having Jurisdiction (AHJ).

This NOA shall not be valid after the expiration date stated below. The Miami-Dade County Product Control Section (In Miami Dade County) and/or the AHJ (in areas other than Miami Dade County) reserve the right to have this product or material tested for quality assurance purposes. If this product or material fails to perform in the accepted manner, the manufacturer will incur the expense of such testing and the AHJ may immediately revoke, modify, or suspend the use of such product or material within their jurisdiction. RER reserves the right to revoke this acceptance, if it is determined by Miami-Dade County Product Control Section that this product or material fails to meet the requirements of the applicable building code.

This product is approved as described herein and has been designed to comply with the Florida Building Code, including the High Velocity Hurricane Zone.

DESCRIPTION: Series "7000" Aluminum Sliding Glass Door W/WO Reinforcements-LMI

APPROVAL DOCUMENT: Drawing No. **SGD7000-LMI-NOA** Rev **A,** titled "7000 Series SGD-LMI", sheets 1 through 21 of 21, prepared by manufacturer, dated 04/03/20 and last revised on 07/28/20, signed and sealed by Lynn A. Miller, P.E., bearing the Miami-Dade County Product Control Revision stamp with the Notice of Acceptance number and expiration date by the Miami-Dade County Product Control Section.

MISSILE IMPACT RATING: Large and Small Missile Impact Resistant

Limitations:

1. See Design Pressures Vs sizes, reinforcements, sill riser and glass types in sheets 2 thru 4 & additional sizes in sheets 5 & 6.
2. See anchor charts (Non-reinforced VS Reinforced) in sheets **5** & **6**. Two (**2**) anchors at each anchor location shown in sheets 5 & 6, at head, sill and jambs, except one (1) anchor per location pocket (hook-strips jamb) not to exceed **11**" O.C. is required per chart #10 (sheet 6).

LABELING: Each unit shall bear a permanent label with the manufacturer's name or logo, city, state and series and following statement: "Miami-Dade County Product Control Approved", unless otherwise noted herein.

RENEWAL of this NOA shall be considered after a renewal application has been filed and there has been no change in the applicable building code negatively affecting the performance of this product.

TERMINATION of this NOA will occur after the expiration date or if there has been a revision or change in the materials, use, and/or manufacture of the product or process. Misuse of this NOA as an endorsement of any product, for sales, advertising or any other purposes shall automatically terminate this NOA. Failure to comply with any section of this NOA shall be cause for termination and removal of NOA.

ADVERTISEMENT: The NOA number preceded by the words Miami-Dade County, Florida, and followed by the expiration date may be displayed in advertising literature. If any portion of the NOA is displayed, then it shall be done in its entirety.

INSPECTION: A copy of this entire NOA shall be provided to the user by the manufacturer or its distributors and shall be available for inspection at the job site at the request of the Building Official.

This NOA **revises NOA # 20-0406.09** and consists of this page 1 and evidence pages E-1, E-2, E-3, E-4 & E-5, as well as approval document mentioned above.

The submitted documentation was reviewed by **Ishaq I. Chanda, P.E.**

MIAMI-DADE COUNTY APPROVED

Ishaq I. Chanda

WinDoor, Incorporated

NOTICE OF ACCEPTANCE: EVIDENCE SUBMITTED

1. Evidence submitted in previous files

A. DRAWINGS

1. Manufacturer's die drawings and sections (submitted under files below)
2. Drawing No. **08-00638 Rev F,** titled "7000 Series SGD-LMI", sheets 1 through 21 of 21, prepared by manufacturer, dated 12/10/08 and last revised on 02/09/16, signed and sealed by Luis R. Lomas, P.E.

B. TESTS (Submitted under files # **12-0130.08**/# **09-0519.12**)

1. Test reports on: 1) Air Infiltration Test, per FBC, TAS 202-94
   2) Uniform Static Air Pressure Test, Loading per FBC TAS 202-94
   3) Water Resistance Test, per FBC, TAS 202-94
   4) Large Missile Impact Test per FBC, TAS 201-94
   5) Cyclic Wind Pressure Loading per FBC, TAS 203-94
   6) Forced Entry Test, per FBC 2411 3.2.1, TAS 202-94

Along with marked-up drawings and installation diagram of Aluminum Sliding Glass, prepared by National Certified Testing Laboratories Inc., Test Report No. **NCTL-210-3533-2**, dated 03/25/09, signed & sealed by Gerald J, Ferrara, P.E.

C. CALCULATIONS

1. Anchor verification calculations, structural & comparative analysis, complying with FBC2014(5th Edition), dated 05-29-15, 12-09-15 and last revised on 02/05/16, prepared, signed and sealed by Luis R. Lomas, P.E.
2. Glazing complies with ASTME-1300-02, -04 &-09.

D. QUALITY ASSURANCE

1. Miami Dade Department of Regulatory and Economic Resources (RER).

E. MATERIAL CERTIFICATIONS (Submitted under files # **12-0130.08**/# **09-0519.12**)

1. Notice of Acceptance No. **14-0916.11** issued to **Kuraray America, Inc.** (Former E.I. DuPont DeNemours & Co., Inc. for the "**Sentry Glass ® (Clear and White) Glass Interlayers**", expiring on 07/04/18.
2. Notice of Acceptance No. **14-0916.10** issued to **Kuraray America, Inc.** (Former E.I. DuPont DeNemours & Co., Inc. for the "**Kurray Butacite PVB Interlayers**", expiring on 12/11/2016.

F. STATEMENTS

1. Statement letter of conformance to FBC 2014 (5th edition) and "No financial interest", dated 05/29/15, prepared, signed and sealed by Luis R. Lomas, P.E.
2. Test lab compliance statement, part of the above referenced reports.

G. OTHER

1. This NOA **revises & renews NOA # 12-0130.08**, expiring on June 02, 2020
2. Test Proposals **# 07-3931**, dated 04/31/2008 approved by BCCO.

Ishaq I. Chanda

Ishaq I. Chanda, P.E.
Product Control Unit Supervisor
NOA No. 20-0806.05
Expiration Date: June 02, 2025
Approval Date: December 03, 2020

WinDoor, Incorporated

NOTICE OF ACCEPTANCE: EVIDENCE SUBMITTED

2. Evidence submitted under previous file.

A. DRAWINGS

1. Drawing No. **08-00638 Rev G,** titled "7000 Series SGD-LMI", sheets 1 through 21 of 21, prepared by manufacturer, dated 12/10/08 and last revised on 11/28/17, signed and sealed by Luis R. Lomas, P.E.

B. Test

1. None.

C. CALCULATIONS

1. Anchor verification dated 11/27/17 complying w/ FBC 2017 (6th Edition), prepared, signed and sealed by Luis R. Lomas, P.E.

D. QUALITY ASSURANCE

1. Miami Dade Department of Regulatory and Economic Resources (RER).

E. MATERIAL CERTIFICATIONS

1. Notice of Acceptance No. **14-0916.11** issued to **Kuraray America, Inc.** (Former E.I. DuPont DeNemours & Co., Inc. for the "**Sentry Glass ® (Clear and White) Glass Interlayers**", expiring on 07/04/18.
2. Notice of Acceptance No. **16-1117.01** issued to Kuraray America, Inc. (former E.I. DuPont DeNemours & Co., Inc.) for "**Trosifol**: Ultra clear, clear & color PVB glass interlayer" (former "Kuraray **Butacite** PVB Interlayer)", expiring on 07/08/19.

F. STATEMENTS

1. Statement letter of conformance to FBC 2017 (**6th** Edition), dated 11/27/17 prepared, signed and sealed by Luis R. Lomas, P.E.

G. OTHER

1. This NOA **revises # 15-0604.09**, expiring 06/02/20.

3. Evidence submitted under previous approval.

A. DRAWINGS

1. Drawing No. **SGD7000-LMI-NOA** (former **08-00638 Rev G),** titled "7000 Series SGD-LMI", sheets 1 through 21 of 21, prepared by manufacturer, dated 04/03/20, signed and sealed by Lynn A. Miller, P.E.

B. Test

1. None.

C. CALCULATIONS (submitted under **# 17-1219.06**)

Ishaq I. Chanda

Ishaq I. Chanda, P.E.
Product Control Unit Supervisor
NOA No. 20-0806.05
Expiration Date: June 02, 2025
Approval Date: December 03, 2020

NOTICE OF ACCEPTANCE: EVIDENCE SUBMITTED

D. QUALITY ASSURANCE

1. Miami Dade Department of Regulatory and Economic Resources (RER).

E. MATERIAL CERTIFICATIONS

1. Notice of Acceptance No. **17-0808.02** issued to **Kuraray America, Inc.** (Former E.I. DuPont DE Nemours & Co., Inc. for the "**Sentry Glass ® (Clear and White) Glass Interlayers**", expiring on 07/04/23.
2. Notice of Acceptance No. **19-0305.02** issued to Kuraray America, Inc. (former E.I. DuPont DE Nemours & Co., Inc.) for "**Trosifol**: Ultra clear, clear & color PVB glass interlayer" (former "Kuraray **Butacite** PVB Interlayer)", expiring on 07/08/24.

F. STATEMENTS

1. Statement letter of conformance and "to FBC 2017 (**6th** Edition) and "no financial interest both dated 04/03/20, prepared, signed and sealed by Lynn A. Miller, P.E.
2. Statement Letter of Successor Engineer adopting another Engineer's work as his own per FLA 61G15.27.001, dated 04/02/20, prepared, signed and sealed by Lynn A. Miller, P.E.

G. OTHER

1. This NOA **renews # 17-1219.06**, expiring 06/02/25.

4. NEW EVIDENCE SUBMITTED

A. DRAWINGS

1. Drawing No. **SGD7000-LMI-NOA** Rev **A,** titled "7000 Series SGD-LMI", sheets 1 through 21 of 21, prepared by manufacturer, dated 04/03/20 and last revised on 07/28/20, signed and sealed by Lynn A. Miller, P.E.

B. TESTS

1. Test reports on: 1) Air Infiltration Test, per FBC, TAS 202-94
2) Uniform Static Air Pressure Test, Loading per FBC, TAS 202-94
3) Water Resistance Test, per FBC, TAS 202-94
4) Large Missile Impact Test per FBC, TAS 201-94
5) Cyclic Wind Pressure Loading per FBC, TAS 203-94
6) Forced Entry Test, per ASTM F588 and TAS 202-94

along with marked-up drawings and installation diagram of all Windoor Inc., CGI Windows and Doors, Inc. and PGT Industries, Inc., representative units listed below and tested to qualify **Dowsil 791** and **Dowsil 983** silicones, per Proposal #**19-1155TP**, prepared by Fenestration Testing Laboratory, Inc., Test Reports No.:

WinDoor, Inc. test specimens:

FTL-20-2078.1, WinDoor PW3000 Aluminum Fixed Lite (unit 11 in proposal)
FTL-20-2078.2, WinDoor HR9470 Thermally Broken Alum. Horiz. Roller (unit 12)
FTL-20-2078.3, WinDoor SGD8100 Alum. Sliding Glass Door (unit 13 in proposal)
FTL-20-2078.4, WinDoor HR9470 Thermally Broken Alum. Horiz. Roller (unit 14)
FTL-20-2078.5, WinDoor PW9020 Alum. Fixed Lite (unit 15 in proposal) and
FTL-20-2078.6, WinDoor PW9020 Alum. Fixed Lite (unit 16 in proposal), all dated 09/24/20 and signed and sealed by Idalmis Ortega, P.E.

Ishaq I. Chanda

Ishaq I. Chanda, P.E.
Product Control Unit Supervisor
NOA No. 20-0806.05
Expiration Date: June 02, 2025
Approval Date: December 03, 2020

NOTICE OF ACCEPTANCE: EVIDENCE SUBMITTED

B. TESTS (continue):

CGI Windows and Doors Inc. test specimens:

FTL-20-2108.1, CGI SH360 Aluminum Single Hung Window (unit 1 in proposal) **FTL-20-2108.2,** CGI CA238 Alum. Outswing Casement Window (unit 2 in proposal) **FTL-20-2108.3,** CGI SGD560 Aluminum Sliding Glass Door (unit 3 in proposal) **FTL-20-2108.4**, CGI PW410 Aluminum Fixed Window (unit 4 in proposal) and **FTL-20-2108.5**, CGI SH360 Aluminum Single Hung Window (unit 5 in proposal)all dated 08/24/20 and signed and sealed by Idalmis Ortega, P.E.

PGT Industries, Inc. test specimens:

FTL-7897, PGT PW5520 PVC Fixed Window (unit 6 in proposal), dated 09/03/14 **FTL-20-2107.1,** PGT SGD780 Aluminum Sliding Glass Door (unit 7 in proposal) **FTL-20-2107.2,** PGT CA740 Alum. Outswing Casement Window (unit 8 in proposal) **FTL-20-2107.3,** PGT PW7620A Aluminum Fixed Window (unit 9 in proposal) and **FTL-20-2107.4**, PGT PW7620A Aluminum Fixed Window (unit 10 in proposal) all dated 07/13/20 and signed and sealed by Idalmis Ortega, P.E.

C. CALCULATIONS

1. Anchor verification calculations and structural analysis, complying with **FBC 7th Edition (2020)**, dated 07/28/20, prepared by manufacturer, signed and sealed by Anthony Lynn Miller, P.E.
2. Glazing complies with **ASTM E1300-04, -09, -12 and -16.**

D. QUALITY ASSURANCE

1. Miami Dade Department of Regulatory and Economic Resources (RER).

E. MATERIAL CERTIFICATIONS

1. Notice of Acceptance No. **19-0305.02** issued to **Kuraray America, Inc.** for their **"Trosifol® Ultraclear, Clear and Color PVB Glass Interlayers**", expiring on 07/08/24.
2. Notice of Acceptance No. **17-0808.02** issued to **Kuraray America, Inc.** for their **"SentryGlas® (Clear and White) Glass Interlayers**", expiring on 07/04/23.

F. STATEMENTS

1. Statement letters of conformance to FBC 2020(**7th** Edition) and "No financial interest", dated 07/28/20, prepared, signed & sealed by Lynn Miller, P. E.
2. Statement of Lab compliance as part of the test report.

G. OTHER

1. This NOA **revises NOA No. 20-0406.09** and updates to FBC 2020 (7th Edition) expiring 06/02/25.
2. RER Test proposals #**19-1155** dated 01/10/20 approved by Ishaq I. Chanda, P.E.

Ishaq I. Chanda

Ishaq I. Chanda, P.E.
Product Control Unit Supervisor
NOA No. 20-0806.05
Expiration Date: June 02, 2025
Approval Date: December 03, 2020

NOTES:

1. THE PRODUCT SHOWN HEREIN IS DESIGNED AND MANUFACTURED TO COMPLY WITH REQUIREMENTS OF THE FLORIDA BUILDING CODE 6TH EDITION (2017) AND 7TH EDITION (2020) INCLUDING THE HVHZ.
2. WOOD FRAMING/2X BUCK, 20 GA. 2X WOOD BACKED STEEL STUD OR MASONRY/CONCRETE OPENING TO BE DESIGNED AND ANCHORED TO PROPERLY TRANSFER ALL LOADS TO STRUCTURE. WOOD FRAMING/2X BUCK, 20 GA. 2X WOOD BACKED STEEL STUD OR MASONRY/CONCRETE OPENING IS THE RESPONSIBILITY OF THE ARCHITECT OR ENGINEER OF RECORD.
3. 1X BUCK OVER MASONRY/CONCRETE IS OPTIONAL. WHERE 1X BUCK IS NOT USED DISSIMILAR MATERIALS MUST BE SEPARATED WITH APPROVED COATING OR MEMBRANE. SELECTION OF COATING OR MEMBRANE IS THE RESPONSIBILITY OF THE ARCHITECT OR ENGINEER OF RECORD. 1X BUCK MUST BE PROPERLY SECURED TO TRANSFER ALL LOADS TO THE STRUCTURE, TO BE REVIEWED BY THE AHJ.
4. ALLOWABLE STRESS INCREASE OF 1/3 WAS NOT USED IN THE DESIGN OF THE PRODUCT SHOWN HEREIN. WIND LOAD DURATION FACTOR Cd=1.6 WAS USED FOR WOOD ANCHOR CALCULATIONS.
5. FRAME AND PANEL MATERIAL: ALUMINUM 6063–T6
6. UNITS MUST BE GLAZED PER ASTM E1300–04/09, SEE SHEET 9 FOR GLAZING OPTIONS.
7. APPROVED IMPACT PROTECTIVE SYSTEM <u>IS NOT REQUIRED</u> FOR THIS PRODUCT IN AREAS WHERE WIND BORNE DEBRIS PROTECTION IS REQUIRED.
8. APPROVED TO BE INSTALLED ON A 2 TRACK, 3 TRACK OR 4 TRACK FRAME SYSTEM WITH OR WITHOUT POCKETS.
9. ALL FRAME SYSTEMS, 2 TRACK, 3 TRACK AND 4 TRACK, WILL HAVE THE FOLLOWING ANCHOR QUANTITIES PER ANCHOR LOCATION:
   A. HEAD, SILL, JAMBS: 2 ANCHORS PER LOCATION
   B. HOOK STRIP: 1 ANCHOR PER LOCATION.
10. FOR ANCHORING INTO MASONRY/CONCRETE USE 1/4" ITW TAPCON (FY=100 KSI; FU=125 KSI) WITH SUFFICIENT LENGTH TO ACHIEVE A 1 1/4" MINIMUM EMBEDMENT INTO SUBSTRATE WITH 2 1/2" MINIMUM EDGE DISTANCE AND 1 3/8" MINIMUM SEPARATION. LOCATE ANCHORS AS SHOWN IN ELEVATIONS AND INSTALLATION DETAILS.
11. FOR ANCHORING INTO WOOD FRAMING, 2X BUCK OR WOOD BACKED STEEL STUD USE #10 (GRADE 5) WOOD SCREW WITH SUFFICIENT LENGTH TO ACHIEVE A 1 3/8" MINIMUM EMBEDMENT AND 3/4" MINIMUM EDGE DISTANCE INTO SUBSTRATE. LOCATE ANCHORS AS SHOWN IN ELEVATIONS AND INSTALLATION DETAILS.
12. SHIM AS REQUIRED AT EACH INSTALLATION ANCHOR WITH LOAD BEARING SHIM. SHIM WHERE SPACE OF 1/16" OR GREATER OCCURS. MAXIMUM ALLOWABLE SHIM TO BE 1/4".
13. ALL FASTENERS TO BE CORROSION RESISTANT.
14. INSTALLATION ANCHORS SHALL BE INSTALLED IN ACCORDANCE WITH ANCHOR MANUFACTURER'S INSTALLATION INSTRUCTIONS, AND ANCHORS SHALL NOT BE USED IN SUBSTRATES WITH STRENGTHS LESS THAN THE MINIMUM STRENGTH SPECIFIED BELOW:
   A. WOOD – MINIMUM SPECIFIC GRAVITY OF G=0.42
   B. CONCRETE – MINIMUM COMPRESSIVE STRENGTH OF 3,200 PSI.
   C. MASONRY – STRENGTH CONFORMANCE TO ASTM C–90, GRADE N, TYPE 1 (OR GREATER).
   D. METAL BACKED FRAMING – 20 GA (.040) MINIMUM THICKNESS (TO BE USED WITH WOOD FRAMING)

<u>PANEL CONSTRUCTION:</u>
ALL PANELS ARE CONSTRUCTED FROM EXTRUDED 6063–T6 ALUMINUM. VERTICAL STILES ARE NOTCHED TO RECEIVE HORIZONTAL RAILS. EACH RAIL IS SECURED TO STILES WITH (3) #10 x 1 1/4" SQ. DRIVE SCREW AT EACH END, B.O.M. ITEM #47. ALL PANELS HAVE A FIXED GLAZING STOP ON THE INTERIOR AND AN APPLIED GLAZING STOP ON THE EXTERIOR.

<u>FRAME CONSTRUCTION:</u>
EACH FRAME CORNER IS NOTCHED AND BUTTED. HEAD AND SILL ARE SECURED TO JAMBS WITH #8 x 1" TYPE F SCREW, B.O.M. ITEM #48, (2) AT EACH CORNER ON 2 TRACK FRAME, (3) AT EACH CORNER ON 3 TRACK FRAME AND (4) AT EACH CORNER ON 4 TRACK FRAME.

TABLE OF CONTENTS

SHEET NO.	DESCRIPTION
1	GENERAL NOTES
2-4	ELEVATIONS
5-6	DP & ANCHORAGE CHARTS
7	ANCORAGE DETAILS
8	BILL OF MATERIALS
9	GLAZING DETAILS
10-15	SECTION VIEWS
16-19	INSTALLATION DETAILS
20-21	EXTRUSIONS

PRODUCT REVISED
as complying with the Florida Building Code
NOA-No. 20-0806.05
Expiration Date 06/02/2025
By Ishaq I. Chanda
Miami-Dade Product Control

Revision: UPDATES FOR 2020 FBC. UPDATED MANUFACTURING ADDRESS. EK 7/24/20

WINDOOR® INCORPORATED
WINDOOR INCORPORATED
104 TRIPLE DIAMOND BLVD.
NORTH VENICE, FL 34275
(833) 554-5432

PREPARED BY A. LYNN MILLER
1070 TECHNOLOGY DRIVE
N. VENICE, FL 34275
(941) 480-1600
REGISTRATION #29296

Series	Desc.	Sheet	DWG No.	Rev.
SGD7000A	GENERAL NOTES	1 OF 21	SGD7000LMI-NOA	A

Title	Drawn By	Date
ALUMINUM SLIDING GLASS DOOR (LM)	ALAN KINNE	4/03/2020

ANTHONY LYNN MILLER
LICENSE
No. 58705
STATE OF FLORIDA
PROFESSIONAL ENGINEER
7/28/20

A. LYNN MILLER, P.E.
P.E.# 58705

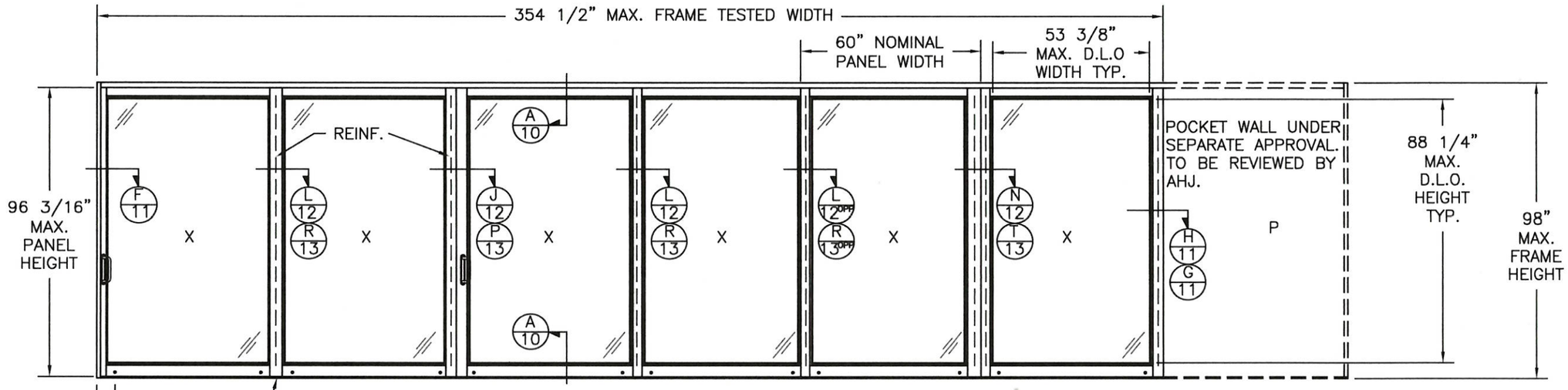

7000 SERIES LMI SGD (XXXXXXP)

6 PANEL UNIT SHOWN. UNLIMITED NUMBER OF PANELS IS APPLICABLE AS LONG AS INDIVIDUAL PANEL SIZE DOES NOT EXCEED MAXIMUM PANEL WIDTH & HEIGHT AND MAXIMUM FRAME AREA DOES NOT EXCEED 1.5x 241.26 SQ.FT. (TESTED AREA) = 361.88 SQ.FT. (MAX. FRAME AREA) AND USE VERTICAL CONDITIONS AS SHOWN.

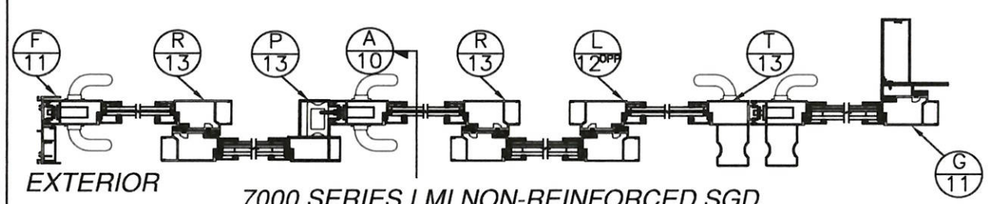

7000 SERIES LMI NON-REINFORCED SGD

2 TRACK LAYOUT

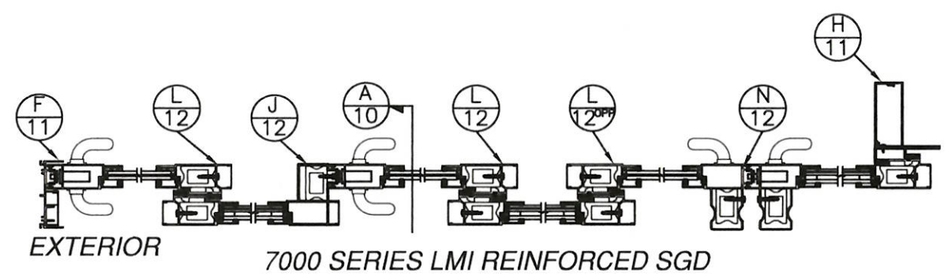

7000 SERIES LMI REINFORCED SGD

2 TRACK LAYOUT

NON-REINFORCED

DESIGN PRESSURE RATING	IMPACT RATING
±45.0PSF	LARGE MISSILE IMPACT

WITH 2-1/2" SILL RISER
FOR SMALLER UNIT SIZES, RATINGS & ANCHORAGE, SEE CHARTS 1-3, SHEET 5

REINFORCED

DESIGN PRESSURE RATING	IMPACT RATING
+45.0/-60.0PSF	LARGE MISSILE IMPACT

WITH 2-1/2" SILL RISER
FOR SMALLER UNIT SIZES, RATINGS & ANCHORAGE, SEE CHARTS 4-6, SHEET 5

REINFORCED

DESIGN PRESSURE RATING	IMPACT RATING
±60.0PSF	LARGE MISSILE IMPACT

WITH 3-1/8" SILL RISER
FOR SMALLER UNIT SIZES, RATINGS & ANCHORAGE, SEE CHARTS 7-9, SHEET 6

NOTES:
1. SEE CHART #10, SHEET 6 FOR POCKET JAMB (HOOK STRIP) ANCHORAGE.
2. RATINGS SHOWN ABOVE ARE INTO CONCRETE/MASONRY. SEE CHARTS 2, 5 & 8 FOR RATINGS INTO WOOD.

PANEL AND D.L.O. FORMULA
PANEL HEIGHT = UNIT HEIGHT − 1 9/16"
D.L.O. HEIGHT = PANEL HEIGHT − 7.9375"
D.L.O. WIDTH = PANEL WIDTH − 6.625"

PRODUCT REVISED
as complying with the Florida Building Code
NOA-No. 20-0806.05
Expiration Date 06/02/2025
By Ishaq I. Chanda
Miami-Dade Product Control

Revision: FRAME AREA LIMITED TO 1.5x TESTED AREA. EK 7/24/20

PREPARED BY A. LYNN MILLER
1070 TECHNOLOGY DRIVE
N. VENICE, FL 34275
(941) 480-1600
REGISTRATION #29296

WINDOOR® INCORPORATED
WINDOOR INCORPORATED
104 TRIPLE DIAMOND BLVD.
NORTH VENICE, FL 34275
(833) 554-5432

Series	Sheet	DWG No.	Drawn By	Date	Rev.
SGD7000A	2 OF 21	SGD7000LMI-NOA	ALAN KINNE	4/03/2020	A

Title: ALUMINUM SLIDING GLASS DOOR (LM)
Desc.: ELEVATIONS & DP AT MAX SIZE - 2T

ANTHONY LYNN MILLER
LICENSE
No. 58705
STATE OF FLORIDA
PROFESSIONAL ENGINEER
7/28/20

A. LYNN MILLER, P.E.
P.E.# 58705

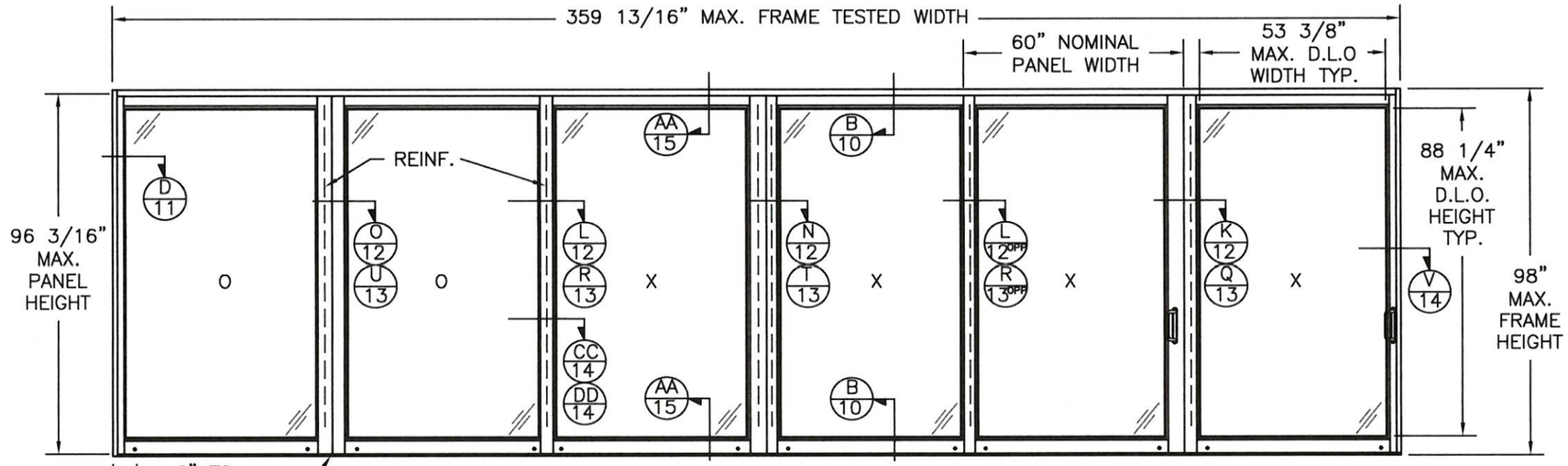

7000 SERIES LMI SGD (OOXXXX)

6 PANEL UNIT SHOWN. UNLIMITED NUMBER OF PANELS IS APPLICABLE AS LONG AS INDIVIDUAL PANEL SIZE DOES NOT EXCEED MAXIMUM PANEL WIDTH & HEIGHT AND MAXIMUM FRAME AREA DOES NOT EXCEED 1.5x 244.60 SQ.FT. (TESTED AREA) = 367.31 SQ.FT. (MAX. FRAME AREA) AND USE VERTICAL CONDITIONS AS SHOWN.

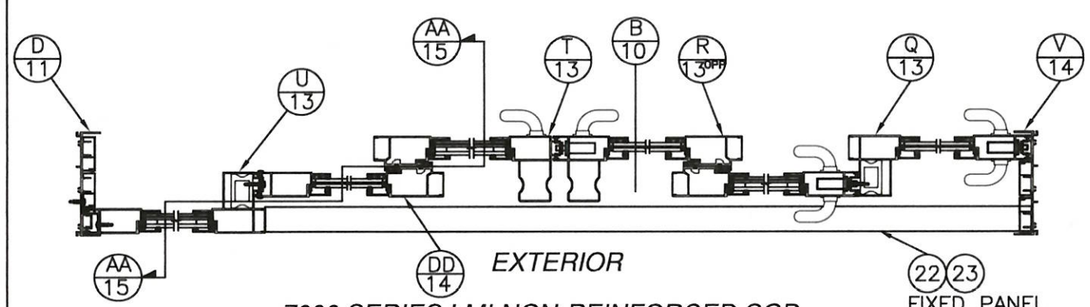

7000 SERIES LMI NON-REINFORCED SGD

3 TRACK LAYOUT

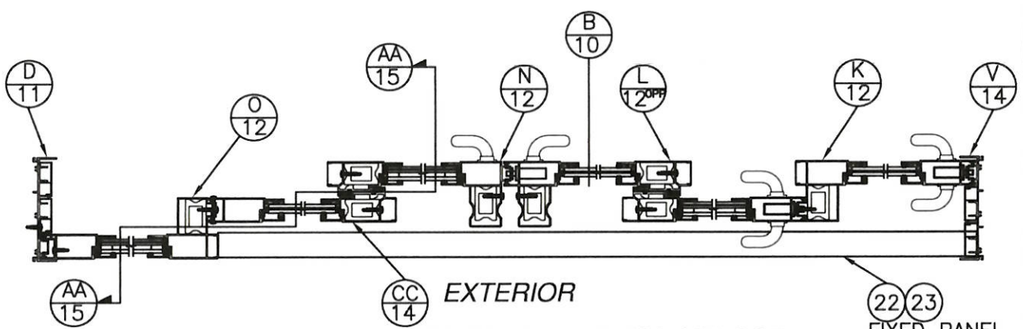

7000 SERIES LMI REINFORCED SGD

3 TRACK LAYOUT

NON-REINFORCED

DESIGN PRESSURE RATING	IMPACT RATING
±45.0PSF	LARGE MISSILE IMPACT

WITH 2-1/2" SILL RISER
FOR SMALLER UNIT SIZES, RATINGS & ANCHORAGE, SEE CHARTS 1-3, SHEET 5

REINFORCED

DESIGN PRESSURE RATING	IMPACT RATING
+45.0/-60.0PSF	LARGE MISSILE IMPACT

WITH 2-1/2" SILL RISER
FOR SMALLER UNIT SIZES, RATINGS & ANCHORAGE, SEE CHARTS 4-6, SHEET 5

REINFORCED

DESIGN PRESSURE RATING	IMPACT RATING
±60.0PSF	LARGE MISSILE IMPACT

WITH 3-1/8" SILL RISER
FOR SMALLER UNIT SIZES, RATINGS & ANCHORAGE, SEE CHARTS 7-9, SHEET 6

NOTES:
1. SEE CHART #10, SHEET 6 FOR POCKET JAMB (HOOK STRIP) ANCHORAGE.
2. RATINGS SHOWN ABOVE ARE INTO CONCRETE/MASONRY. SEE CHARTS 2, 5 & 8 FOR RATINGS INTO WOOD.

PANEL AND D.L.O. FORMULA
PANEL HEIGHT = UNIT HEIGHT – 1 9/16"
D.L.O. HEIGHT = PANEL HEIGHT – 7.9375"
D.L.O. WIDTH = PANEL WIDTH – 6.625"

PRODUCT REVISED
as complying with the Florida Building Code
NOA-No. 20-0806.05
Expiration Date 06/02/2025
By Ishaq I. Chanda
Miami-Dade Product Control

Revision: FRAME AREA LIMITED TO 1.5x TESTED AREA. EK 7/24/20

PREPARED BY A. LYNN MILLER
1070 TECHNOLOGY DRIVE
N. VENICE, FL 34275
(941) 480-1600
REGISTRATION #29296

WINDOOR® INCORPORATED
WINDOOR INCORPORATED
104 TRIPLE DIAMOND BLVD.
NORTH VENICE, FL 34275
(833) 554-5432

Series	Sheet	DWG No.	Drawn By	Date	Rev.
SGD7000A	3 OF 21	SGD7000LMI-NOA	ALAN KINNE	4/03/2020	A

Desc: ELEVATIONS & DP AT MAX SIZE - 3T
Title: ALUMINUM SLIDING GLASS DOOR (LM)

ANTHONY LYNN MILLER
LICENSE
No. 58705
STATE OF FLORIDA
PROFESSIONAL ENGINEER
7/28/20

A. LYNN MILLER, P.E.
P.E.# 58705

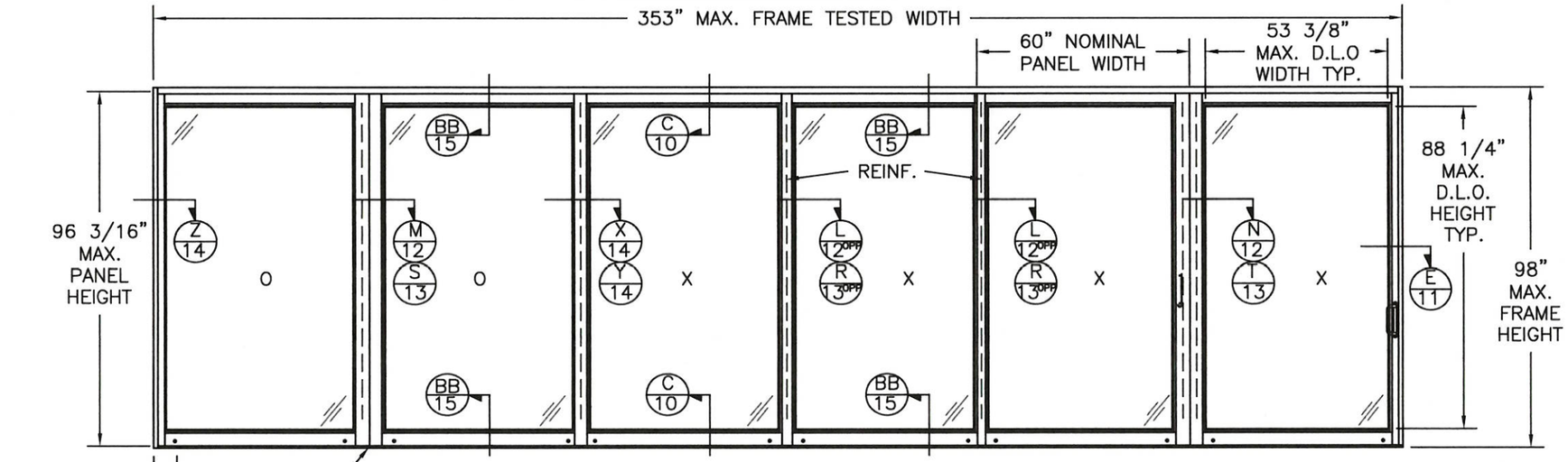

7000 SERIES LMI SGD (OOXXXX)

6 PANEL UNIT SHOWN. UNLIMITED NUMBER OF PANELS IS APPLICABLE AS LONG AS INDIVIDUAL PANEL SIZE DOES NOT EXCEED MAXIMUM PANEL WIDTH & HEIGHT AND MAXIMUM FRAME AREA DOES NOT EXCEED 1.5x 240.24 SQ.FT.(TESTED AREA) = 360.36 SQ.FT. (MAX. FRAME AREA) AND USE VERTICAL CONDITIONS AS SHOWN.

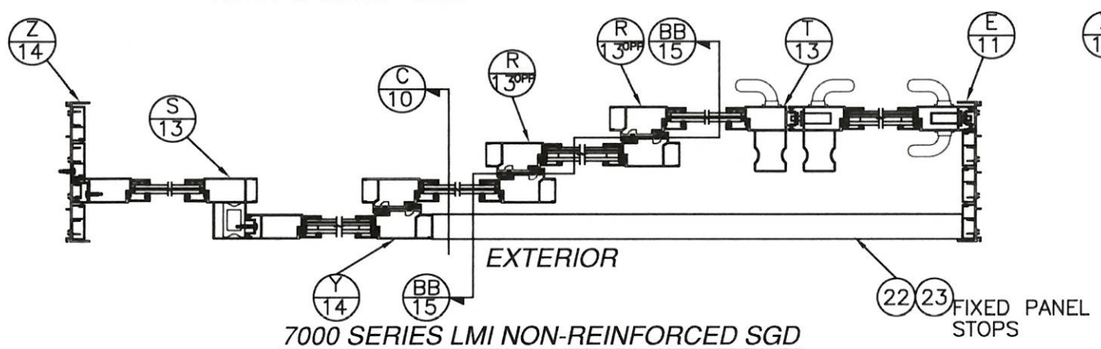

7000 SERIES LMI NON-REINFORCED SGD

4 TRACK LAYOUT

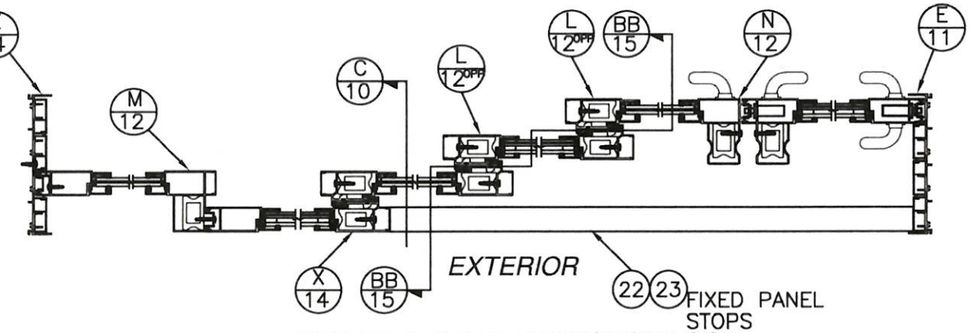

7000 SERIES LMI REINFORCED SGD

4 TRACK LAYOUT

NON-REINFORCED

DESIGN PRESSURE RATING	IMPACT RATING
±45.0PSF	LARGE MISSILE IMPACT

WITH 2-1/2" SILL RISER
FOR SMALLER UNIT SIZES, RATINGS & ANCHORAGE, SEE CHARTS 1-3, SHEET 5

REINFORCED

DESIGN PRESSURE RATING	IMPACT RATING
+45.0/-60.0PSF	LARGE MISSILE IMPACT

WITH 2-1/2" SILL RISER
FOR SMALLER UNIT SIZES, RATINGS & ANCHORAGE, SEE CHARTS 4-6, SHEET 5

REINFORCED

DESIGN PRESSURE RATING	IMPACT RATING
±60.0PSF	LARGE MISSILE IMPACT

WITH 3-1/8" SILL RISER
FOR SMALLER UNIT SIZES, RATINGS & ANCHORAGE, SEE CHARTS 7-9, SHEET 6

NOTES:
1. SEE CHART #10, SHEET 6 FOR POCKET JAMB (HOOK STRIP) ANCHORAGE.
2. RATINGS SHOWN ABOVE ARE INTO CONCRETE/MASONRY. SEE CHARTS 2, 5 & 8 FOR RATINGS INTO WOOD.

PANEL AND D.L.O. FORMULA
PANEL HEIGHT = UNIT HEIGHT − 1 9/16"
D.L.O. HEIGHT = PANEL HEIGHT − 7.9375"
D.L.O. WIDTH = PANEL WIDTH − 6.625"

PRODUCT REVISED
as complying with the Florida Building Code
NOA-No. 20-0806.05
Expiration Date 06/02/2025
By Ishwar I. Chanda
Miami-Dade Product Control

Revision: FRAME AREA LIMITED TO 1.5x TESTED AREA. EK 7/24/20

PREPARED BY A. LYNN MILLER
1070 TECHNOLOGY DRIVE
N. VENICE, FL 34275
(941) 480-1600
REGISTRATION #29296

WINDOOR® INCORPORATED
WINDOOR INCORPORATED
104 TRIPLE DIAMOND BLVD.
NORTH VENICE, FL 34275
(833) 554-5432

Series	Sheet	DWG No.	Drawn By	Date	Rev.
SGD7000A	4 OF 21	SGD7000LMI-NOA	ALAN KINNE	4/03/2020	A

Title: ALUMINUM SLIDING GLASS DOOR (LM)
Desc.: ELEVATIONS & DP AT MAX SIZE - 4T

ANTHONY LYNN MILLER LICENSE No. 58705 STATE OF FLORIDA PROFESSIONAL ENGINEER
7/28/20

A. LYNN MILLER, P.E.
P.E.# 58705

CHART #1
MASONRY/CONCRETE INSTALLATION - NON-REINFORCED - 2-1/2" SILL RISER

Maximum Design Pressure Capacity Chart (psf)														
Frame Height (in)	Panel Width (in)													
	24.0		30.0		36.0		42.0		48.0		54.0		60.0	
	Pos	Neg	Pos	Neg	Pos	Neg	Pos	Neg	Pos	Neg	Pos	Neg	Pos	Neg
82.0	60.0	60.0	60.0	60.0	60.0	60.0	60.0	60.0	60.0	60.0	60.0	60.0	58.8	58.8
84.0	60.0	60.0	60.0	60.0	60.0	60.0	60.0	60.0	60.0	60.0	59.6	59.6	56.7	56.7
96.0	60.0	60.0	60.0	60.0	60.0	60.0	58.3	58.3	53.1	53.1	49.3	49.3	46.4	46.4
98.0	60.0	60.0	60.0	60.0	60.0	60.0	56.8	56.8	51.7	51.7	47.9	47.9	45.0	45.0

CHART #2
WOOD INSTALLATION - NON-REINFORCED - 2-1/2" SILL RISER

Maximum Design Pressure Capacity Chart (psf)														
Frame Height (in)	Panel Width (in)													
	24.0		30.0		36.0		42.0		48.0		54.0		60.0	
	Pos	Neg	Pos	Neg	Pos	Neg	Pos	Neg	Pos	Neg	Pos	Neg	Pos	Neg
82.0	60.0	60.0	60.0	60.0	53.3	53.3	39.2	39.2	49.7	49.7	46.5	46.5	38.4	38.4
84.0	60.0	60.0	60.0	60.0	53.3	53.3	39.2	39.2	48.0	48.0	44.9	44.9	38.4	38.4
96.0	60.0	60.0	56.9	56.9	49.2	49.2	39.2	39.2	40.0	40.0	37.1	37.1	34.9	34.9
98.0	60.0	60.0	55.5	55.5	48.0	48.0	39.2	39.2	38.9	38.9	36.1	36.1	33.9	33.9

CHART #3
MASONRY/CONCRETE & WOOD INSTALLATION - NON-REINFORCED - 2-1/2" SILL RISER

Number of Anchor Locations Required (Pairs)																					
Frame Height (in)	Panel Width (in)																				
	24.0			30.0			36.0			42.0			48.0			54.0			60.0		
	H&S	Jamb	Cluster	H&S	Jamb	Cluster	H&S	Jamb	Cluster	H&S	Jamb	Cluster	H&S	Jamb	Cluster	H&S	Jamb	Cluster	H&S	Jamb	Cluster
82.0	1	7	4	1	7	4	1	7	4	1	7	4	2	7	4	2	7	4	2	7	4
84.0	1	7	4	1	7	4	1	7	4	1	7	4	2	7	4	2	7	4	2	7	4
96.0	1	8	4	1	8	4	1	8	4	1	8	4	2	8	4	2	8	4	2	8	4
98.0	1	8	4	1	8	4	1	8	4	1	8	4	2	8	4	2	8	4	2	8	4

CHART #4
MASONRY/CONCRETE INSTALLATION - REINFORCED - 2-1/2" SILL RISER

Maximum Design Pressure Capacity Chart (psf)														
Frame Height (in)	Panel Width (in)													
	24.0		30.0		36.0		42.0		48.0		54.0		60.0	
	Pos	Neg	Pos	Neg	Pos	Neg	Pos	Neg	Pos	Neg	Pos	Neg	Pos	Neg
82.0	60.0	75.0	60.0	75.0	60.0	75.0	60.0	75.0	60.0	75.0	60.0	75.0	58.8	75.0
84.0	60.0	75.0	60.0	75.0	60.0	75.0	60.0	75.0	60.0	75.0	59.6	75.0	56.7	75.0
96.0	60.0	75.0	60.0	75.0	60.0	75.0	58.3	75.0	53.1	70.8	49.3	65.7	46.4	61.8
98.0	60.0	75.0	60.0	75.0	60.0	75.0	56.8	75.0	51.7	68.9	47.9	63.8	45.0	60.0

CHART #5
WOOD INSTALLATION - REINFORCED - 2-1/2" SILL RISER

Maximum Design Pressure Capacity Chart (psf)														
Frame Height (in)	Panel Width (in)													
	24.0		30.0		36.0		42.0		48.0		54.0		60.0	
	Pos	Neg	Pos	Neg	Pos	Neg	Pos	Neg	Pos	Neg	Pos	Neg	Pos	Neg
82.0	60.0	75.0	60.0	68.8	53.3	53.3	54.0	54.0	49.7	49.7	47.4	47.4	57.6	57.6
84.0	60.0	75.0	60.0	66.8	53.3	53.3	52.2	52.2	48.0	48.0	47.4	47.4	56.7	57.6
96.0	60.0	68.6	56.9	56.9	49.2	49.2	58.3	65.8	53.1	60.0	47.4	47.4	46.4	52.4
98.0	60.0	67.0	55.5	55.5	48.0	48.0	56.8	64.1	51.7	58.4	47.4	47.4	38.4	38.4

CHART #6
MASONRY/CONCRETE & WOOD INSTALLATION - REINFORCED - 2-1/2" SILL RISER

Number of Anchor Locations Required (Pairs)																					
Frame Height (in)	Panel Width (in)																				
	24.0			30.0			36.0			42.0			48.0			54.0			60.0		
	H&S	Jamb	Cluster	H&S	Jamb	Cluster	H&S	Jamb	Cluster	H&S	Jamb	Cluster	H&S	Jamb	Cluster	H&S	Jamb	Cluster	H&S	Jamb	Cluster
82.0	1	7	4	1	7	4	1	7	4	2	7	4	2	7	4	2	7	6	3	7	6
84.0	1	7	4	1	7	4	1	7	4	2	7	4	2	7	4	2	7	6	3	7	6
96.0	1	8	4	1	8	4	1	8	4	2	8	6	2	8	6	2	8	6	3	8	6
98.0	1	8	4	1	8	4	1	8	4	2	8	6	2	8	6	2	8	6	2	8	6

NOTE:

1. TWO (2) ANCHORS PER LOCATION IS REQUIRED. TOTAL NUMBER OF ANCHORS MUST BE TWICE THE NUMBER OF ANCHORS SHOWN IN CHARTS. EXCEPT FOR POCKET JAMB ANCHORS.
   EXAMPLE:
   ANCHORS FOR A UNIT WITH 24" WIDE PANELS AND 98" FRAME HEIGHT (SEE CHARTS #3 AND #10 POCKET JAMB).
   - HEAD INTERMEDIATE ANCHOR LOCATIONS: 1 — TOTAL HEAD ANCHORS: 2
   - JAMB ANCHOR LOCATIONS: 8 — TOTAL JAMB ANCHORS: 16
   - SILL INTERMEDIATE ANCHOR LOCATIONS: 1 — TOTAL SILL ANCHORS: 2
   - ICLUSTER ANCHOR LOCATIONS: 4 — TOTAL ICLUSTER ANCHORS: 8
   - POCKET ANCHOR LOCATIONS: 9 — TOTAL POCKET ANCHORS: 9

PRODUCT REVISED
as complying with the Florida Building Code
NOA-No. 20-0806.05
Expiration Date 06/02/2025
By Ishwar I. Chanda
Miami-Dade Product Control

Revision: NO CHANGES THIS SHEET. EK 7/24/20

PREPARED BY A. LYNN MILLER
1070 TECHNOLOGY DRIVE
N. VENICE, FL 34275
(941) 480-1600
REGISTRATION #29296

Date: 4/03/2020
Drawn By: ALAN KINNE
Rev.: A
DWG No.: SGD7000LMI-NOA
Sheet: 5 OF 21
Series: SGD7000A
Desc.: DP & ANCHOR CHARTS - 2-1/2" RISER
Title: ALUMINUM SLIDING GLASS DOOR (LM)

WINDOOR® INCORPORATED
WINDOOR INCORPORATED
104 TRIPLE DIAMOND BLVD.
NORTH VENICE, FL 34275
(833) 554-5432

ANTHONY LYNN MILLER
LICENSE
No. 58705
STATE OF FLORIDA
PROFESSIONAL ENGINEER
7/28/20

A. LYNN MILLER, P.E.
P.E.# 58705

CHART #7
MASONRY/CONCRETE INSTALLATION - REINFORCED - 3-1/8" SILL RISER

Maximum Design Pressure Capacity Chart (psf)														
Frame Height (in)	Panel Width (in)													
	24.0		30.0		36.0		42.0		48.0		54.0		60.0	
	Pos	Neg	Pos	Neg	Pos	Neg	Pos	Neg	Pos	Neg	Pos	Neg	Pos	Neg
82.0	75.0	75.0	75.0	75.0	75.0	75.0	75.0	75.0	75.0	75.0	75.0	75.0	75.0	75.0
84.0	75.0	75.0	75.0	75.0	75.0	75.0	75.0	75.0	75.0	75.0	75.0	75.0	75.0	75.0
96.0	75.0	75.0	75.0	75.0	75.0	75.0	75.0	75.0	70.8	70.8	65.7	65.7	61.8	61.8
98.0	75.0	75.0	75.0	75.0	75.0	75.0	75.0	75.0	68.9	68.9	63.8	63.8	60.0	60.0

CHART #8
WOOD INSTALLATION - REINFORCED - 3-1/8" SILL RISER

Maximum Design Pressure Capacity Chart (psf)														
Frame Height (in)	Panel Width (in)													
	24.0		30.0		36.0		42.0		48.0		54.0		60.0	
	Pos	Neg	Pos	Neg	Pos	Neg	Pos	Neg	Pos	Neg	Pos	Neg	Pos	Neg
82.0	75.0	75.0	68.8	68.8	53.3	53.3	54.0	54.0	49.7	49.7	47.4	47.4	57.6	57.6
84.0	75.0	75.0	66.8	66.8	53.3	53.3	52.2	52.2	48.0	48.0	47.4	47.4	57.6	57.6
96.0	68.6	68.6	56.9	56.9	49.2	49.2	65.8	65.8	60.0	60.0	47.4	47.4	52.4	52.4
98.0	67.0	67.0	55.5	55.5	48.0	48.0	64.1	64.1	58.4	58.4	47.4	47.4	38.4	38.4

CHART #9
MASONRY/CONCRETE & WOOD INSTALLATION - REINFORCED - 3-1/8" SILL RISER

Number of Anchor Locations Required (Pairs)																					
Frame Height (in)	Panel Width (in)																				
	24.0			30.0			36.0			42.0			48.0			54.0			60.0		
	H&S	Jamb	Cluster	H&S	Jamb	Cluster	H&S	Jamb	Cluster	H&S	Jamb	Cluster	H&S	Jamb	Cluster	H&S	Jamb	Cluster	H&S	Jamb	Cluster
82.0	1	7	4	1	7	4	1	7	4	2	7	4	2	7	4	2	7	6	3	7	6
84.0	1	7	4	1	7	4	1	7	4	2	7	4	2	7	4	2	7	6	3	7	6
96.0	1	8	4	1	8	4	1	8	4	2	8	6	2	8	6	2	8	6	3	8	6
98.0	1	8	4	1	8	4	1	8	4	2	8	6	2	8	6	2	8	6	2	8	6

CHART #10
POCKET JAMB (HOOK STRIP) ANCHORS

Number of Anchor Locations Required (Single)							
Frame Height (in)	Panel Width (in)						
	24.0	30.0	36.0	42.0	48.0	54.0	60.0
	Hook	Hook	Hook	Hook	Hook	Hook	Hook
82.0	8	8	8	8	8	8	8
84.0	8	8	8	8	8	8	8
96.0	9	9	9	9	9	9	9
98.0	9	9	9	9	9	9	9

NOTE:

1. TWO (2) ANCHORS PER LOCATION IS REQUIRED. TOTAL NUMBER OF ANCHORS MUST BE TWICE THE NUMBER OF ANCHORS SHOWN IN CHARTS. EXCEPT FOR POCKET JAMB ANCHORS.
   EXAMPLE:
   ANCHORS FOR A UNIT WITH 24" WIDE PANELS AND 98" FRAME HEIGHT (SEE CHARTS #3 AND #10 POCKET JAMB).
   - HEAD INTERMEDIATE ANCHOR LOCATIONS: 1 — TOTAL HEAD ANCHORS: 2
   - JAMB ANCHOR LOCATIONS: 8 — TOTAL JAMB ANCHORS: 16
   - SILL INTERMEDIATE ANCHOR LOCATIONS: 1 — TOTAL SILL ANCHORS: 2
   - ICLUSTER ANCHOR LOCATIONS: 4 — TOTAL ICLUSTER ANCHORS: 8
   - POCKET ANCHOR LOCATIONS: 9 — TOTAL POCKET ANCHORS: 9

PRODUCT REVISED
as complying with the Florida Building Code
NOA-No. 20-0806.05
Expiration Date 06/02/2025
By Ishaq I. Chanda
Miami-Dade Product Control

Revision: NO CHANGES THIS SHEET. EK 7/24/20

PREPARED BY A. LYNN MILLER
1070 TECHNOLOGY DRIVE
N. VENICE, FL 34275
(941) 480-1600
REGISTRATION #29296

Date: 4/03/2020
Drawn By: ALAN KINNE
Rev.: A

WINDOOR® INCORPORATED

WINDOOR INCORPORATED
104 TRIPLE DIAMOND BLVD.
NORTH VENICE, FL 34275
(833) 554-5432

Title: ALUMINUM SLIDING GLASS DOOR (LM)
Desc.: DP & ANCHOR CHARTS - 3-1/8" RISER
DWG No.: SGD7000LMI-NOA
Series: SGD7000A
Sheet: 6 OF 21

ANTHONY LYNN MILLER
LICENSE
No. 58705
STATE OF FLORIDA
PROFESSIONAL ENGINEER
7/28/20

A. LYNN MILLER, P.E.
P.E.# 58705

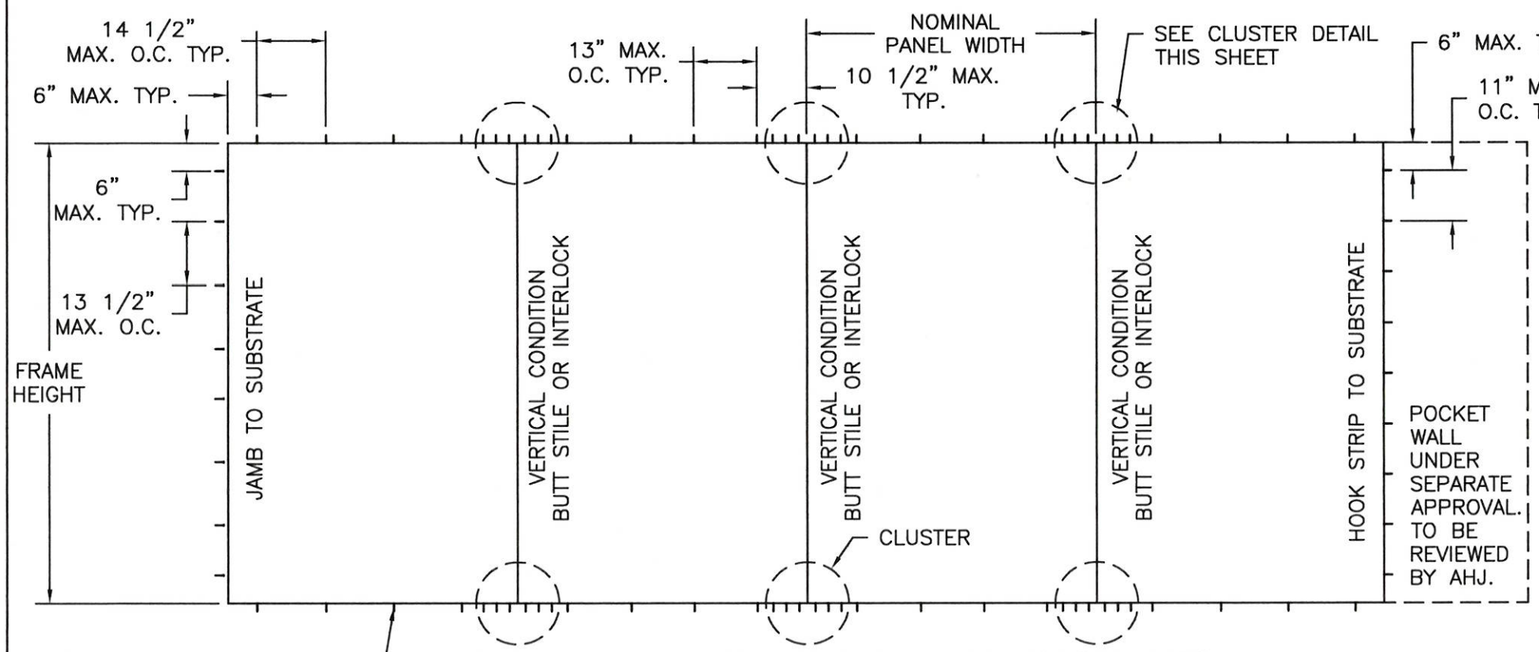

ANCHORING LAYOUT NON-REINFORCED & REINFORCED UNITS

4 PANEL UNIT SHOWN, APPLICABLE TO ALL CONFIGURATIONS USING THE SAME ANCHOR CLUSTER AND PATTERN

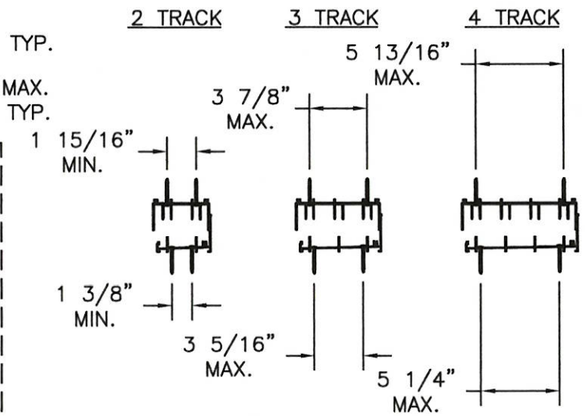

ANCHORAGE LOCATIONS NON-REINFORCED AND REINFORCED AT HEAD AND SILL.
(FOR FURTHER DETAILS SEE SHEETS 16–18)

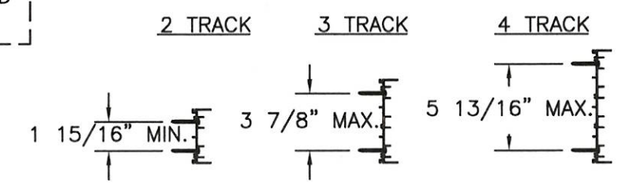

ANCHORAGE LOCATIONS NON-REINFORCED AND REINFORCED AT JAMBS.
(FOR FURTHER DETAILS SEE SHEETS 16–18)

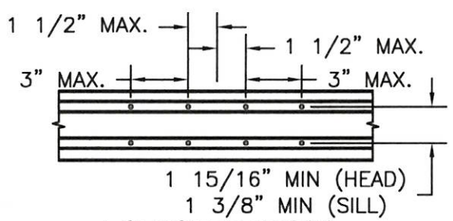

4 CLUSTER DETAIL
2-TRACK HEAD & SILL

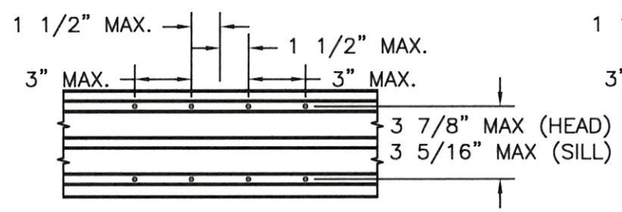

4 CLUSTER DETAIL
3-TRACK HEAD & SILL

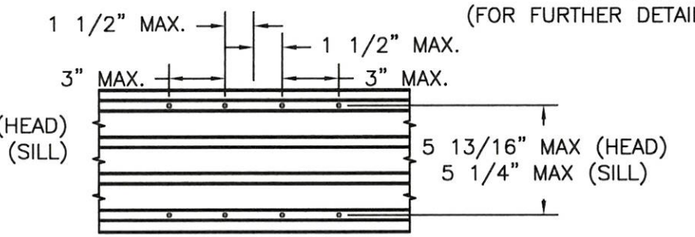

4 CLUSTER DETAIL
4-TRACK HEAD & SILL

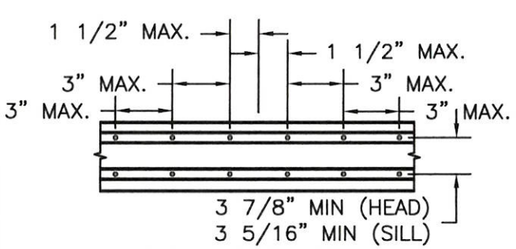

6 CLUSTER DETAIL
2-TRACK HEAD & SILL

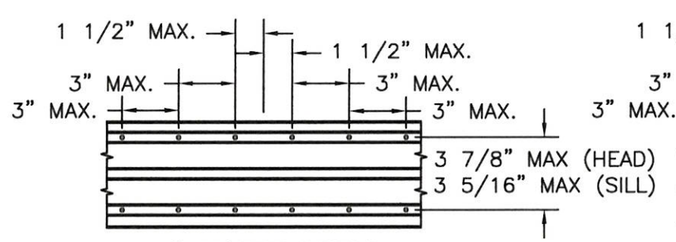

6 CLUSTER DETAIL
3-TRACK HEAD & SILL

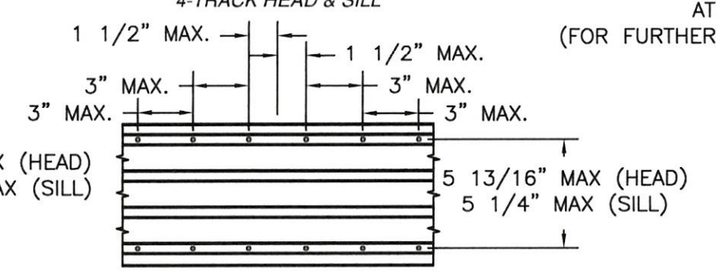

6 CLUSTER DETAIL
4-TRACK HEAD & SILL

POCKET

ANCHORAGE LOCATIONS NON-REINFORCED & REINFORCED AT HOOK STRIP
(FOR FURTHER DETAILS SEE SHEET 19)

ANCHOR QUANTITIES:

1. HOOKSTRIP – SEE CHART #10, SHEET 6.
2. JAMBS, H/S INTERMEDIATE & H/S CLUSTER – SEE CHARTS #3, #6 & #9 ON SHEETS 5–6.

PRODUCT REVISED
as complying with the Florida Building Code
NOA-No. 20-0806.05
Expiration Date 06/02/2025
By Ishaq I. Chanda
Miami-Dade Product Control

Revision: NO CHANGES THIS SHEET. EK 7/24/20

PREPARED BY A. LYNN MILLER
1070 TECHNOLOGY DRIVE
N. VENICE, FL 34275
(941) 480-1600
REGISTRATION #29296

WINDOOR® INCORPORATED
WINDOOR INCORPORATED
104 TRIPLE DIAMOND BLVD.
NORTH VENICE, FL 34275
(833) 554-5432

Rev.	A
Date	4/03/2020
Drawn By	ALAN KINNE
DWG No.	SGD7000LMI-NOA
Sheet	7 OF 21
Series	SGD7000A
Title	ALUMINUM SLIDING GLASS DOOR (LM)
Desc.	ANCHORAGE DETAILS

ANTHONY LYNN MILLER LICENSE No. 58705 STATE OF FLORIDA PROFESSIONAL ENGINEER
7/28/20

A. LYNN MILLER, P.E.
P.E.# 58705

BILL OF MATERIALS

ITEM NO.	PART NUMBER	DESCRIPTION	MANUFACTURER	MATERIAL
1	FS-04522	2 TRACK FRAME HEAD	KEYMARK	ALUMINUM 6063-T6
2	FS-04531	2 TRACK FRAME JAMB	KEYMARK	ALUMINUM 6063-T6
3	FS-04525	2 TRACK SILL PAN WITH 2-1/2" RISER	KEYMARK	ALUMINUM 6063-T6
4	FS-04526	2 TRACK SILL PAN WITH 3-1/8" RISER	KEYMARK	ALUMINUM 6063-T6
5	FS-04529	2 TRACK FRAME SILL PAN INSERT	KEYMARK	ALUMINUM 6063-T6
6	FS-04511	3 TRACK FRAME HEAD	KEYMARK	ALUMINUM 6063-T6
7	FS-04510	3 TRACK FRAME JAMB	KEYMARK	ALUMINUM 6063-T6
8	FS-04506	3 TRACK SILL PAN WITH 2-1/2" RISER	KEYMARK	ALUMINUM 6063-T6
9	FS-04507	3 TRACK SILL PAN WITH 3-1/8" RISER	KEYMARK	ALUMINUM 6063-T6
10	FS-04508	3 TRACK FRAME SILL PAN INSERT	KEYMARK	ALUMINUM 6063-T6
11	FS-04523	4 TRACK FRAME HEAD	KEYMARK	ALUMINUM 6063-T6
12	FS-04532	4 TRACK FRAME JAMB	KEYMARK	ALUMINUM 6063-T6
13	FS-04527	4 TRACK SILL PAN WITH 2-1/2" RISER	KEYMARK	ALUMINUM 6063-T6
14	FS-04528	4 TRACK SILL PAN WITH 3-1/8" RISER	KEYMARK	ALUMINUM 6063-T6
15	FS-04530	4 TRACK FRAME SILL PAN INSERT	KEYMARK	ALUMINUM 6063-T6
16	FS-04313	FRAME HEAD TRACK COVER	KEYMARK	ALUMINUM 6063-T6
17	FS-04501	RECESSED JAMB TRACK COVER	KEYMARK	ALUMINUM 6063-T6
18	FS-04509	FLUSH JAMB COVER	KEYMARK	ALUMINUM 6063-T6
19	FS-03684	HOOK STRIP BASE	KEYMARK	ALUMINUM 6063-T6
20	FS-04476	HOOK STRIP WALL COVER	KEYMARK	ALUMINUM 6063-T6
21	FS-04477	HOOK STRIP WALL MOUNT	KEYMARK	ALUMINUM 6063-T6
22	FS-04535	PANEL STOP SILL COVER	KEYMARK	ALUMINUM 6063-T6
23	FS-04332	PANEL STOP HEAD COVER	KEYMARK	ALUMINUM 6063-T6
24	FS-04631	TOP AND BOTTOM RAIL	KEYMARK	ALUMINUM 6063-T6
25	FS-04327	PANEL LOCK/PLAIN STILE	KEYMARK	ALUMINUM 6063-T6
26	FS-04516	PANEL INTERLOCK STILE LEFT	KEYMARK	ALUMINUM 6063-T6
27	FS-04515	PANEL INTERLOCK STILE RIGHT	KEYMARK	ALUMINUM 6063-T6
28	FS-04789	MALE BUTT STILE	KEYMARK	ALUMINUM 6063-T6
29	FS-04790	LOCKING BUTT STILE	KEYMARK	ALUMINUM 6063-T6
30	FS-04505	INTERIOR FIXED BUTT STILE	KEYMARK	ALUMINUM 6063-T6
31	FS-04504	EXTERIOR FIXED BUTT STILE	KEYMARK	ALUMINUM 6063-T6
32	FS-04503	INTERLOCK REINF. BAR, FULL LENGTH	KEYMARK	ALUMINUM 6005-T5
33	FS-04312	BUTT STILE/INTERLOCK COVER	KEYMARK	ALUMINUM 6063-T6
34	FS-04533	9/16" GLASS STOP	KEYMARK	ALUMINUM 6063-T6
35	FS-04524	3/4" GLASS STOP	KEYMARK	ALUMINUM 6063-T6
36	5000 SS PDR	TANDEM ROLLER SS		
37	2186MI-INT	TRADITIONAL INTERNAL HANDLE		

BILL OF MATERIALS

ITEM NO.	PART NUMBER	DESCRIPTION	MANUFACTURER	MATERIAL
38	2186MI-DM	TRADITIONAL EXTERIOR HANDLE		
39	7014 SS DLPA	DUAL POINT MORTISE LOCK SET		
40	OW11023	RUBBER PANEL BUMPER		
41	V-INT TP 876	INTERLOCK BUMPER		
42		#8 x 1-1/4" SQ. DRIVE SCREW		18-8 STAINLESS
43	PJS-7623-09-SN	SCREEN ROLLER	SULLIVAN	
44		GLAZING, SEE SHT. 9 FOR DETAILS		
45		#8 x 1/4" PH IYPE F SCREW		STAINLESS STEEL
46		#8 x 3/4" PH TEK SCREW		410 STAINLESS
47		#10 x 1-1/4" SQ. DRIVE SCREW		18-8 STAINLESS
48		#8 x 1" PH IYP F SCREW		STAINLES STEEL
49		#10 x 1" PH TEK SCREW		ALUMINUM 6063-T6
50		#10 CUT THREAD WOOD SCREW		
51		3/16 " ITW TAPCON	ITW BUILDEX	CARBON STAINLESS
52	FH-02300	WS SCREEN BOTTOM RAIL	KEYMARK	ALUMINUM 6063-T6
53	FH-02300	WS SCREEN TOP RAIL	KEYMARK	ALUMINUM 063-T6
54	GS-VN-07A	3/16" GLASS STOP VINYL		VINYL
55	GS-VN-06A	1/4" GLASS STOP VINYL		VINYL
56	GS-VN-05A	3/4" GLASS STOP VINYL & FIXED		VINYL
57	FH-02395	WS SCREEN STILE	KEYMARK	ALUMINUM 6063-T6
58	W332217KOOOO	.220" FIN WEATHERSTRIP		
59	W234017KOOOO	.400" FIN WEATHERSTRIP		
60	W333517KOOOO	.350" FIN WEATHERSTRIP		
61		GLASS SETTING BLOCK		
62		SIKA 552, DOW 791, DOW 983	SIKA/DOW	POLYURETHANE/SILICONE
63		SILICONE CAULK	PECORA	SILICONE
64		WEEP COVER/GATE		
65		#8 x 3/8" PH IYPE F SCREW		STAINLESS STEEL
66		#8 x 3/4" PH TEX SCREW		STAINLESS STEEL
67	FS-02209	WS SCREEN SWEEP	KEYMARK	ALUMINUM 6063-T6
68	SGD200	SCREEN HANDLE & LOCK	SULIVAN	
69		FIBERGLASS SCEEN MESH		FIBERGLASS
70		SCREEN SPLINE		
71		ALUMINUM 3/8" NOMINAL SPACER	HELIMA	ALUMINUM
72	FS-04791	FIXED PANEL Z-CLIP	KEYMARK	ALUMINUM 6063-T6
73		#10 x 3/4" PPH TEK SCREW		STAINLESS STEEL

PRODUCT REVISED
as complying with the Florida Building Code
NOA-No. 20-0806.05
Expiration Date 06/02/2025
By Ishaq I. Chanda
Miami-Dade Product Control

Revision: ADDED DOW 791 AND DOW 983 TO BOM. EK 7/24/20

PREPARED BY A. LYNN MILLER
1070 TECHNOLOGY DRIVE
N. VENICE, FL 34275
(941) 480-1600
REGISTRATION #29296

Date: 4/03/2020
Rev.: A
Drawn By: ALAN KINNE
DWG No.: SGD7000LMI-NOA

WINDOOR® INCORPORATED

WINDOOR INCORPORATED
104 TRIPLE DIAMOND BLVD.
NORTH VENICE, FL 34275
(833) 554-5432

Title: ALUMINUM SLIDING GLASS DOOR (LM)
Desc.: BILL OF MATERIALS
Sheet: 8 OF 21
Series: SGD7000A

ANTHONY LYNN MILLER
LICENSE
No. 58705
STATE OF FLORIDA
PROFESSIONAL ENGINEER
7/28/20

A. LYNN MILLER, P.E.
P.E.# 58705

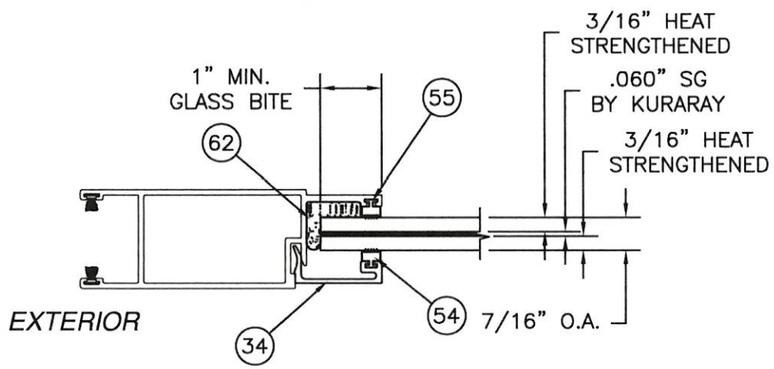

GLAZING TYPE A

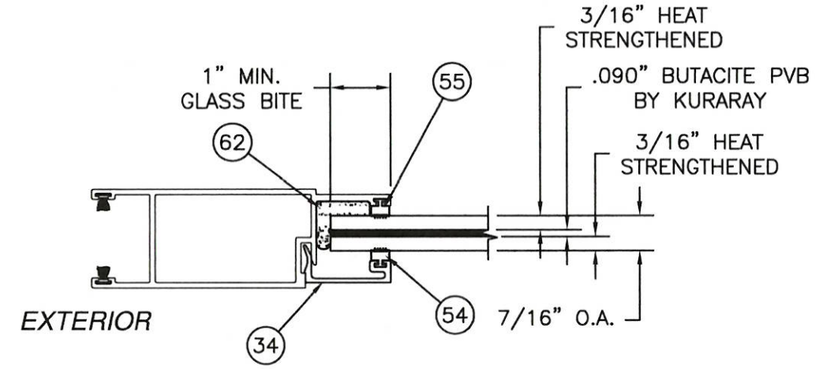

GLAZING TYPE B

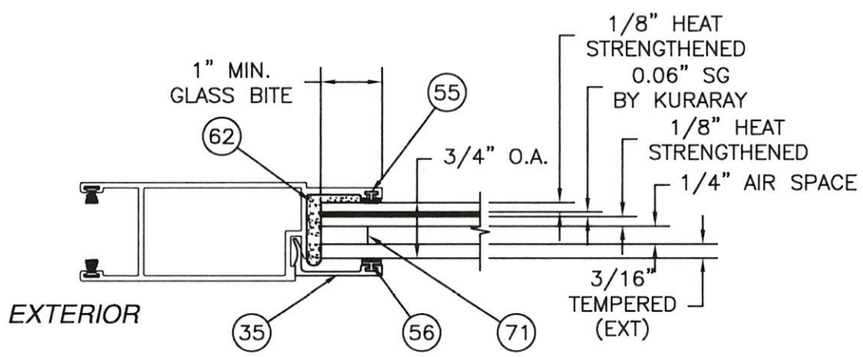

GLAZING TYPE C

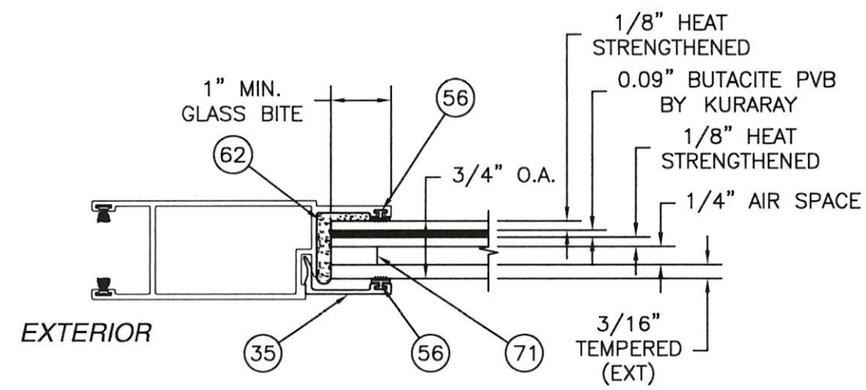

GLAZING TYPE D

PRODUCT REVISED
as complying with the Florida Building Code
NOA-No. 20-0806.05
Expiration Date 06/02/2025
By Ishaq I. Chanda
Miami-Dade Product Control

Revision:
NO CHANGES THIS SHEET.
EK 7/24/20

PREPARED BY A. LYNN MILLER
1070 TECHNOLOGY DRIVE
N. VENICE, FL 34275
(941) 480-1600
REGISTRATION #29296

WINDOOR® INCORPORATED

WINDOOR INCORPORATED
104 TRIPLE DIAMOND BLVD.
NORTH VENICE, FL 34275
(833) 554-5432

Title	Date	Rev.
ALUMINUM SLIDING GLASS DOOR (LM)	4/03/2020	A

Desc.	Drawn By	DWG No.	Sheet
GLAZING DETAILS	ALAN KINNE	SGD7000LMI-NOA	9 OF 21

Series
SGD7000A

ANTHONY LYNN MILLER
LICENSE
No. 58705
STATE OF FLORIDA
PROFESSIONAL ENGINEER
7/28/20

A. LYNN MILLER, P.E.
P.E.# 58705

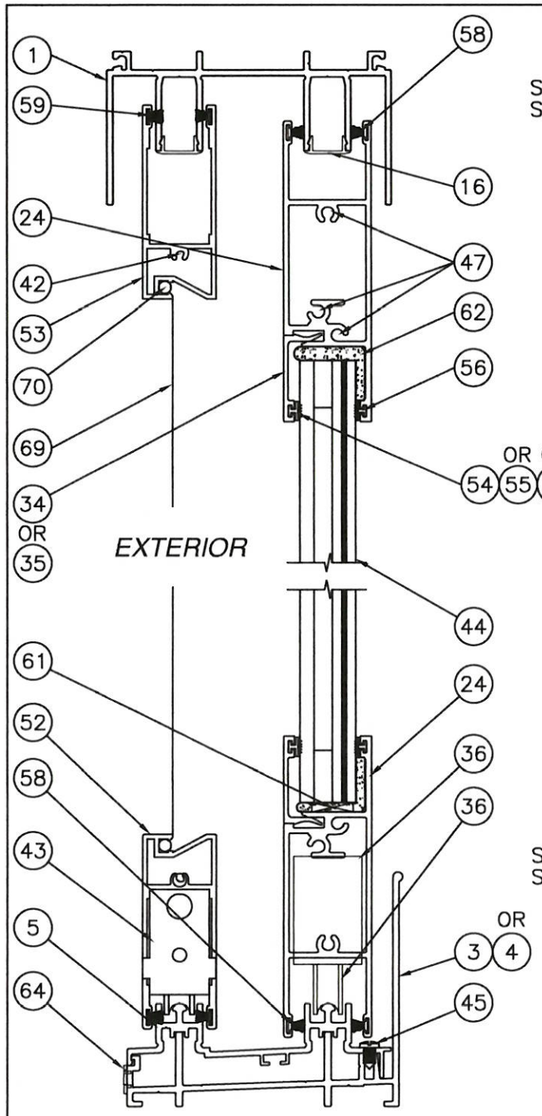

VERTICAL CROSS SECTION A

2 TRACK FRAME SYSTEM

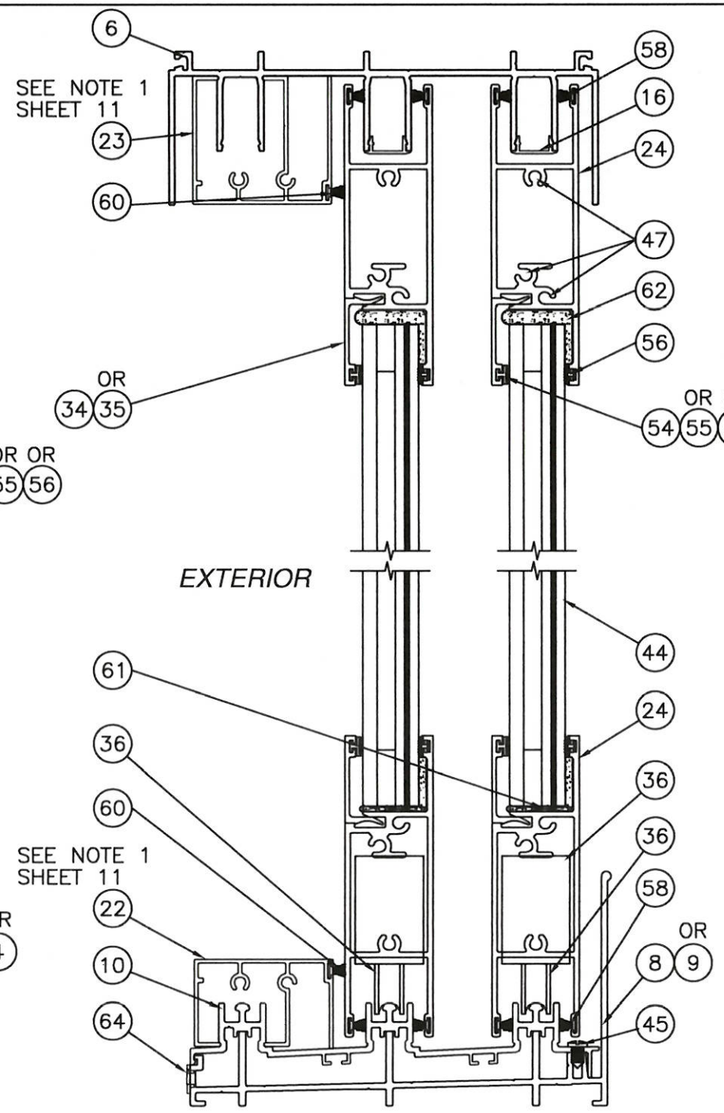

VERTICAL CROSS SECTION B

3 TRACK FRAME SYSTEM

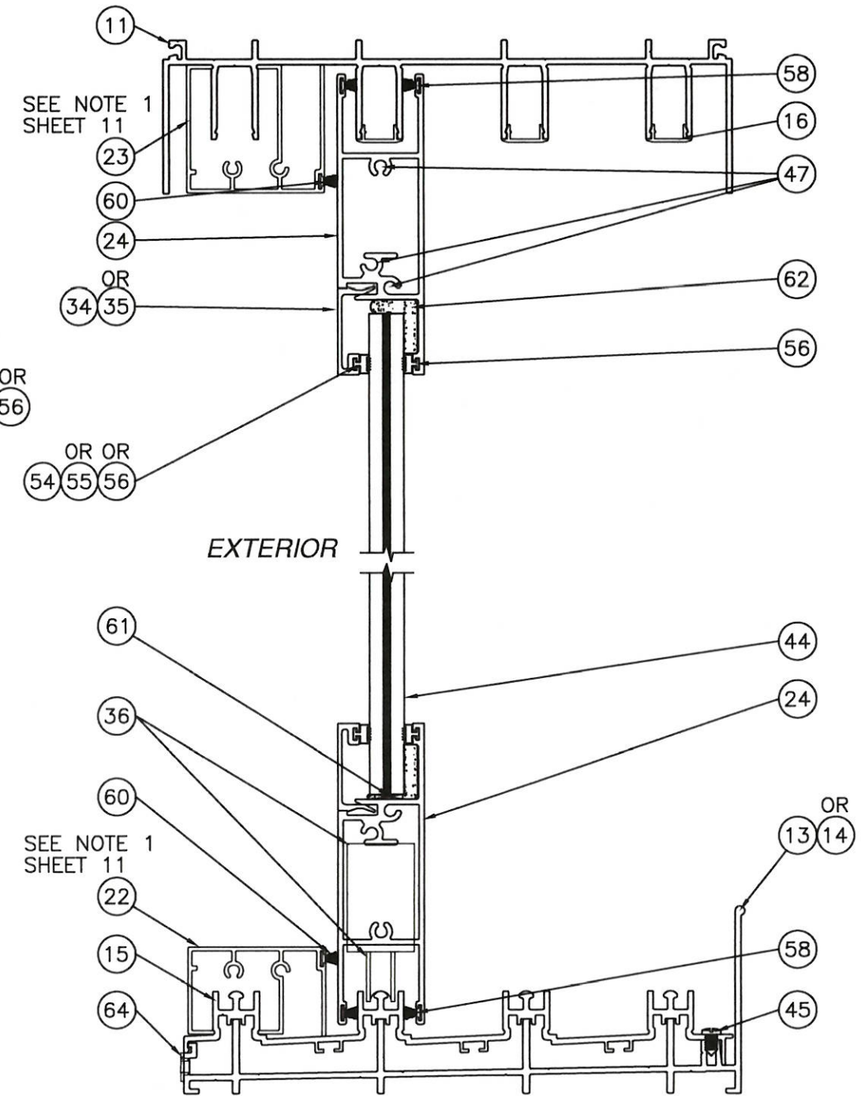

VERTICAL CROSS SECTION C

4 TRACK FRAME SYSTEM

NOTES:

1. THE WS SCREEN IS SHOWN IN THE 2 TRACK UNIT AS APPLICABLE AT EXTERIOR TRACK. IT IS QUALIFIED TO BE INSTALLED ON THE 3 TRACK AND 4 TRACK UNITS ALSO.
2. SEE SHEETS 16–18 FOR TYPICAL ANCHORAGE TO VARIOUS SUBSTRATES.

PRODUCT REVISED
as complying with the Florida Building Code
NOA-No. 20-0806.05
Expiration Date 06/02/2025
By Ishwar I. Chanda
Miami-Dade Product Control

Revision: NO CHANGES THIS SHEET. EK 7/24/20

PREPARED BY A. LYNN MILLER
1070 TECHNOLOGY DRIVE
N. VENICE, FL 34275
(941) 480-1600
REGISTRATION #29296

WINDOOR® INCORPORATED
WINDOOR INCORPORATED
104 TRIPLE DIAMOND BLVD.
NORTH VENICE, FL 34275
(833) 554-5432

Series	Sheet	DWG No.	Drawn By	Date	Rev.
SGD7000A	10 OF 21	SGD7000LMI-NOA	ALAN KINNE	4/03/2020	A

Desc.: SECTION VIEWS - VERTICAL

Title: ALUMINUM SLIDING GLASS DOOR (LM)

ANTHONY LYNN MILLER
LICENSE
No. 58705
STATE OF FLORIDA
PROFESSIONAL ENGINEER
7/28/20

A. LYNN MILLER, P.E.
P.E.# 58705

NON–REINFORCED/ REINFORCED UNITS
OPERABLE JAMB CONDITION

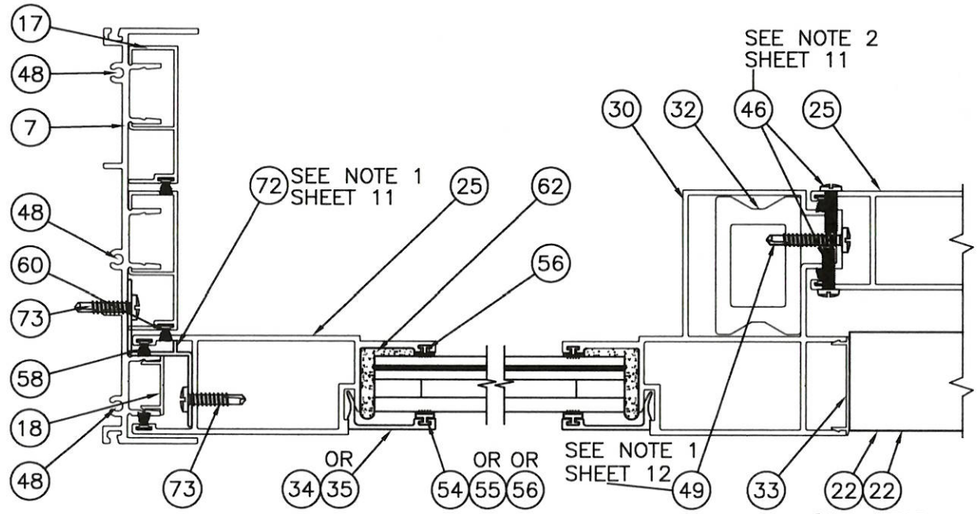

HORIZONTAL CROSS SECTION D
PLAIN STILE AT 3 TRACK JAMB

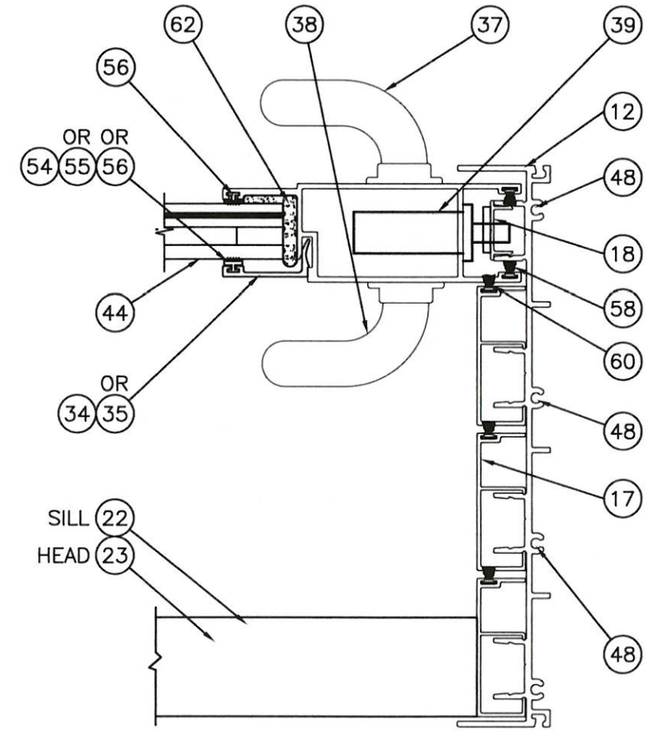

HORIZONTAL CROSS SECTION E
LOCK STILE AT 4 TRACK JAMB

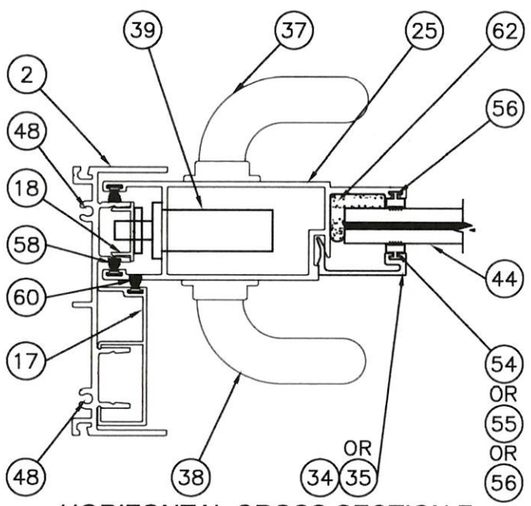

HORIZONTAL CROSS SECTION F
LOCK STILE AT 2 TRACK JAMB

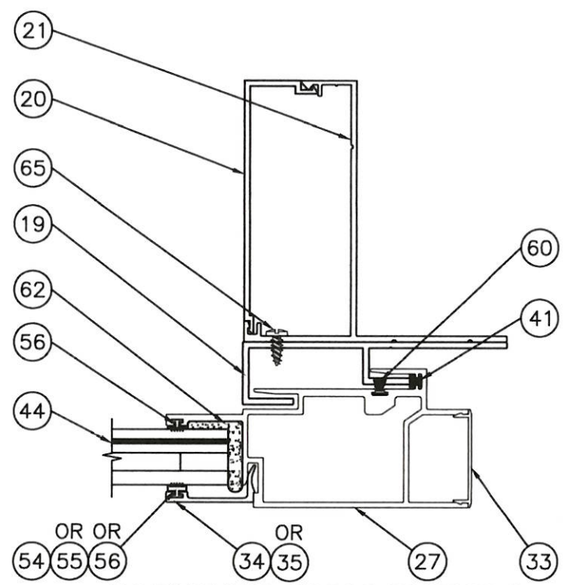

HORIZONTAL CROSS SECTION G
NON-REINFORCED INTERLOCK STILE AT HOOK STRIP

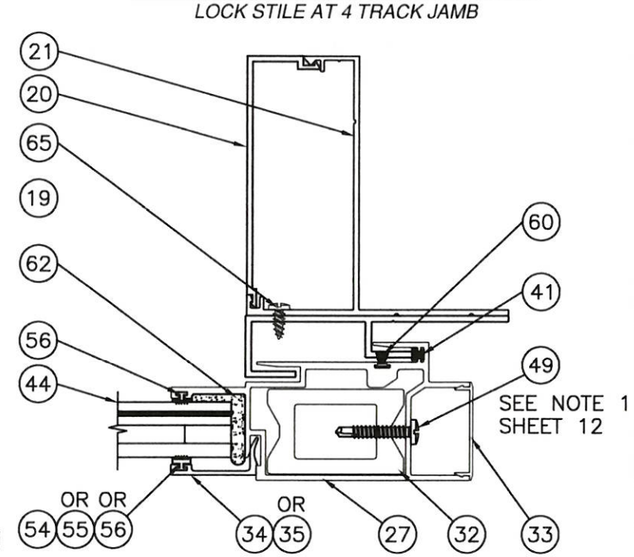

HORIZONTAL CROSS SECTION H
REINFORCED INTERLOCK STILE AT HOOK STRIP

NOTES:

1. FIXED PANEL TO JAMB CONDITION:
   FIXED PANEL IS SECURED TO JAMB USING (2) Z–CLIPS, ITEM #72, Z–CLIPS ARE LOCATED 24" FROM TOP OF PANEL DOWN AND 24" FROM BOTTOM OF PANEL UP. EACH Z–CLIP IS ATTACHED TO PANEL AND JAMB WITH (3) #10 x 3/4" PPH TEK SCREWS, ITEM #73. REFER TO SHEET 11 SECTION D AND FIXED PANEL STOPS, SILL COVER (ITEM #22) & HEAD COVER (ITEM #23) AND SHEET 14 AND SECTION Z.
2. FIXED PANEL TO FIXED PANEL CONDITION:
   FIXED PANELS ARE SECURED TOGETHER USING #8 x 3/4" PH TEK SCREW, ITEM #46, SCREWS ARE INSTALLED ON PANELS INTERIOR AND EXTERIOR AND ARE LOCATED 4" FROM TOP AND BOTTOM AND IN THE CENTER. REFER TO SHEET 11 SECTION D, AND FIXED PANEL STOPS, SILL COVER (ITEM #22) & HEAD COVER (ITEM #23) SHEET 12 SECTION O, SHEET 13 SECTION U, SHEET 14 SECTION CC AND DD.
3. SEE SHEETS 16–18 FOR TYPICAL ANCHORAGE TO VARIOUS SUBSTRATES.

EXTERIOR

PRODUCT REVISED
as complying with the Florida Building Code
NOA–No. 20-0806.05
Expiration Date 06/02/2025
By Ishaq I. Chanda
Miami–Dade Product Control

Revision: NO CHANGES THIS SHEET. EK 7/24/20

PREPARED BY A. LYNN MILLER
1070 TECHNOLOGY DRIVE
N. VENICE, FL 34275
(941) 480-1600
REGISTRATION #29296

WINDOOR® INCORPORATED
WINDOOR INCORPORATED
104 TRIPLE DIAMOND BLVD.
NORTH VENICE, FL 34275
(833) 554-5432

Series	Desc.	Title	Sheet	DWG No.	Drawn By	Date	Rev.
SGD7000A	SECTION VIEWS - HORIZONTAL	ALUMINUM SLIDING GLASS DOOR (LM)	11 OF 21	SGD7000LMI-NOA	ALAN KINNE	4/03/2020	A

ANTHONY LYNN MILLER LICENSE No. 58705 STATE OF FLORIDA PROFESSIONAL ENGINEER
7/28/20

A. LYNN MILLER, P.E.
P.E.# 58705

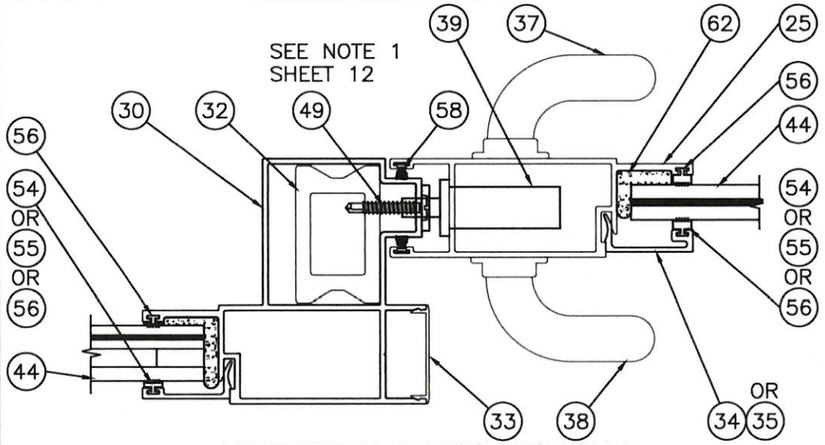

HORIZONTAL CROSS SECTION J

REINFORCED INTERIOR FIXED BUTT STILE TO LOCK STILE

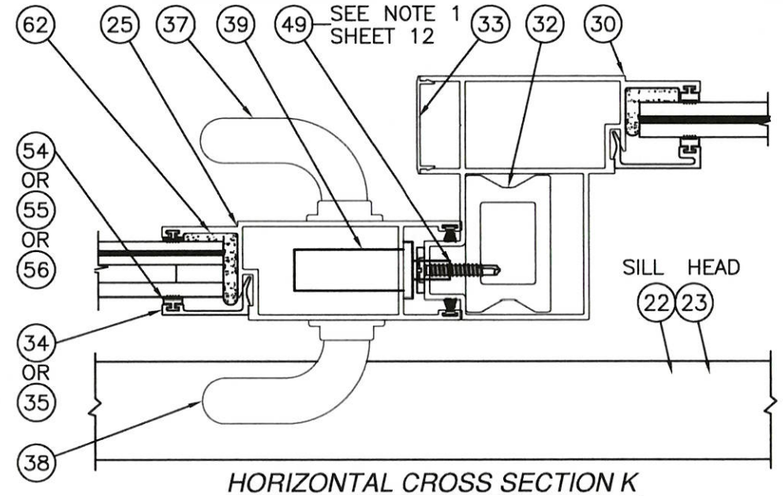

HORIZONTAL CROSS SECTION K

LOCK STILE TO REINFORCED EXTERIOR FIXED BUTT STILE

REINFORCED UNITS

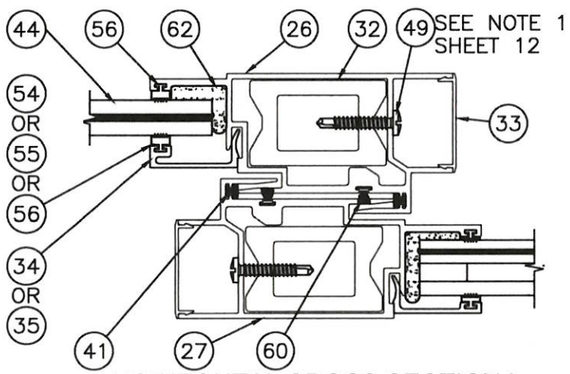

HORIZONTAL CROSS SECTION L

REINFORCED INTERLOCK STILE TO
REINFORCED INTERLOCK STILE

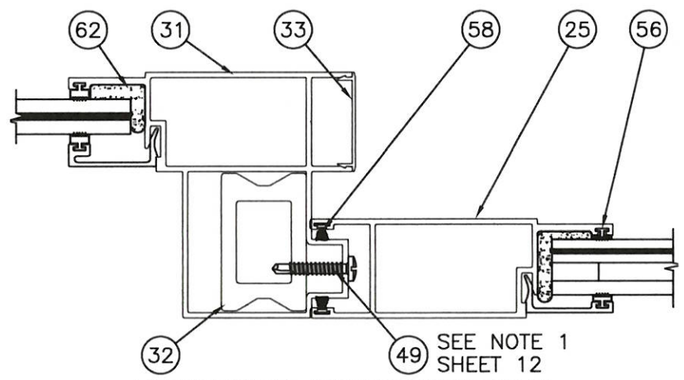

HORIZONTAL CROSS SECTION M

REINFORCED EXTERIOR FIXED BUTT STILE TO PLAIN STILE

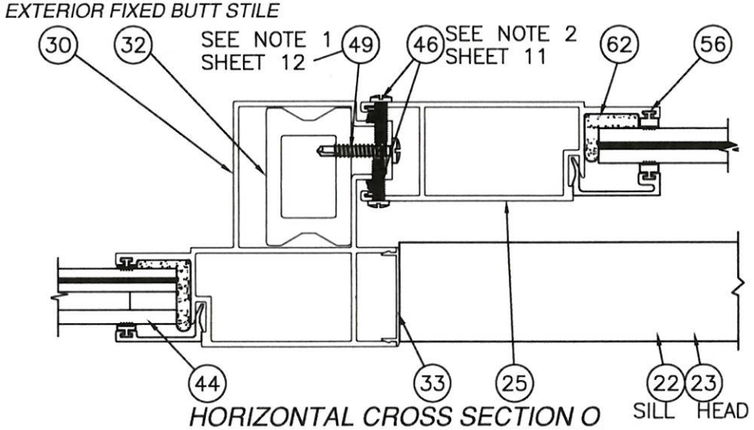

HORIZONTAL CROSS SECTION O

REINFORCED INTERIOR FIXED BUTT STILE TO PLAIN STILE

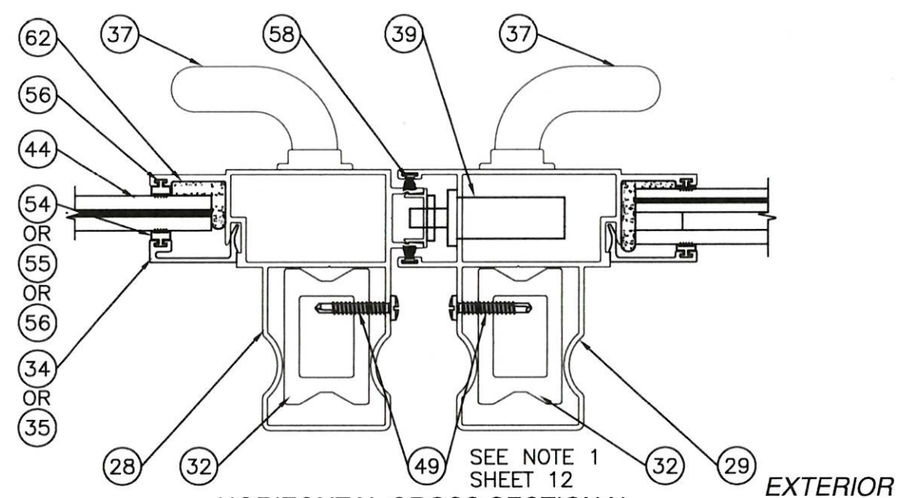

HORIZONTAL CROSS SECTION N

REINFORCED MALE BUTT STILE TO REINFORCED LOCKING BUTT STILE

NOTES:

1. REINFORCING BAR:
   ITEM #32, INTERLOCK REINFORCING BAR, IS SECURED TO THE INTERLOCK LEFT #26, INTERLOCK RIGHT #27, MALE BUTT STILE #28, LOCKING BUTT STILE #29 INTERIOR FIXED BUTT STILE #30 AND EXTERIOR FIXED BUTT STILE #31 WITH ITEM #49, #10 x 1" TEK SCREW SPACED 6" FROM TOP AND BOTTOM AND ONE IN THE CENTER.
2. SEE SHEETS 16–18 FOR TYPICAL ANCHORAGE TO VARIOUS SUBSTRATES.

PRODUCT REVISED
as complying with the Florida Building Code
NOA-No. 20-0806.05
Expiration Date 06/02/2025
By Ishwar I. Chanda
Miami-Dade Product Control

Revision: NO CHANGES THIS SHEET.
EK 7/24/20

PREPARED BY A. LYNN MILLER
1070 TECHNOLOGY DRIVE
N. VENICE, FL 34275
(941) 480-1600
REGISTRATION #29296

WINDOOR® INCORPORATED
WINDOOR INCORPORATED
104 TRIPLE DIAMOND BLVD.
NORTH VENICE, FL 34275
(833) 554-5432

Series	Desc.	Sheet	DWG No.	Drawn By	Date	Rev.
SGD7000A	SECTION VIEWS - HORIZONTAL	12 OF 21	SGD7000LMI-NOA	ALAN KINNE	4/03/2020	A

Title: ALUMINUM SLIDING GLASS DOOR (LM)

ANTHONY LYNN MILLER
LICENSE
No. 58705
STATE OF FLORIDA
PROFESSIONAL ENGINEER
7/28/20

A. LYNN MILLER, P.E.
P.E.# 58705

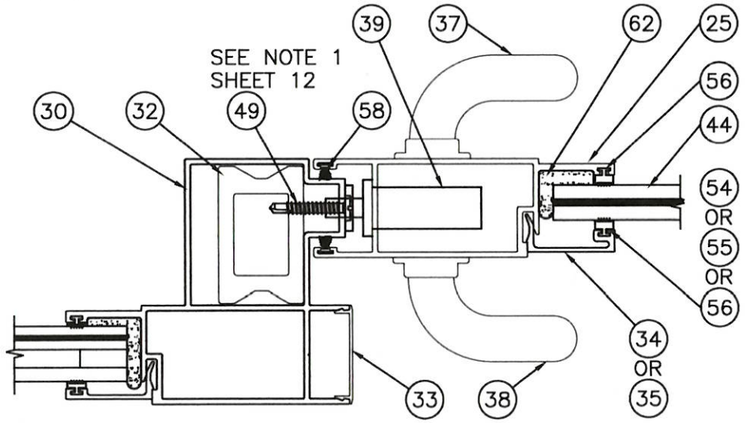

HORIZONTAL CROSS SECTION P

NON-REINFORCED INTERIOR FIXED BUTT STILE TO LOCK STILE

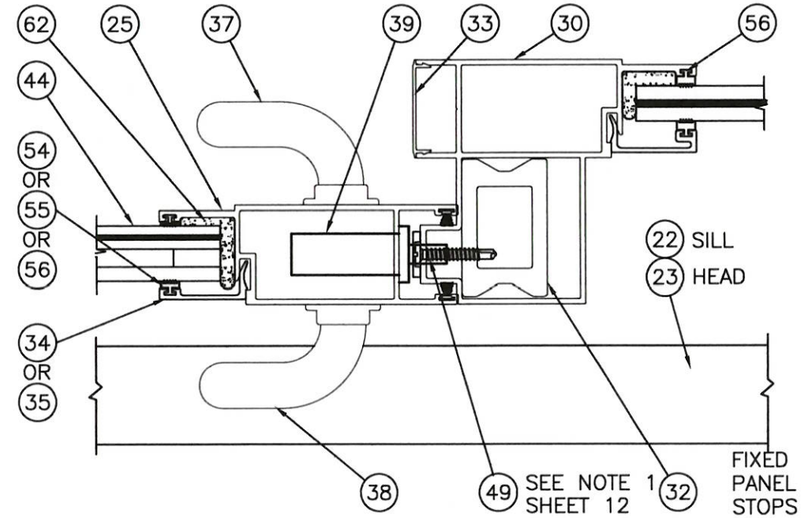

HORIZONTAL CROSS SECTION Q

LOCK STILE TO NON-REINFORCED EXTERIOR FIXED BUTT STILE

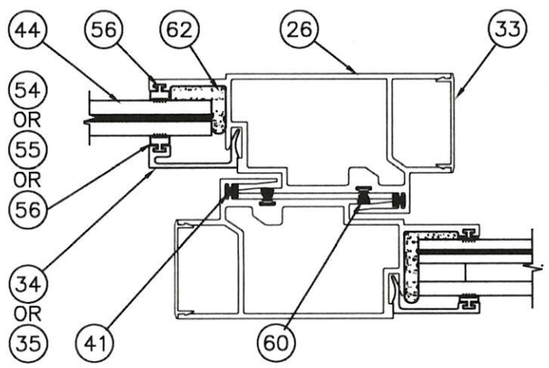

HORIZONTAL CROSS SECTION R

NON-REINFORCED INTERLOCK STILE TO
NON-REINFORCED INTERLOCK STILE

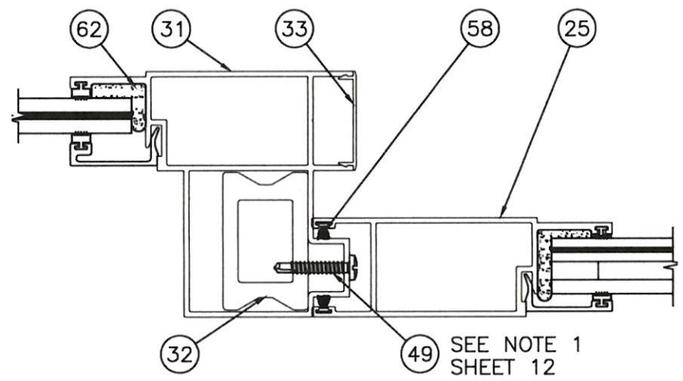

HORIZONTAL CROSS SECTION S

NON-REINFORCED EXTERIOR FIXED BUTT STILE TO PLAIN STILE

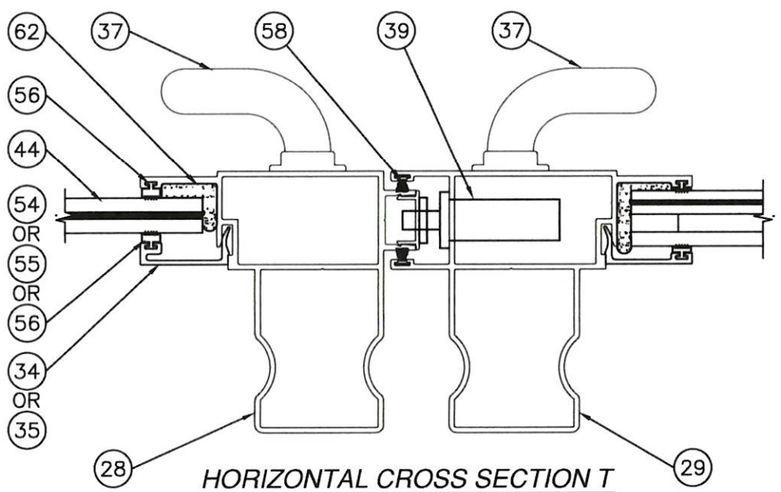

HORIZONTAL CROSS SECTION T

NON-REINFORCED MALE BUTT STILE TO NON-REINFORCED LOCKING
BUTT STILE

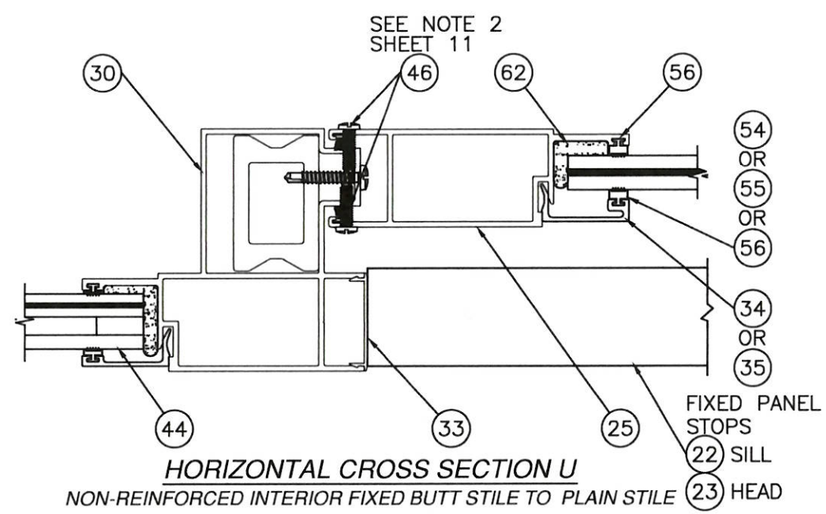

HORIZONTAL CROSS SECTION U

NON-REINFORCED INTERIOR FIXED BUTT STILE TO PLAIN STILE

EXTERIOR

PRODUCT REVISED
as complying with the Florida Building Code
NOA-No. 20-0806.05
Expiration Date 06/02/2025
By Ishwar I. Chanda
Miami-Dade Product Control

Revision:
NO CHANGES THIS SHEET.
EK 7/24/20

PREPARED BY A. LYNN MILLER
1070 TECHNOLOGY DRIVE
N. VENICE, FL 34275
(941) 480-1600
REGISTRATION #29296

WINDOOR® INCORPORATED
WINDOOR INCORPORATED
104 TRIPLE DIAMOND BLVD.
NORTH VENICE, FL 34275
(833) 554-5432

Series	Desc.	Sheet	DWG No.	Drawn By	Date	Rev.
SGD7000A	SECTION VIEWS - HORIZONTAL	13 OF 21	SGD7000LMI-NOA	ALAN KINNE	4/03/2020	A

Title: ALUMINUM SLIDING GLASS DOOR (LM)

ANTHONY LYNN MILLER
LICENSE
No. 58705
STATE OF FLORIDA
PROFESSIONAL ENGINEER
7/28/20

A. LYNN MILLER, P.E.
P.E.# 58705

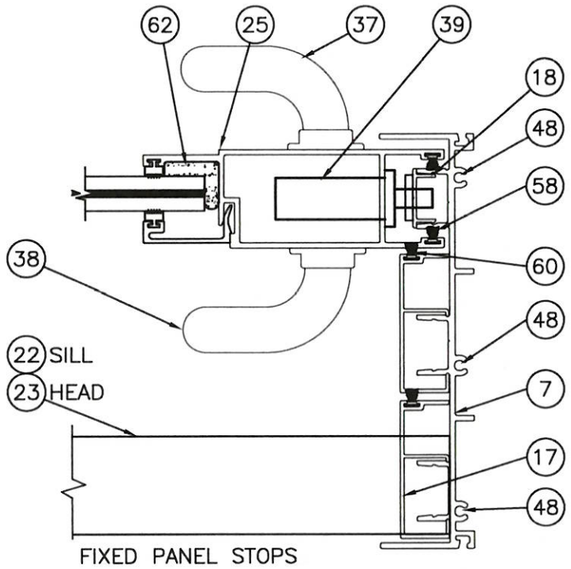

HORIZONTAL CROSS SECTION V

LOCK STILE AT 3 TRACK JAMB

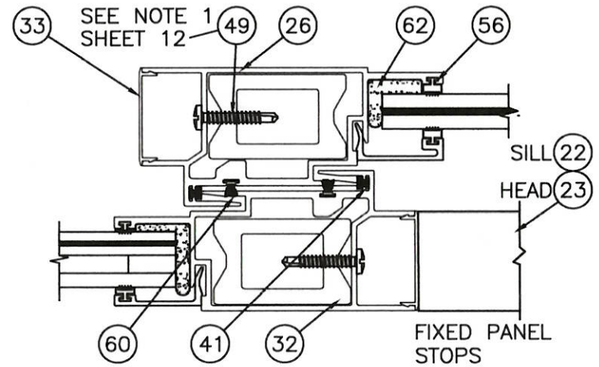

HORIZONTAL CROSS SECTION X

REINFORCED INTERLOCK STILE TO REINFORCED INTERLOCK STILE

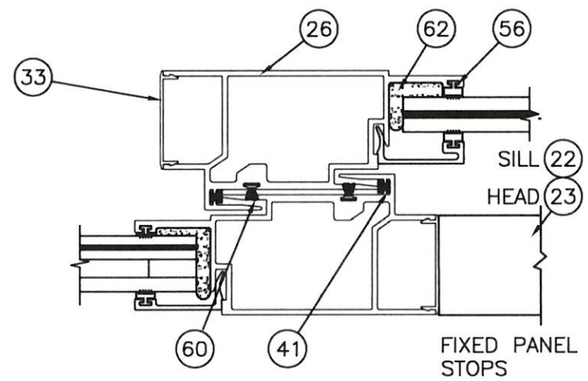

HORIZONTAL CROSS SECTION Y

NON-REINFORCED INTERLOCK STILE TO NON-REINFORCED INTERLOCK STILE

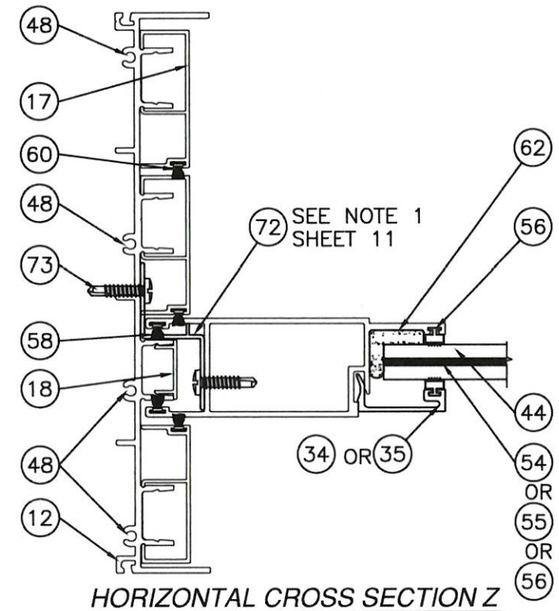

HORIZONTAL CROSS SECTION Z

PLAIN STILE AT 4 TRACK JAMB

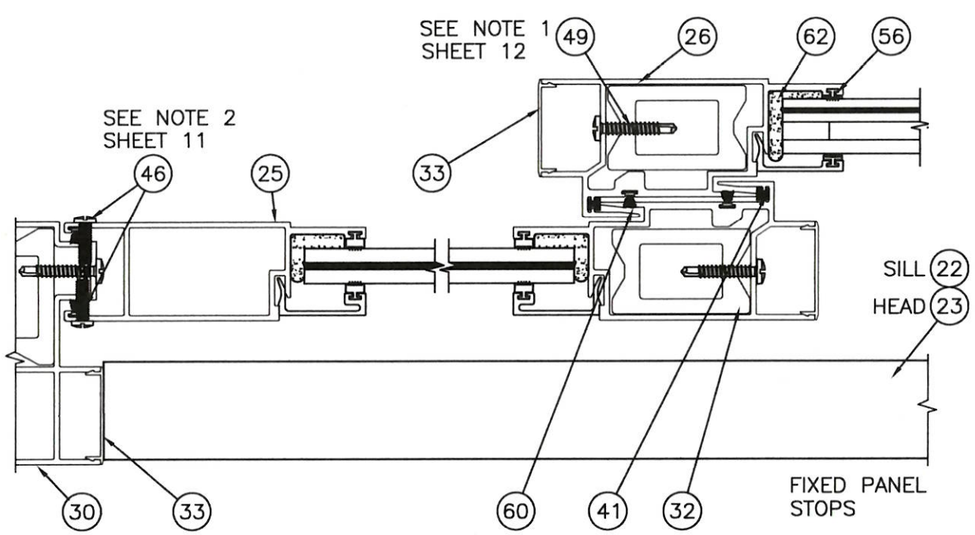

HORIZONTAL CROSS SECTION CC

REINFORCED INTERLOCK STILE TO REINFORCED INTERLOCK STILE

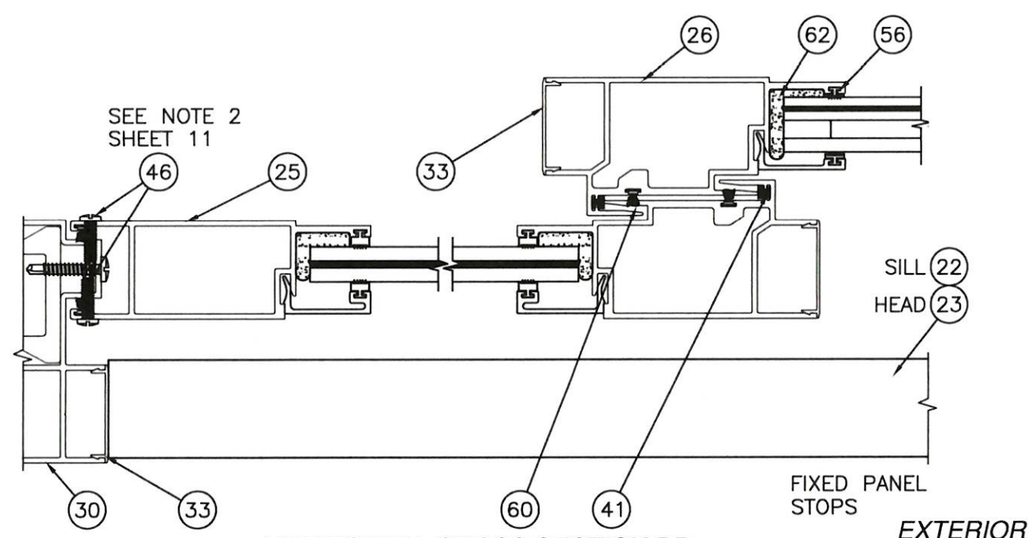

HORIZONTAL CROSS SECTION DD

NON-REINFORCED INTERLOCK STILE TO NON-REINFORCED INTERLOCK STILE

EXTERIOR

PRODUCT REVISED
as complying with the Florida Building Code
NOA-No. 20-0806.05
Expiration Date 06/02/2025
By Ishaq I. Chanda
Miami-Dade Product Control

Revision:
NO CHANGES THIS SHEET.
EK 7/24/20

WINDOOR® INCORPORATED
WINDOOR INCORPORATED
104 TRIPLE DIAMOND BLVD.
NORTH VENICE, FL 34275
(833) 554-5432

PREPARED BY A. LYNN MILLER
1070 TECHNOLOGY DRIVE
N. VENICE, FL 34275
(941) 480-1600
REGISTRATION #29296

Series	Desc.	Sheet	DWG No.	Drawn By	Date	Rev.
SGD7000A	SECTION VIEWS - HORIZONTAL	14 OF 21	SGD7000LMI-NOA	ALAN KINNE	4/03/2020	A

Title: ALUMINUM SLIDING GLASS DOOR (LM)

ANTHONY LYNN MILLER
LICENSE
No. 58705
STATE OF FLORIDA
PROFESSIONAL ENGINEER
7/28/20

A. LYNN MILLER, P.E.
P.E.# 58705

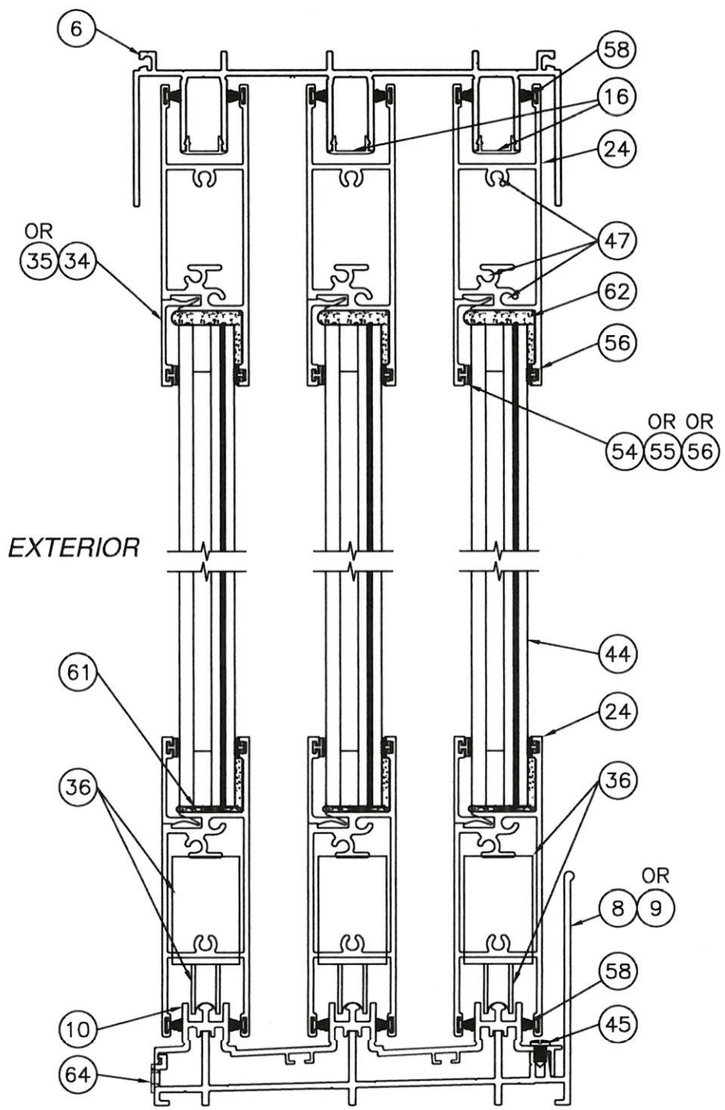

VERTICAL CROSS SECTION AA

3 TRACK FRAME SYSTEM

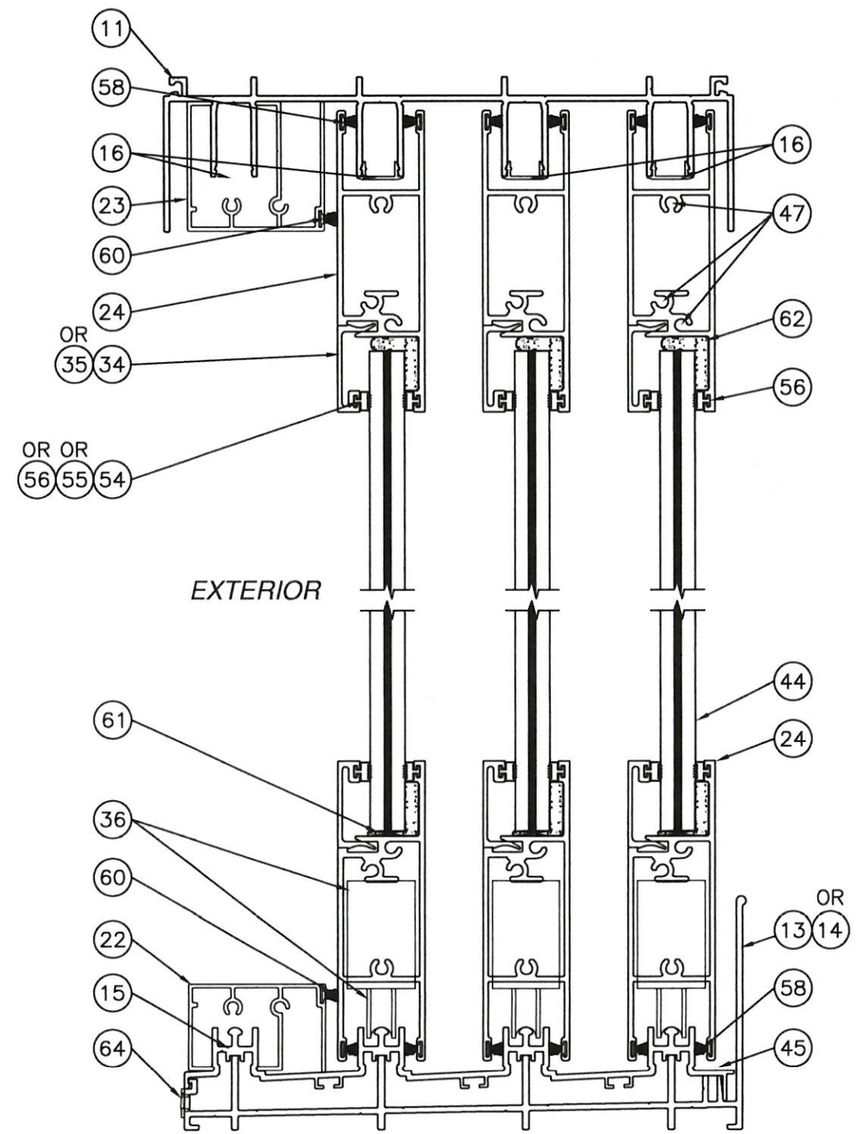

VERTICAL CROSS SECTION BB

4 TRACK FRAME SYSTEM

NOTES:

1. SEE SHEETS 16–18 FOR TYPICAL ANCHORAGE TO VARIOUS SUBSTRATES.

PRODUCT REVISED
as complying with the Florida Building Code
NOA-No. 20-0806.05
Expiration Date 06/02/2025
By Ishwar I. Chanda
Miami-Dade Product Control

Revision:
NO CHANGES THIS SHEET.
EK 7/24/20

PREPARED BY A. LYNN MILLER
1070 TECHNOLOGY DRIVE
N. VENICE, FL 34275
(941) 480-1600
REGISTRATION #29296

WINDOOR® INCORPORATED

WINDOOR INCORPORATED
104 TRIPLE DIAMOND BLVD.
NORTH VENICE, FL 34275
(833) 554-5432

Series	Sheet	DWG No.	Rev.
SGD7000A	15 OF 21	SGD7000LMI-NOA	A

Drawn By: ALAN KINNE

Date: 4/03/2020

Desc. Title: SECTION VIEWS - VERTICAL

ALUMINUM SLIDING GLASS DOOR (LM)

ANTHONY LYNN MILLER
LICENSE
No. 58705
STATE OF FLORIDA
PROFESSIONAL ENGINEER

7/28/20

A. LYNN MILLER, P.E.
P.E.# 58705

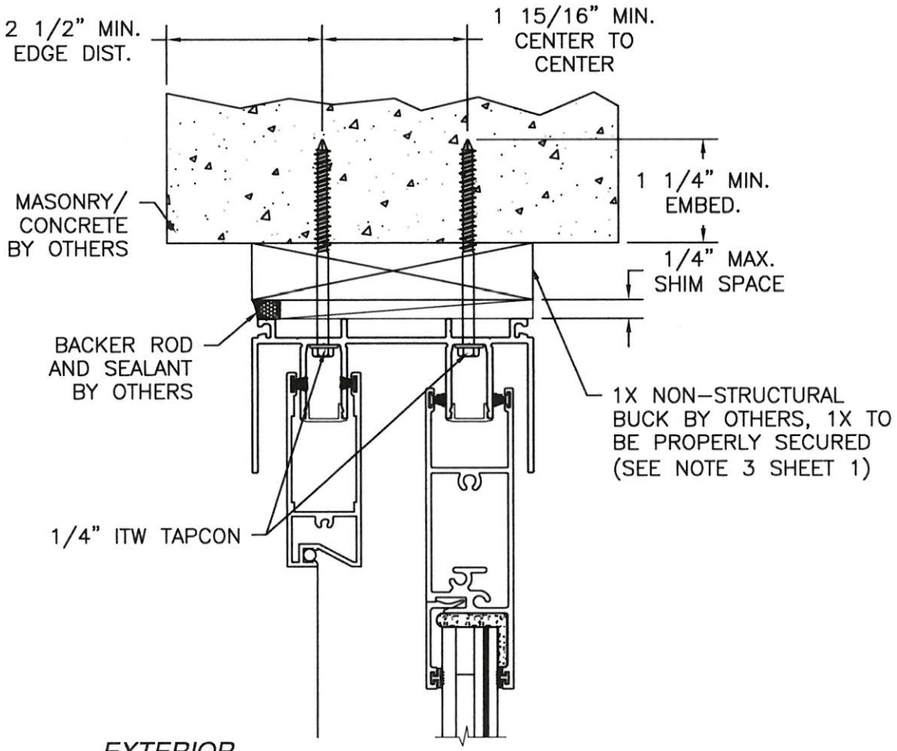

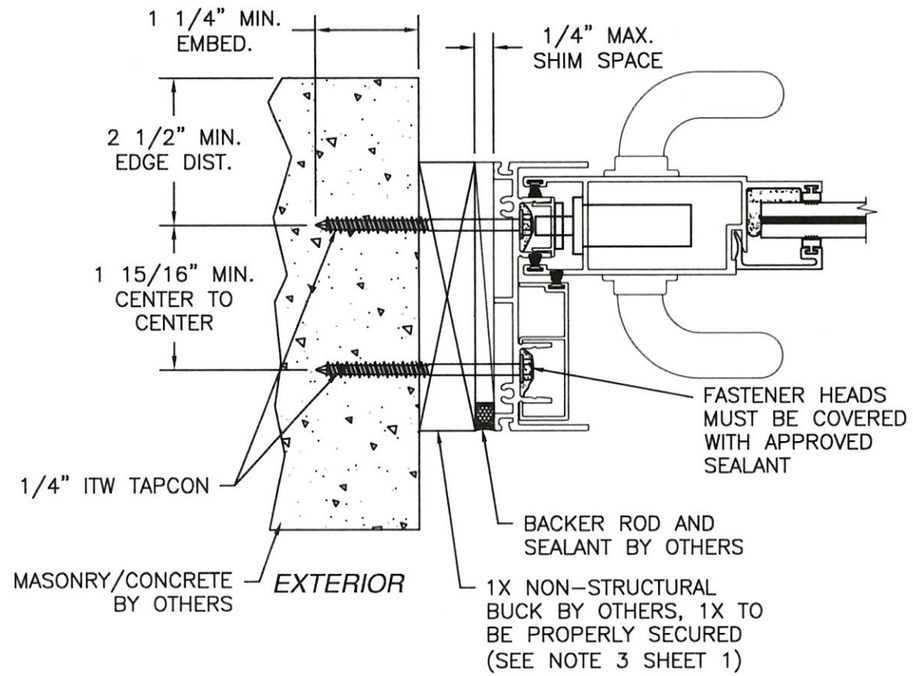

2 TRACK FRAME JAMB INSTALLATION

1X BUCK TO MASONRY/CONCRETE INSTALLATION

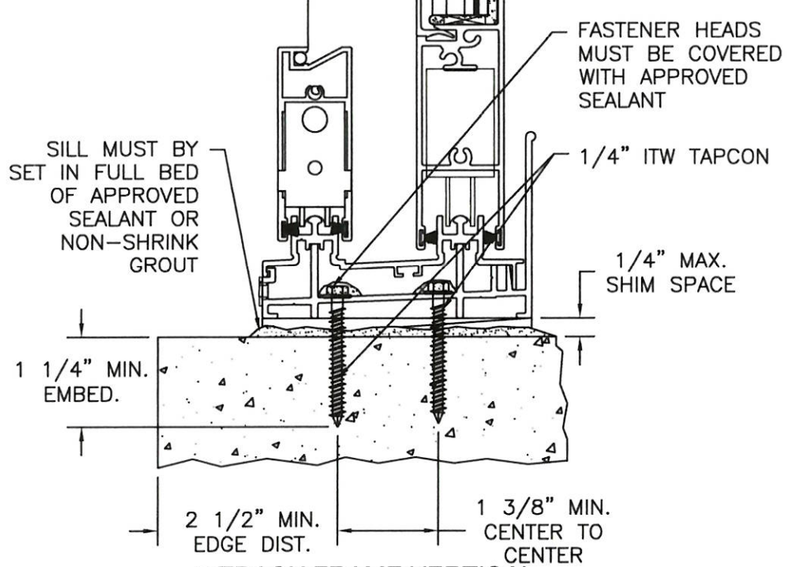

2 TRACK FRAME VERTICAL INSTALLATION

MASONRY/CONCRETE INSTALLATION

NOTES:

1. CONCRETE SUBSTRATE SHOWN.
2. 2 TRACK SHOWN, ANCHORAGE IN EXTERIOR & INTERIOR TRACK LOCATIONS IS TYPICAL FOR 3 TRACK AND 4 TRACK SYSTEMS, SEE SHEET 7.

PRODUCT REVISED
as complying with the Florida Building Code
NOA-No. 20-0806.05
Expiration Date 06/02/2025
By Ishwar I. Chanda
Miami-Dade Product Control

Revision: NO CHANGES THIS SHEET. EK 7/24/20

PREPARED BY A. LYNN MILLER
1070 TECHNOLOGY DRIVE
N. VENICE, FL 34275
(941) 480-1600
REGISTRATION #29296

WINDOOR® INCORPORATED
WINDOOR INCORPORATED
104 TRIPLE DIAMOND BLVD.
NORTH VENICE, FL 34275
(833) 554-5432

Series	Desc.	Sheet	DWG No.	Drawn By	Date	Rev.
SGD7000A	INSTALLATION DETAILS - MASONRY	16 OF 21	SGD7000LMI-NOA	ALAN KINNE	4/03/2020	A

Title: ALUMINUM SLIDING GLASS DOOR (LM)

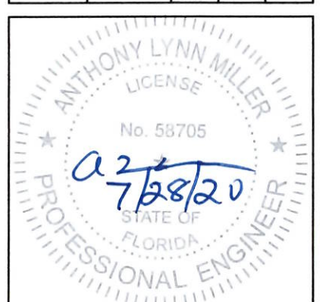

A. LYNN MILLER, P.E.
P.E.# 58705

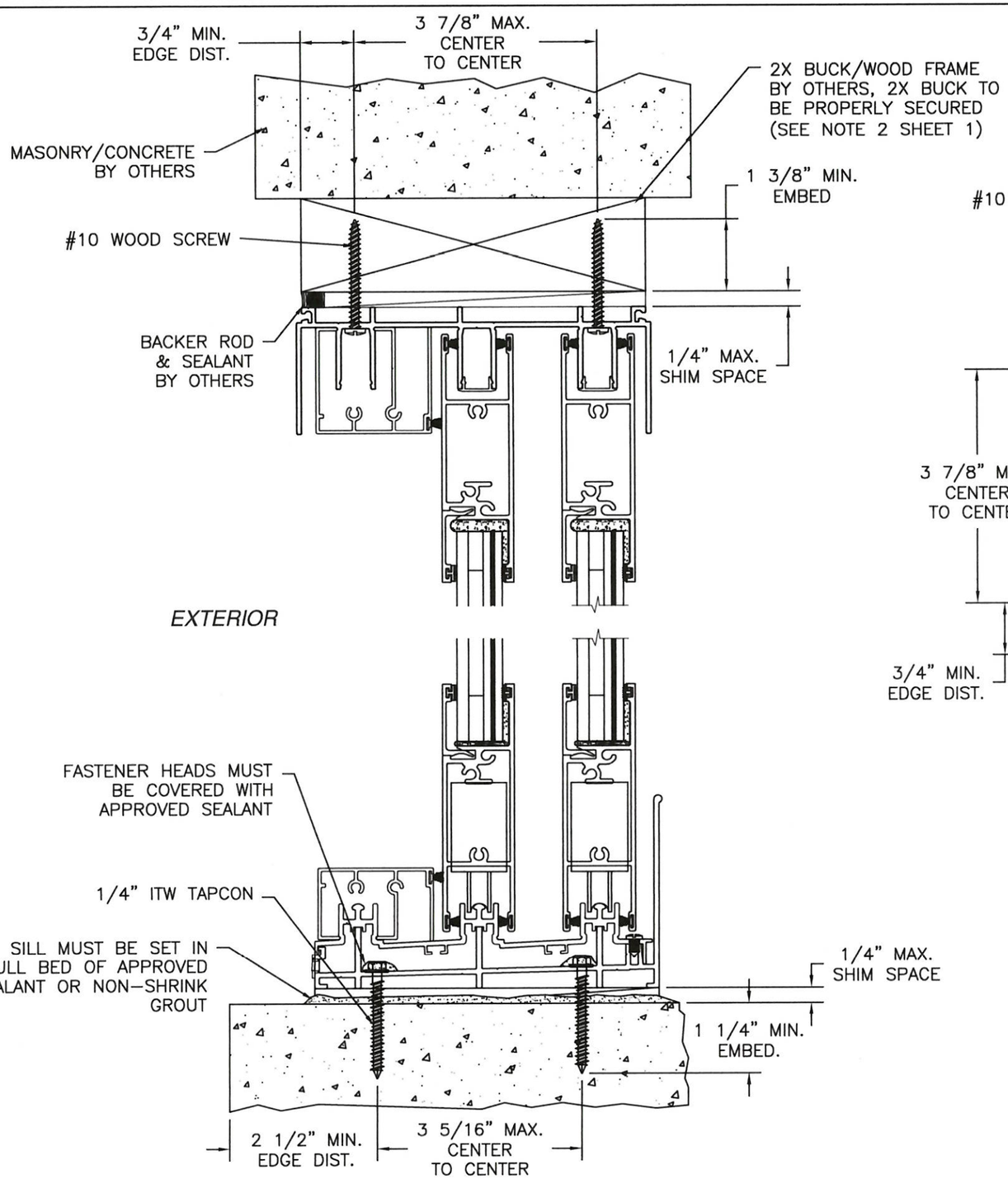

3 TRACK FRAME VERTICAL INSTALLATION

2X BUCK/WOOD FRAME INSTALLATION

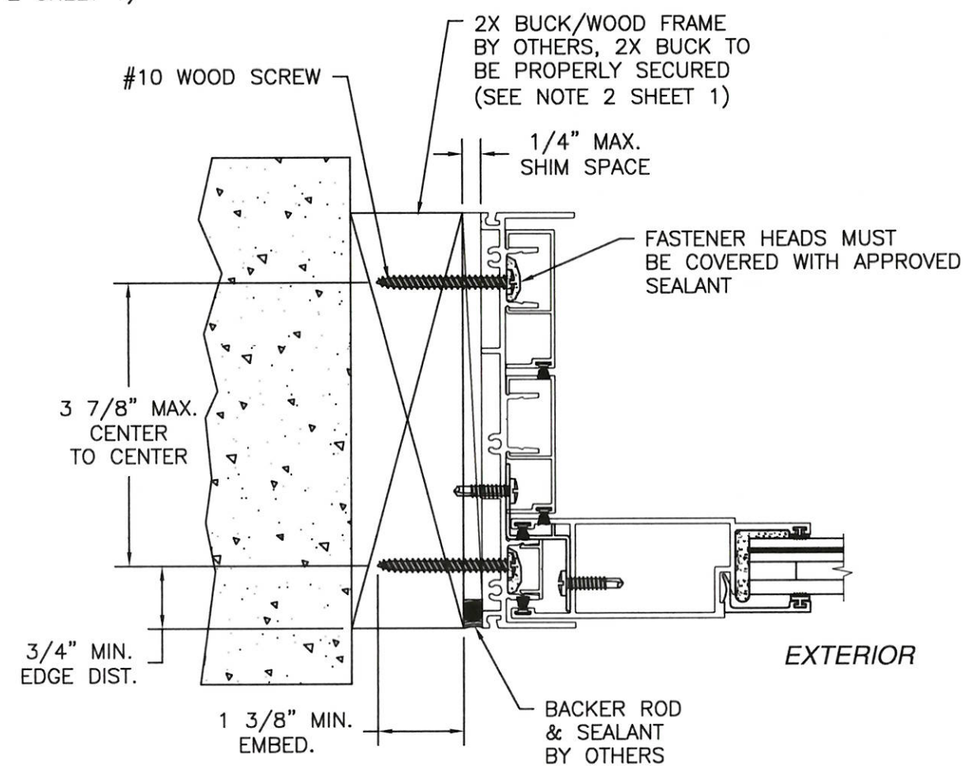

3 TRACK FRAME JAMB INSTALLATION

2X BUCK/WOOD FRAME INSTALLATION

NOTES:

1. 2X BUCK/WOOD FRAME SUBSTRATE SHOWN.
2. 3 TRACK SHOWN, ANCHORAGE IN EXTERIOR & INTERIOR TRACK LOCATIONS IS TYPICAL FOR 2 TRACK AND 4 TRACK SYSTEMS, SEE SHEET 7.

PRODUCT REVISED
as complying with the Florida Building Code
NOA-No. 20-0806.05
Expiration Date 06/02/2025
By Ishaq I. Chanda
Miami-Dade Product Control

Revision:
NO CHANGES THIS SHEET.
EK 7/24/20

WINDOOR® INCORPORATED
WINDOOR INCORPORATED
104 TRIPLE DIAMOND BLVD.
NORTH VENICE, FL 34275
(833) 554-5432

PREPARED BY A. LYNN MILLER
1070 TECHNOLOGY DRIVE
N. VENICE, FL 34275
(941) 480-1600
REGISTRATION #29296

Series	Sheet	DWG No.	Rev.
SGD7000A	17 OF 21	SGD7000LMI-NOA	A

Title	Drawn By	Date
ALUMINUM SLIDING GLASS DOOR (LM)	ALAN KINNE	4/03/2020

Desc: INSTALLATION DETAILS - WOOD

ANTHONY LYNN MILLER
LICENSE
No. 58705
STATE OF FLORIDA
PROFESSIONAL ENGINEER
7/28/20

A. LYNN MILLER, P.E.
P.E.# 58705

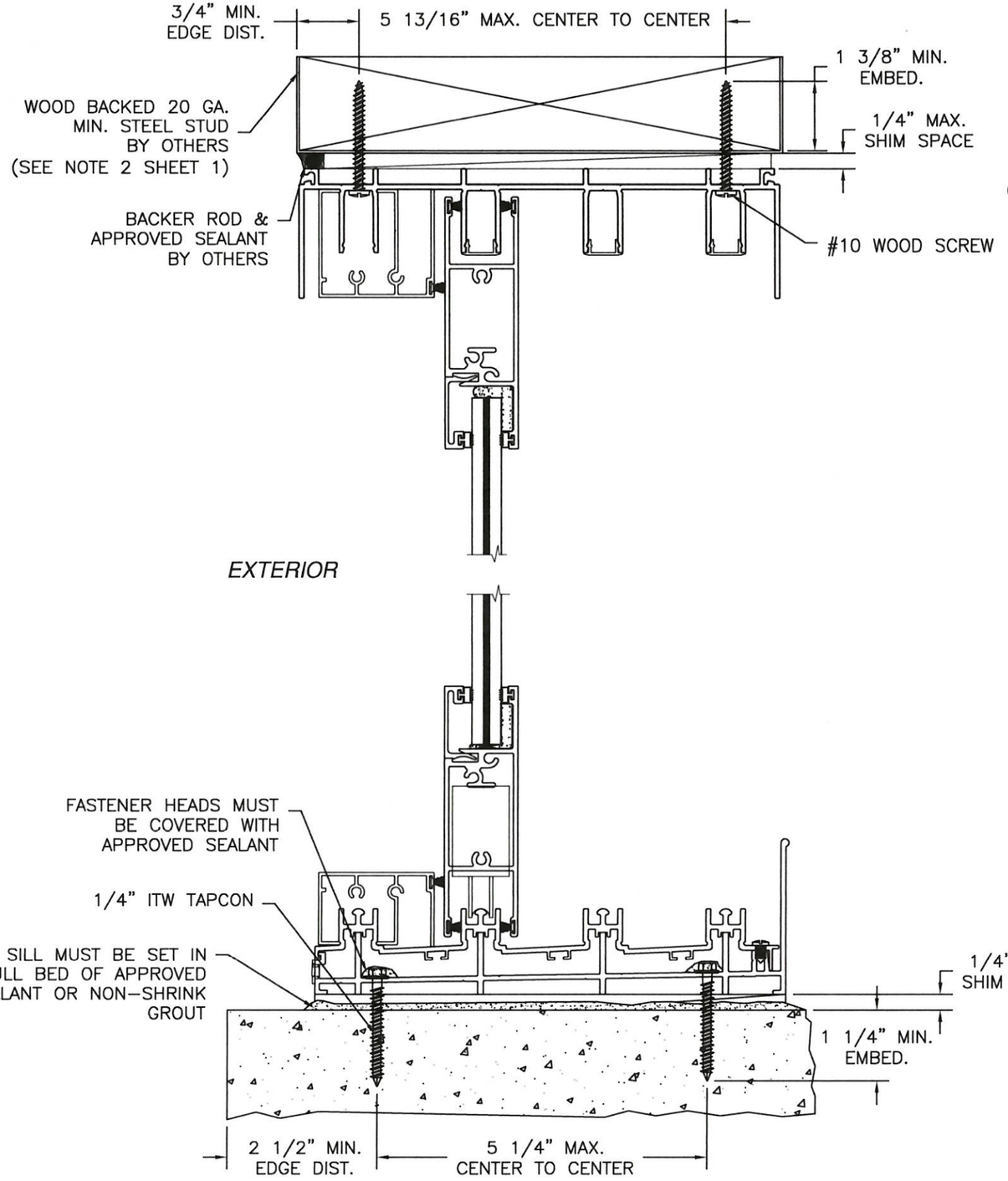

4 TRACK FRAME VERTICAL INSTALLATION

WOOD BACKED 20 GA. STEEL STUD INSTALLATION

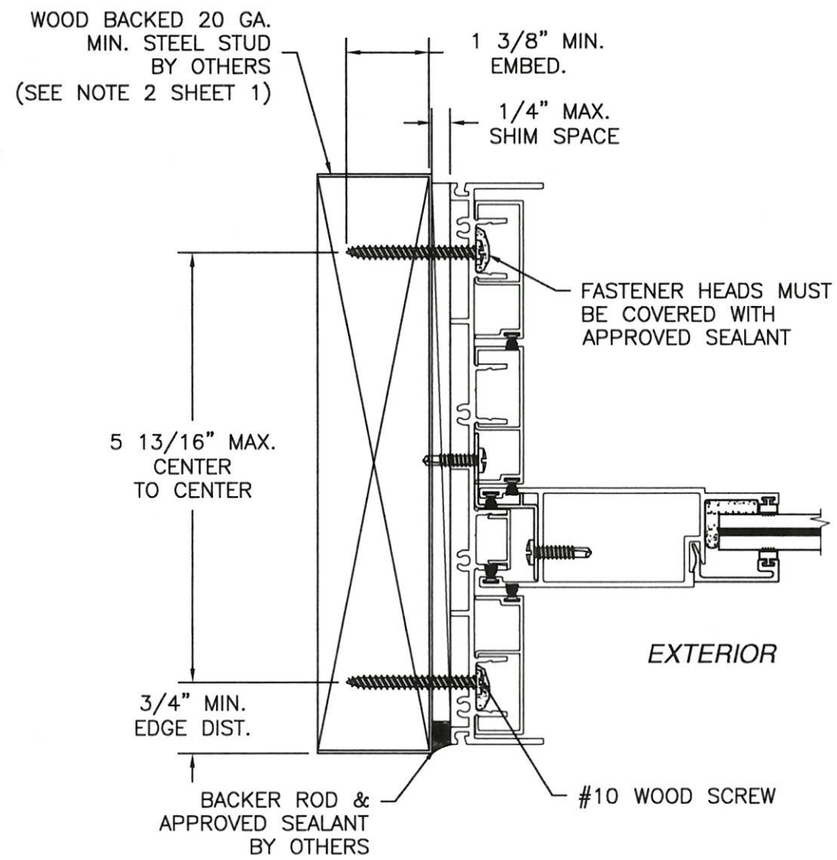

4 TRACK FRAME JAMB INSTALLATION

WOOD BACKED 20 GA. STEEL STUD INSTALLATION

NOTES:

1. WOOD BACKED 20 GA. STEEL STUD SUBSTRATE SHOWN.
2. 4 TRACK SHOWN, ANCHORAGE IN EXTERIOR & INTERIOR TRACK LOCATIONS IS TYPICAL FOR 2 TRACK AND 3 TRACK SYSTEMS, SEE SHEET 7.

PRODUCT REVISED
as complying with the Florida Building Code
NOA-No. 20-0806.05
Expiration Date 06/02/2025
By Ishaq I. Chanda
Miami-Dade Product Control

Revision: NO CHANGES THIS SHEET.
EK 7/24/20

PREPARED BY A. LYNN MILLER
1070 TECHNOLOGY DRIVE
N. VENICE, FL 34275
(941) 480-1600
REGISTRATION #29296

Series	Desc.	Sheet	DWG No.	Drawn By	Date	Rev.
SGD7000A	INSTALLATION DETAILS - STEEL	18 OF 21	SGD7000LMI-NOA	ALAN KINNE	4/03/2020	A

Title: ALUMINUM SLIDING GLASS DOOR (LM)

WINDOOR® INCORPORATED
WINDOOR INCORPORATED
104 TRIPLE DIAMOND BLVD.
NORTH VENICE, FL 34275
(833) 554-5432

ANTHONY LYNN MILLER
LICENSE
No. 58705
STATE OF FLORIDA
PROFESSIONAL ENGINEER
7/26/20

A. LYNN MILLER, P.E.
P.E.# 58705

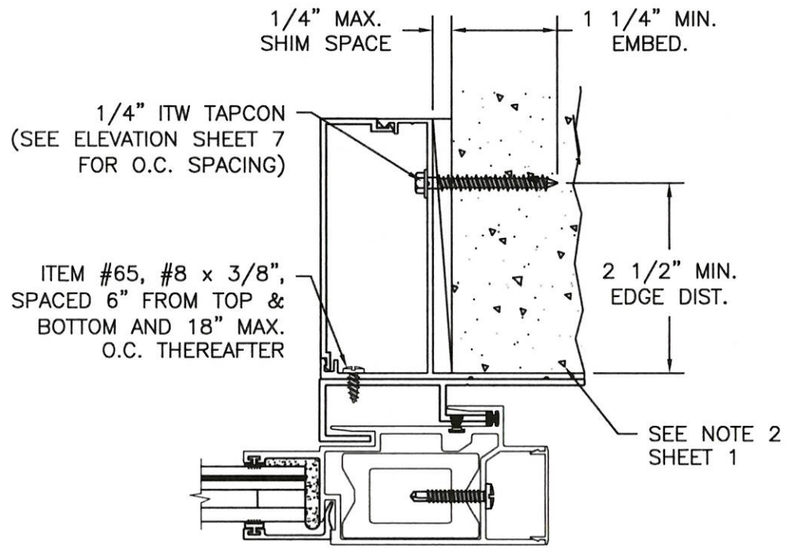

POCKET HOOK STRIP

MASONRY/CONCRETE INSTALLATION
REINFORCED SHOWN, NON-REINFORCED SIMILAR.

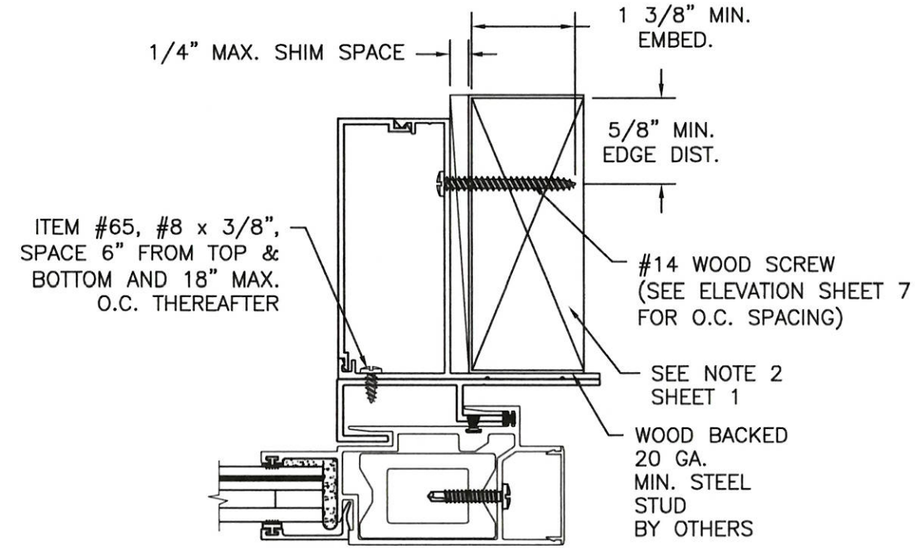

POCKET HOOK STRIP

WOOD BACKED 20 GA. STEEL STUD INSTALLATION
REINFORCED SHOWN, NON-REINFORCED SIMILAR.

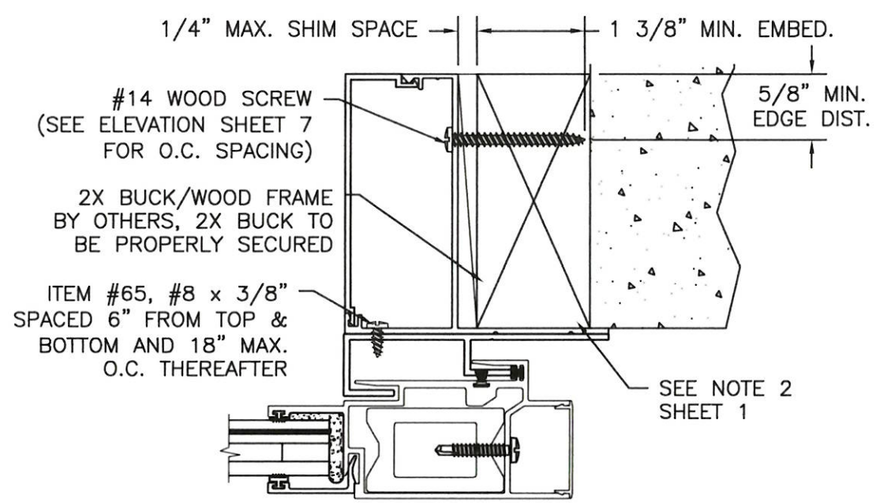

POCKET HOOK STRIP

2X BUCK/WOOD FRAME INSTALLATION
REINFORCED SHOWN, NON-REINFORCED SIMILAR.

NOTES:

1. SEE POCKET JAMB (HOOK STRIP) ELEVATION IN SHEET 7 AND ANCHOR CHART #10 IN SHEET 6.

EXTERIOR

PRODUCT REVISED
as complying with the Florida Building Code
NOA-No. 20-0806.05
Expiration Date 06/02/2025
By Ishaq I. Chanda
Miami-Dade Product Control

Revision: NO CHANGES THIS SHEET. EK 7/24/20

PREPARED BY A. LYNN MILLER
1070 TECHNOLOGY DRIVE
N. VENICE, FL 34275
(941) 480-1600
REGISTRATION #29296

WINDOOR® INCORPORATED

WINDOOR INCORPORATED
104 TRIPLE DIAMOND BLVD.
NORTH VENICE, FL 34275
(833) 554-5432

Series	Desc.	Title	Sheet	DWG No.	Drawn By	Date	Rev.
SGD7000A	INSTALLATION DETAILS-HOOK STRIP	ALUMINUM SLIDING GLASS DOOR (LM)	19 OF 21	SGD7000LMI-NOA	ALAN KINNE	4/03/2020	A

ANTHONY LYNN MILLER
LICENSE
No. 58705
STATE OF FLORIDA
PROFESSIONAL ENGINEER

7/28/20

A. LYNN MILLER, P.E.
P.E.# 58705

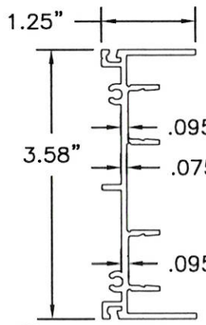

(2) 2 TRACK FRAME JAMB
6063-T6 ALUM.

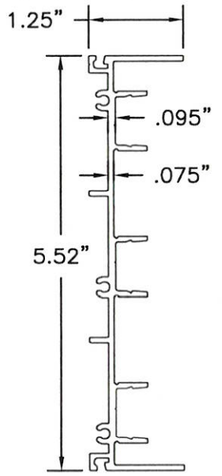

(7) 3 TRACK FRAME JAMB
6063-T6 ALUM.

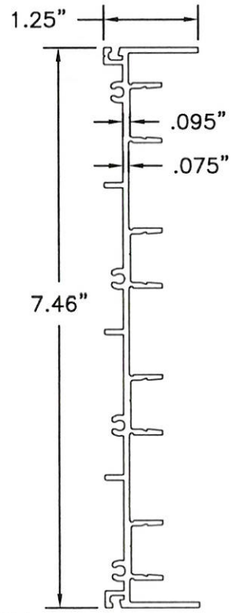

(12) 4 TRACK FRAME JAMB
6063-T6 ALUM.

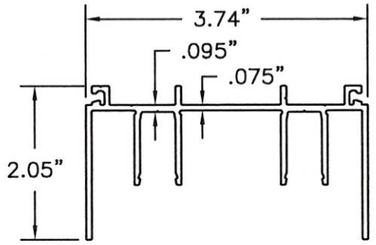

(1) 2 TRACK FRAME HEAD
6063-T6 ALUM.

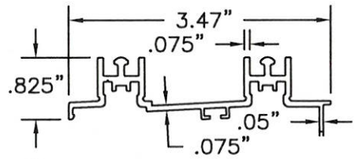

(5) 2T SILL INSERT
6063-T6 ALUM.

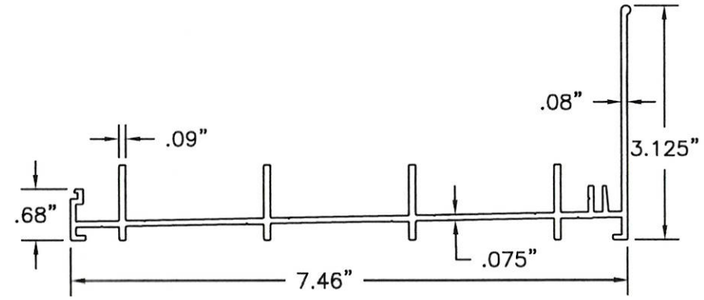

(14) 4 TRACK SILL PAN
3 1/8" RISER
6063-T6 ALUM.

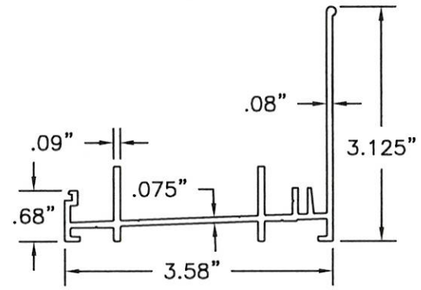

(4) 2 TRACK SILL PAN
3 1/8" RISER
6063-T6 ALUM.

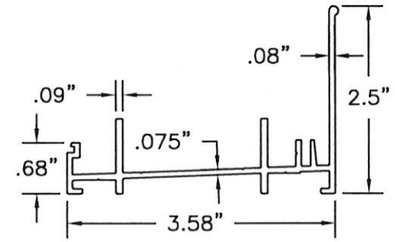

(3) 2 TRACK SILL PAN
2 1/2" RISER
6063-T6 ALUM.

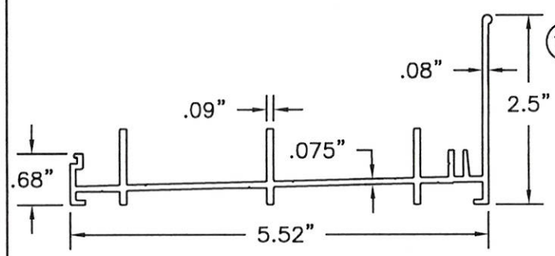

(8) 3 TRACK SILL PAN
2 1/2" RISER
6063-T6 ALUM.

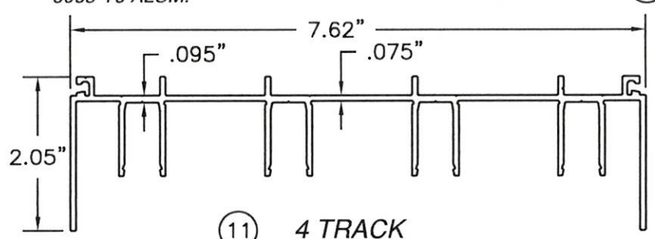

(11) 4 TRACK FRAME HEAD
6063-T6 ALUM.

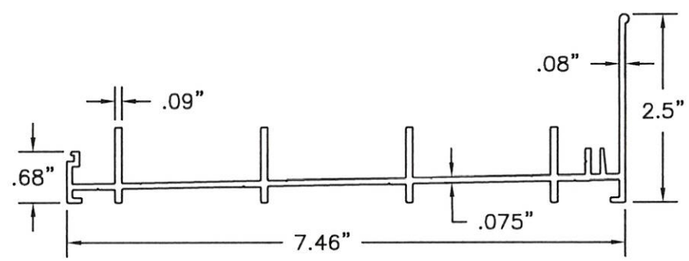

(13) 4 TRACK SILL PAN
2 1/2" RISER
6063-T6 ALUM.

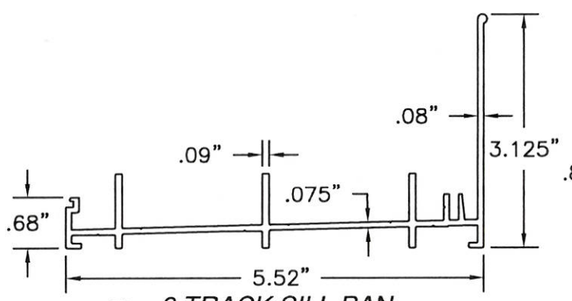

(9) 3 TRACK SILL PAN
3 1/8" RISER
6063-T6 ALUM.

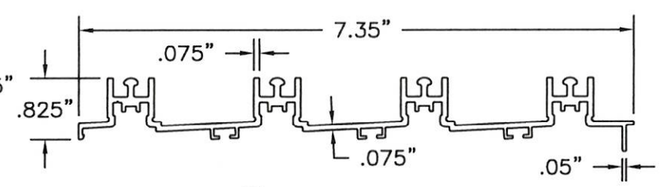

(15) 4 TRACK SILL INSERT
6063-T6 ALUM.

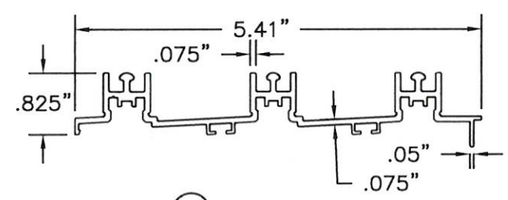

(10) 3 TRACK SILL INSERT
6063-T6 ALUM.

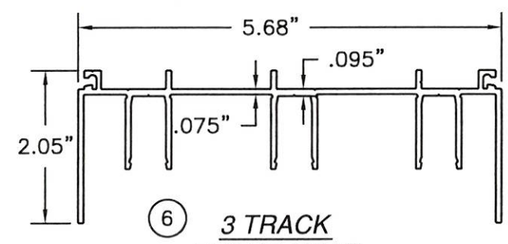

(6) 3 TRACK FRAME HEAD
6063-T6 ALUM.

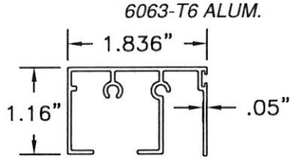

(22) PANEL STOP SILL COVER
6063-T6 ALUM.

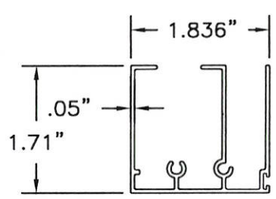

(23) PANEL STOP HEAD COVER
6063-T6 ALUM.

PRODUCT REVISED
as complying with the Florida Building Code
NOA-No. 20-0806.05
Expiration Date 06/02/2025
By Ishaq I. Chanda
Miami-Dade Product Control

Revision: NO CHANGES THIS SHEET.
EK 7/24/20

PREPARED BY A. LYNN MILLER
1070 TECHNOLOGY DRIVE
N. VENICE, FL 34275
(941) 480-1600
REGISTRATION #29296

WINDOOR® INCORPORATED
WINDOOR INCORPORATED
104 TRIPLE DIAMOND BLVD.
NORTH VENICE, FL 34275
(833) 554-5432

Title	Desc.	Drawn By	Date	Rev.
ALUMINUM SLIDING GLASS DOOR (LM)	EXTRUSIONS	ALAN KINNE	4/03/2020	A

Series	Sheet	DWG No.
SGD7000A	20 OF 21	SGD7000LMI-NOA

ANTHONY LYNN MILLER
LICENSE
No. 58705
STATE OF FLORIDA
PROFESSIONAL ENGINEER
7/28/20

A. LYNN MILLER, P.E.
P.E.# 58705

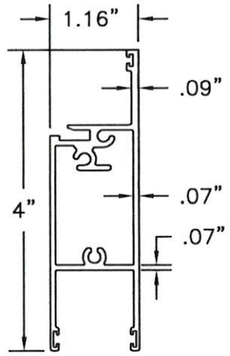

(24) TOP & BOTTOM RAIL
6063-T6 ALUM.

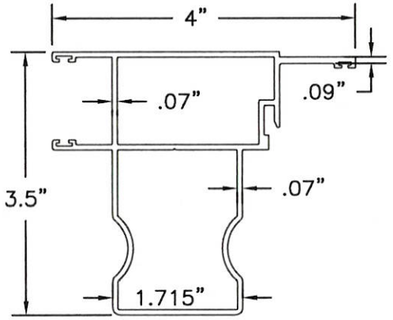

(29) LOCKING BUTT STILE
6063-T6 ALUM.

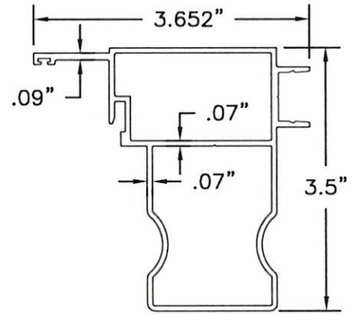

(28) MALE BUTT STILE
6063-T6 ALUM.

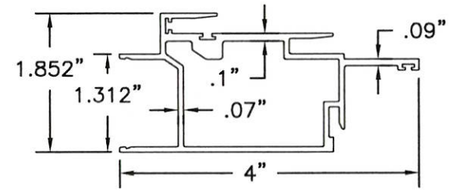

(27) INTERLOCK STILE RIGHT
6063-T6 ALUM.

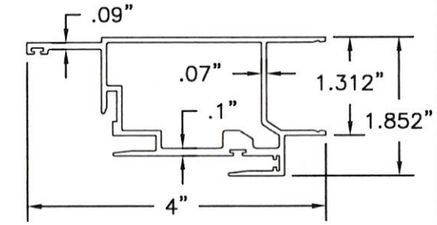

(26) INTERLOCK STILE LEFT
6063-T6 ALUM.

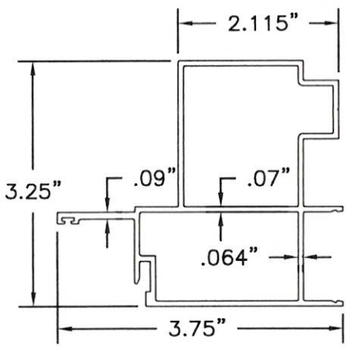

INTERIOR FIXED BUTT STILE
6063-T6 ALUM.
(30)

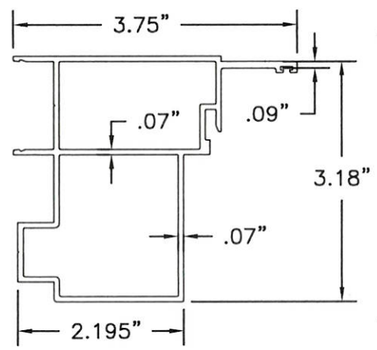

(31) EXTERIOR FIXED BUTT STILE
6063-T6 ALUM.

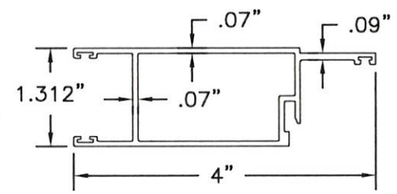

(25) LOCK/PLAIN STILE
6063-T6 ALUM.

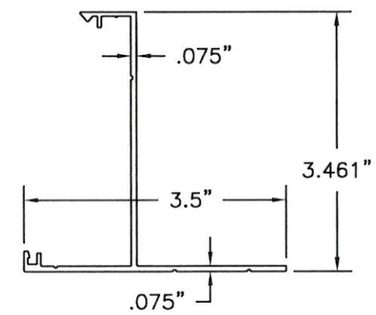

(21) HOOK STRIP WALL MOUNT
6063-T6 ALUM.

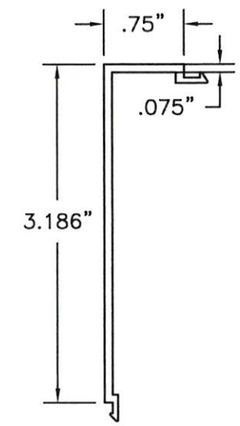

HOOK STRIP WALL COVER
(20) 6063-T6 ALUM.

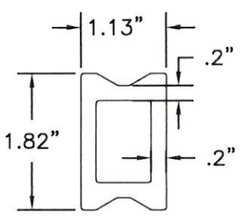

(32) INTERLOCK REINFORCING BAR
6005-T5 ALUM.

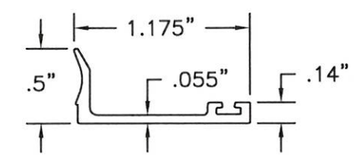

(35) 3/4" GLASS STOP
6063-T6 ALUM.

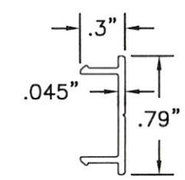

(18) FLUSH JAMB COVER
6063-T6 ALUM.

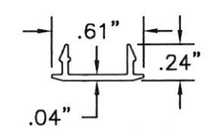

(16) FRAME HEAD TRACK COVER
6063-T6 ALUM.

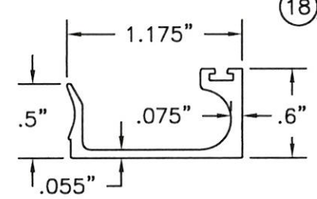

(34) 1/4" AND 3/16" GLASS STOP
6063-T6 ALUM.

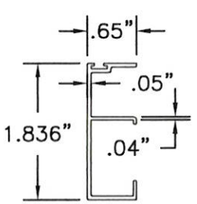

(17) RECESSED JAMB COVER
6063-T6 ALUM.

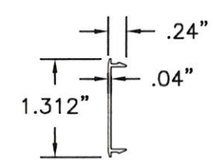

(33) BUTT STILE & INTERLOCK COVER
6063-T6 ALUM.

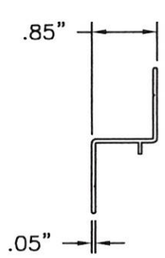

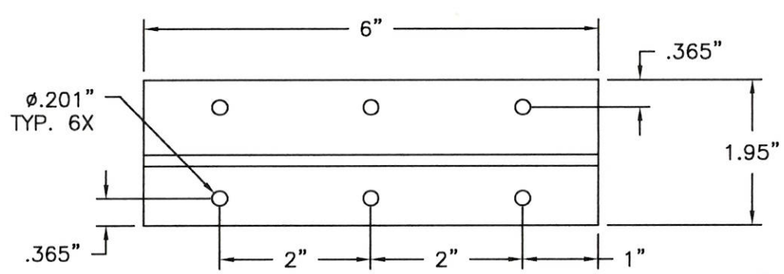

(72) FIXED PANEL Z-CLIP
6063-T6 ALUM.

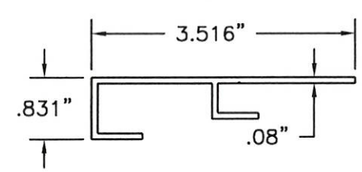

(19) HOOK STRIP BASE
6063-T6 ALUM.

PRODUCT REVISED
as complying with the Florida Building Code
NOA-No. 20-0806.05
Expiration Date 06/02/2025
By Ishaq I. Chanda
Miami-Dade Product Control

Revision:
NO CHANGES THIS SHEET.
EK 7/24/20

PREPARED BY A. LYNN MILLER
1070 TECHNOLOGY DRIVE
N. VENICE, FL 34275
(941) 480-1600
REGISTRATION #29296

WINDOOR® INCORPORATED
WINDOOR INCORPORATED
104 TRIPLE DIAMOND BLVD.
NORTH VENICE, FL 34275
(833) 554-5432

Series	Desc.	Sheet	DWG No.	Drawn By	Date	Rev.
SGD7000A	EXTRUSIONS	21 OF 21	SGD7000LMI-NOA	ALAN KINNE	4/03/2020	A

Title: ALUMINUM SLIDING GLASS DOOR (LM)

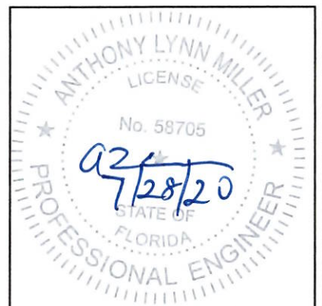

A. LYNN MILLER, P.E.
P.E.# 58705