ARMOUR LOC 0.032" ALUMINUM 1" NAILSTRIP
16" WIDE ROOF PANELS OVER 1/2" CDX PLYWOOD

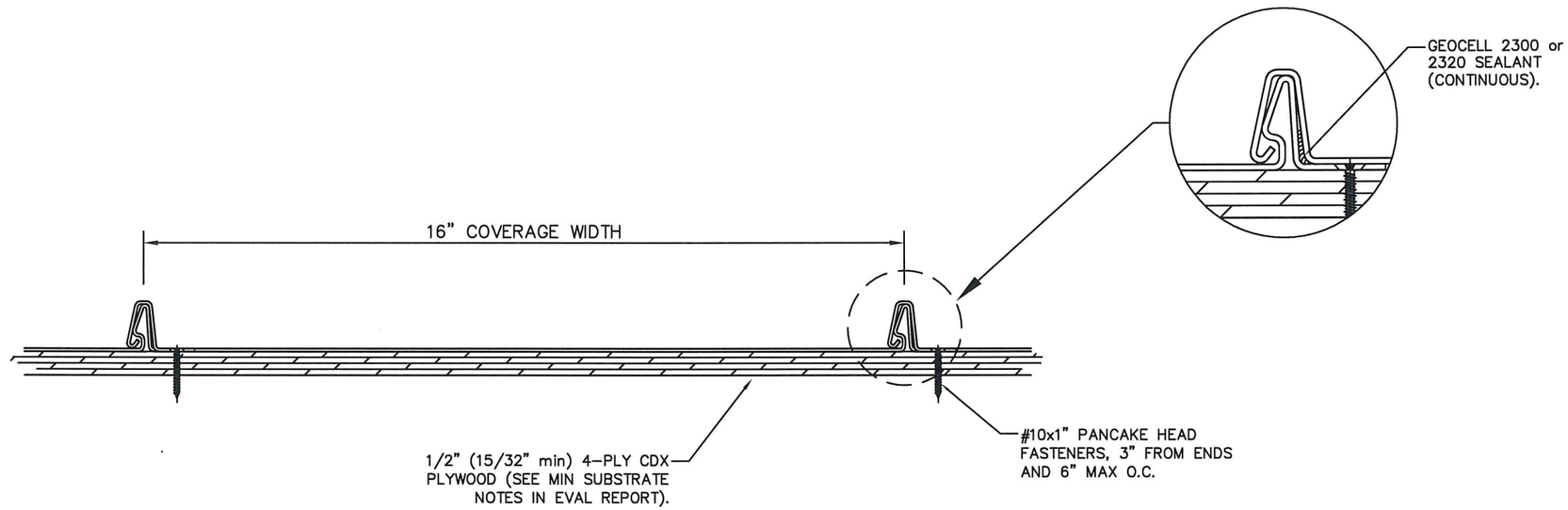

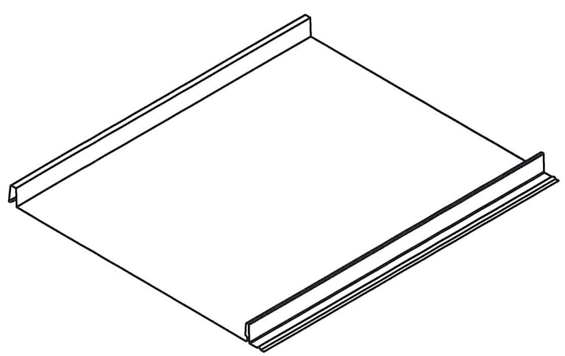

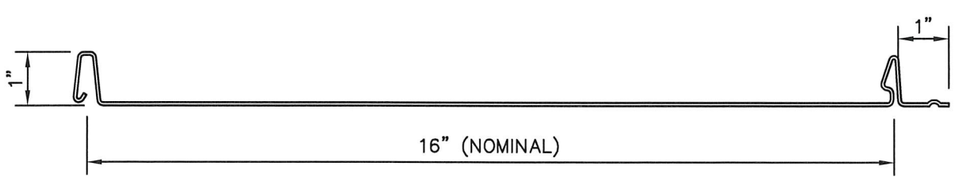

PANEL PROFILE

MAX DESIGN PRESSURE
-175 Psf

GENERAL NOTES:

1. ROOF SLOPE IS LIMITED PER THE REQUIREMENTS OF FBC SECTION 1507.4.2 or 1515.2.
2. DESIGN OF SUBSTRATE IS BY OTHERS AND NOT A PART OF THIS APPROVAL.
3. ALL PANEL SYSTEM PERIMETERS, PENETRATIONS, AND TRANSITIONS TO BE FLASHED AND SEALED PER THE REQUIREMENTS OF RAS 133.

REV.#	DATE	PRINTS ISSUED FOR
-	8/1/22	1ST SUBMITTAL
-	-	-
-	-	-
-	-	-
-	-	-
-	-	-
-	-	-

SEAL

SCOTT WOLTERS
STATE OF FLORIDA
No 62354
PROFESSIONAL ENGINEER
AUG 01 2022

SCOTT WOLTERS
FL PE# 62354

WOLTERS ENGINEERING
(COA# 27194)
15211 97TH ROAD N
WEST PALM BEACH, FL 33412
(561) 225-1982

1ST COAST METAL ROOFING SUPPLY

186 STATE ROAD 207
EAST PALATKA, FL 32131

PH: (561) 629-7288
www.1stcoastmrs.com

1ST COAST METAL ROOFING SUPPLY

DWG: 1CANS16-HZ

SHEET: 1/1