EVALUATION REPORT OF
METAL SALES MANUFACTURING, LLC
'BOARD AND BATTEN SERIES PANELS'

FLORIDA BUILDING CODE 9TH EDITION (2026)
FLORIDA PRODUCT APPROVAL
FL 34027.2-R2
PANEL WALLS
SIDING

Prepared For:
Metal Sales Manufacturing, LLC
7800 Highway 60
Sellersburg, IN 47172
Telephone: (502) 855-4300
Fax: (502) 855-4200

Prepared By:
Bala Sockalingam, Ph.D., P.E.
Florida Professional Engineer #62240
1216 N Lansing Ave., Suite C
Tulsa, OK 74106
Telephone: (918) 492-5992

This report consists of
Evaluation Report (3 Pages including cover)
Installation Details (2 Pages)
Load Span Tables (3 Pages)

Report No. C3060-2
Date: 10.1.2026

BALA SOCKALINGAM
LICENSE
No. 62240
STATE OF
FLORIDA
PROFESSIONAL ENGINEER

This item has been digitally signed and sealed by Bala Sockalingam, PE, on the date indicated.

Printed copies of this document are not considered signed and sealed and this signature must be verified on any electronic copies.

2026.10.01
07:55:21
-05'00'

Manufacturer:	Metal Sales Manufacturing, LLC
Product Name:	Board and Batten Series Panels
Panel Description:	BBD75-1010: Direct fastened panel consists of a 3/4" high, 2" wide symmetrical rib with 8" low flat profile. Coverage width is 10". BBD75-1212: Direct fastened panel consists of a 3/4" high, 2" wide symmetrical rib with 10" low flat profile. Coverage width is 12". BB75-1111: Clip fastened panel consists of a 3/4" high, 2" wide symmetrical rib with 9" low flat profile. Coverage width is 11".
Materials:	Min. 24 ga. 50 ksi steel. Galvanized coated steel (ASTM A653) or Galvalume coated steel (ASTM A792) or painted steel (ASTM A755) as per FBC 2026 Section 1405.2.
Supports or Sheathings:	Min. 16 ga., min 50 ksi steel section with min 2.5" flange width or min. nominal 1" x 4" dimensional lumber, designed by others. In lieu of open supports, min. 7/16" thick OSB sheathing or min. 15/32" thick plywood sheathing fastened to steel or wood supports at maximum 24" o.c. Sheathing and support connections must be designed to resist all loads and installed as per FBC 2026. Vapor barrier must be installed over sheathing in accordance with manufacturer's installation procedure.
Allowable Loads:	Allowable inward and outward loads are shown in the load span tables for min. 24 ga. panels fastened with concealed fastener or clip. Maximum panel span is 6'. The allowable inward loads were determined in accordance with FBC 2026 Section 1404.5 and 2210.1 and AISI S100-16(2020) w/S2-20. The allowable outward loads were determined with a factor of safety of 2 from ASTM E1592 testing and are applicable for the panel and panel to clip connection. Fasteners in min 16 ga. steel supports were designed with a factor of safety of 3. Fasteners in wood supports or substrates were designed with a factor of safety of 5 and duration factor of 1.6.
Panel Attachment:	Panels fastened with concealed fastener or clip as follows: BBD75-1010 & BBD75-1212: Fastened to min 16 ga. supports with (1) #12-14 x 1.25" long self-drilling screw or to OSB sheathing, plywood sheathing or dimensional lumber supports with (1) #12-11 x 1.5" long low-profile wood screw. Fasteners are corrosion resistant.

BB75-1111:
16 ga. low concealed fastened clips (4" long, 1.75" wide and 0.75" high). Fastened to min 16 ga. supports with (2) #12-14 x 1.25" long self-drilling screw per clip or to OSB sheathing, plywood sheathing or dimensional lumber supports with (2) #12-11 x 1.5" long low profile wood screws per clip. Clips and fasteners are corrosion resistant.

For installation in areas within 3000 ft. of a saltwater coastline, clips and fasteners are corrosion resistant as per FBC 2026 Section 1711.

Test Standards: Wall assembly tested in accordance with ASTM E1592-05(2017) 'Test Method for Structural Performance of Sheet Metal Roof and Siding Systems by Uniform Static Air Pressure Difference'.

Code Compliance: The product described herein has demonstrated compliance with FBC 2026 Section 1404.5.

Product Limitations: Design wind loads shall be determined for each project in accordance with FBC 2026 Section 1609 or ASCE 7-22 using allowable stress design. The maximum fastener or clip spacing listed herein shall not be exceeded. The design pressure for reduced fastener or clip spacing may be computed using rational analysis prepared by a Florida Professional Engineer or based on Metal Sales load span tables. This evaluation report is not applicable in High Velocity Hurricane Zone.

Supporting Documents: ASTM 1592 Test Report
ENCON Technology Inc.
C2809-3, Reporting Date 8/28/2024
C2408-1, Reporting Date 1/8/2021

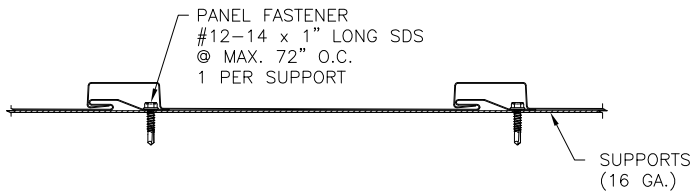

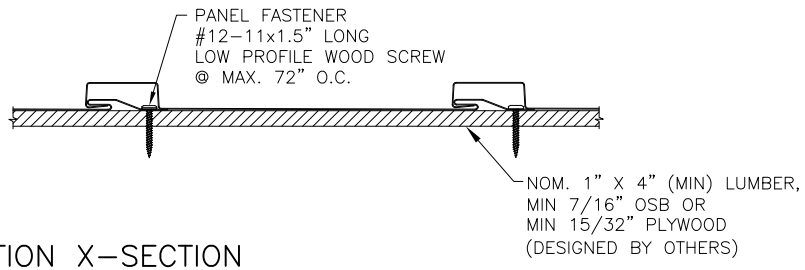

TYPICAL PANEL INSTALLATION X–SECTION

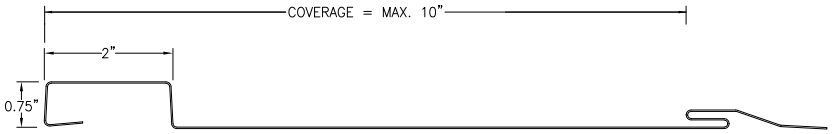

BBD75–1010 PANEL

24 GA.

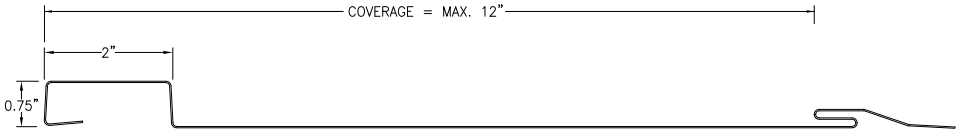

BBD75–1212 PANEL

24 GA.

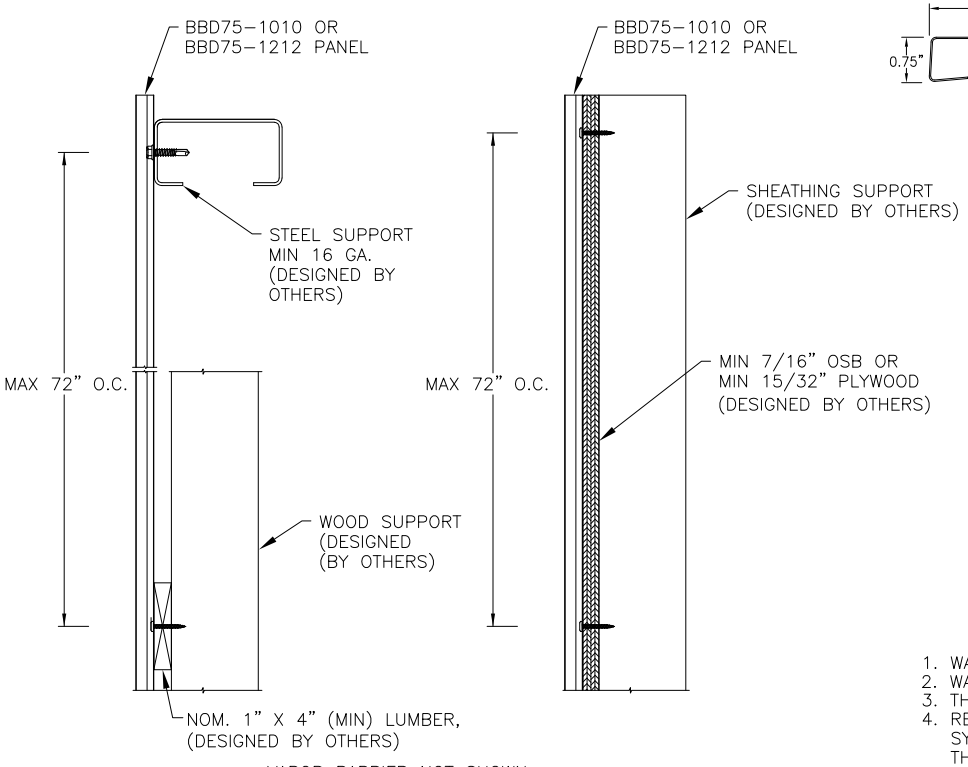

VAPOR BARRIER NOT SHOWN

SECTION VIEW

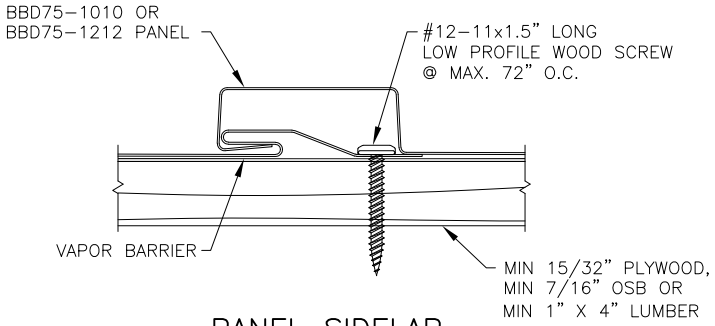

PANEL SIDELAP

1. WALL PANEL HAS BEEN DESIGNED IN ACCORDANCE WITH THE FLORIDA BUILDING CODE (FBC).
2. WALL PANELS SHALL BE 24 GA. (t = 0.022"). MAX. EFFECTIVE COVERING WIDTH = 12".
3. THE WALL PANELS SHALL BE INSTALLED OVER STRUCTURE AS SPECIFIED ON THIS DRAWING.
4. REQUIRED DESIGN WIND LOADS SHALL BE DETERMINED FOR EACH PROJECT. THIS PANEL SYSTEM MAY NOT BE INSTALLED WHEN THE REQUIRED DESIGN WIND LOADS ARE GREATER THAN THE ALLOWABLE DESIGN LOADS.
5. ALL FASTENERS MUST BE IN ACCORDANCE WITH THIS DRAWING & THE FLORIDA BUILDING CODE. IF A DIFFERENCE OCCURS BETWEEN THE MINIMUM REQUIREMENTS OF THIS DRAWING & THE CODE, THE CODE SHALL CONTROL.
6. SHEATHING & SUPPORTS MUST BE DESIGNED TO WITHSTAND WIND LOADS AS REQUIRED FOR EACH APPLICATION AND ARE THE RESPONSIBILITY OF OTHERS.
7. PANELS MAY SPAN BETWEEN HORIZONTAL SUPPORTS AS SHOWN (WALL APPLICATION WITH PANELS ORIENTED VERTICALLY) OR BETWEEN VERTICAL SUPPORTS (WALL APPLICATION WITH PANELS ORIENTED HORIZONTALLY).

DRAWN BY: B.S.	CHECKED BY: D.S.
PLOT:	DATE: 6/12/26

NO.	REVISION DESCRIPTION	BY	DATE

DRAWING TITLE: BOARD & BATTEN SERIES PANEL

METAL SALES MANUFACTURING, LLC
7800 HIGHWAY 60
SELLERSBURG, IN 47172
502–855–4300

CONSULTANTS
BALA SOCKALINGAM, PH.D., P.E.
1216 N LANSING AVE, SUITE C
TULSA, OK 74106
PHONE: 918–492–5992

DRAWING NO. 3060–2 REV.

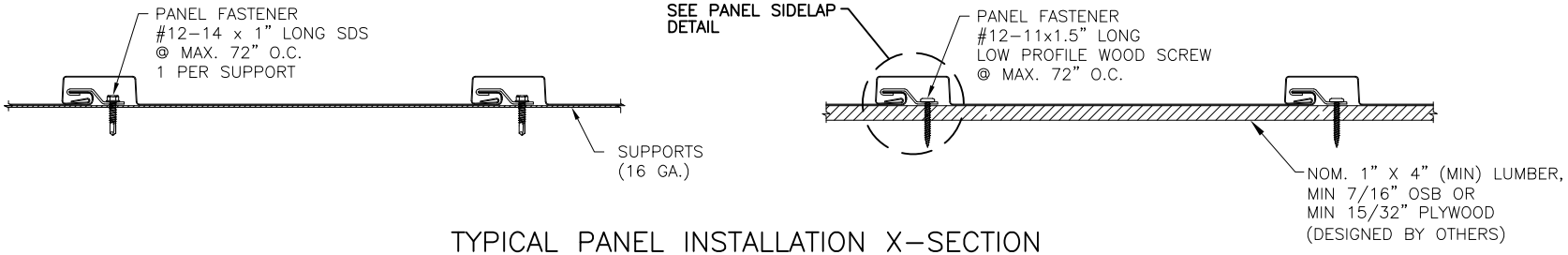

TYPICAL PANEL INSTALLATION X–SECTION

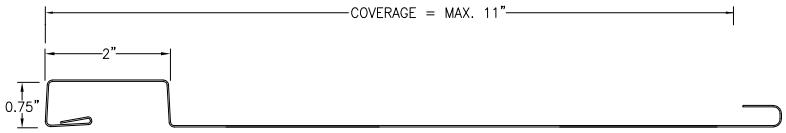

BB75–1111 PANEL

24 GA.

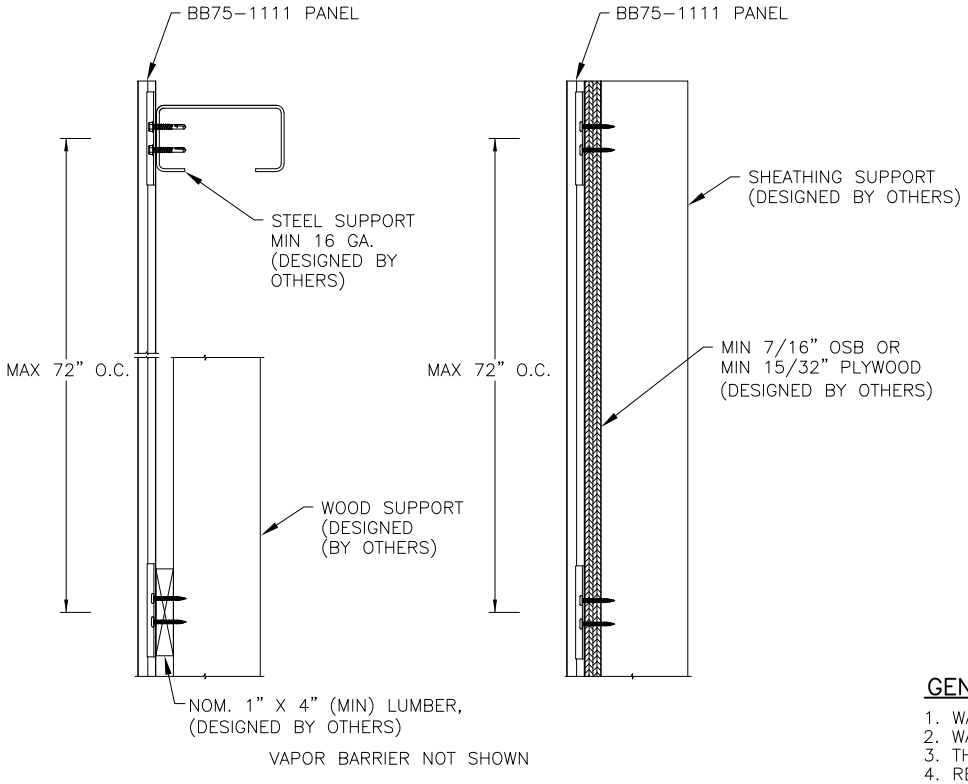

SECTION VIEW

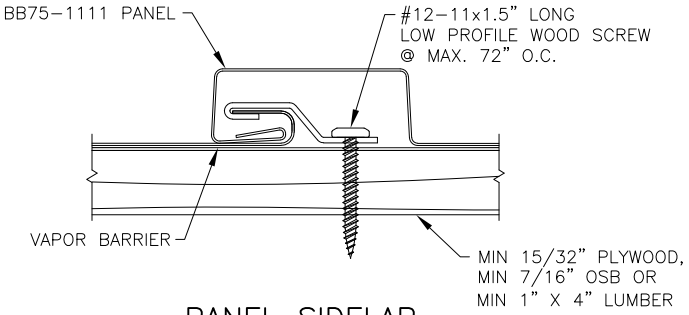

PANEL SIDELAP

GENERAL NOTES:

1. WALL PANEL HAS BEEN DESIGNED IN ACCORDANCE WITH THE FLORIDA BUILDING CODE (FBC).
2. WALL PANELS SHALL BE 24 GA. (t = 0.022"). MAX. EFFECTIVE COVERING WIDTH = 11".
3. THE WALL PANELS SHALL BE INSTALLED OVER STRUCTURE AS SPECIFIED ON THIS DRAWING.
4. REQUIRED DESIGN WIND LOADS SHALL BE DETERMINED FOR EACH PROJECT. THIS PANEL SYSTEM MAY NOT BE INSTALLED WHEN THE REQUIRED DESIGN WIND LOADS ARE GREATER THAN THE ALLOWABLE DESIGN LOADS.
5. ALL FASTENERS & CLIPS MUST BE IN ACCORDANCE WITH THIS DRAWING & THE FLORIDA BUILDING CODE. IF A DIFFERENCE OCCURS BETWEEN THE MINIMUM REQUIREMENTS OF THIS DRAWING & THE CODE, THE CODE SHALL CONTROL.
6. SHEATHING & SUPPORTS MUST BE DESIGNED TO WITHSTAND WIND LOADS AS REQUIRED FOR EACH APPLICATION AND ARE THE RESPONSIBILITY OF OTHERS.
7. PANELS MAY SPAN BETWEEN HORIZONTAL SUPPORTS AS SHOWN (WALL APPLICATION WITH PANELS ORIENTED VERTICALLY) OR BETWEEN VERTICAL SUPPORTS (WALL APPLICATION WITH PANELS ORIENTED HORIZONTALLY).

DRAWN BY: B.S.	CHECKED BY: D.S.
PLOT:	DATE: 6/12/26

NO.	REVISION DESCRIPTION	BY	DATE

DRAWING TITLE: BOARD & BATTEN SERIES PANEL

METAL SALES MANUFACTURING, LLC
7800 HIGHWAY 60
SELLERSBURG, IN 47172
502–855–4300

CONSULTANTS
BALA SOCKALINGAM, PH.D., P.E.
1216 N LANSING AVE, SUITE C
TULSA, OK 74106
PHONE: 918–492–5992

DRAWING NO. 3060–2 REV.

METAL SALES MANUFACTURING, LLC
Min 24 Ga. BBD75-1010 Panel
Allowable Loads

Fastener spacing along length (in)	Allowable Inward Load (psf)	Allowable Outward Loads (psf)		
	For Open Supports	Supports/Sheathings		
		16 ga. Support (See Note 5)	7/16" OSB (See Note 6)	15/32" Plywood/ Dim. Lumber (See Note 6)
12			77.0	
15			65.3	
18			54.4	
21			46.6	
24	144.7	**77.0**	40.8	77.0
27	115.7	68.4	36.3	68.4
30	94.6	61.6	32.6	61.6
33	78.7	56.0	29.7	56.0
36	66.4	51.3	27.2	51.3
39	56.8	47.4	25.1	47.4
42	49.2	44.0	23.3	44.0
45	42.9	41.1	21.8	41.1
48	37.8	38.5	20.4	38.5
51	33.6	36.2	19.2	36.2
54	30.0	34.2	18.1	34.2
57	26.9	32.4	17.2	32.4
60	24.3	30.8	16.3	30.8
63	22.1	29.3	15.5	29.3
66	20.1	28.0	14.8	28.0
69	18.4	26.8	14.2	26.8
72	16.9	**23.7**	13.6	23.7

Notes:

1. The bold numbers indicate allowable loads calculated from test data with safety factor of 2.
2. Maximum coverage width is 10".
3. Section properties and allowables are calculated in accordance with North American Specification for the Design of Cold-Formed Steel Structural Members, 2016 Edition (Reaffirmed 2020), with Supplement 2, 2020 Edition.
4. Allowable load based on stress is the smallest load due to bending, shear and combined bending and shear, web crippling (inward) and deflection limit of L/120.
5. The panels are fastened to min. 16 ga. supports with (1) #12-14 SDS.
6. The panels are fastened to min. 7/16" OSB, 15/32" Plywood or min. nominal 1" x 4" Dimensional Lumber supports with (1) #12-11 low profile wood screws.
7. The wood sheathing (plywood and OSB) must be designed for the inward loads.
8. For open supports, the fasteners should be staggered to equally load all supports.
9. Panels must be installed as per Evaluation Report FL 34027.2 and Metal Sales current installation procedure.
10. Two or more spans condition.

1216 N Lansing Ave., Suite C
Tulsa, Ok 74106
918 492 5992

Bala Sockalingam, Ph.D., P.E.
FL 62240

METAL SALES MANUFACTURING, LLC
Min 24 Ga. BBD75-1212 Panel
Allowable Loads

Fastener spacing along length (in)	Allowable Inward Load (psf)	Allowable Outward Loads (psf)		
	For Open Supports	Supports/Sheathings		
		16 ga. Support (See Note 5)	7/16" OSB (See Note 6)	15/32" Plywood/ Dim. Lumber (See Note 6)
12			67.8	
15			54.2	
18			45.2	
21			38.7	
24	120.6	**77.0**	33.9	68.5
27	96.5	68.4	30.1	60.8
30	78.8	61.6	27.1	54.8
33	65.6	56.0	24.7	49.8
36	55.4	51.3	22.6	45.6
39	47.4	47.4	20.9	42.1
42	41.0	44.0	19.4	39.1
45	35.8	41.1	18.1	36.5
48	31.5	38.5	17.0	34.2
51	28.0	36.2	16.0	32.2
54	25.0	34.2	15.1	30.4
57	22.4	32.4	14.3	28.8
60	20.3	30.8	13.6	27.4
63	18.4	29.3	12.9	26.1
66	16.8	28.0	12.3	24.9
69	15.4	26.8	11.8	23.8
72	14.1	**23.7**	11.3	22.8

Notes:

1. The bold numbers indicate allowable loads calculated from test data with safety factor of 2.
2. Maximum coverage width is 12".
3. Section properties and allowables are calculated in accordance with North American Specification for the Design of Cold-Formed Steel Structural Members, 2016 Edition (Reaffirmed 2020), with Supplement 2, 2020 Edition.
4. Allowable load based on stress is the smallest load due to bending, shear and combined bending and shear, web crippling (inward) and deflection limit of L/120.
5. The panels are fastened to min. 16 ga. supports with (1) #12-14 SDS.
6. The panels are fastened to min. 7/16" OSB, 15/32" Plywood or min. nominal 1" x 4" Dimensional Lumber supports with (1) #12-11 low profile wood screws.
7. The wood sheathing (plywood and OSB) must be designed for the inward loads.
8. For open supports, the fasteners should be staggered to equally load all supports.
9. Panels must be installed as per Evaluation Report FL 34027.2 and Metal Sales current installation procedure.
10. Two or more spans condition.

1216 N Lansing Ave., Suite C
Tulsa, Ok 74106
918 492 5992

Bala Sockalingam, Ph.D., P.E.
FL 62240

METAL SALES MANUFACTURING, LLC
Min 24 Ga. BB75-1111 Panel
Allowable Loads

Clip spacing along length (in)	Allowable Inward Load (psf)	Allowable Outward Loads (psf)		
	For Open Supports	Supports/Sheathings		
		16 ga. Support (See Note 5)	7/16" OSB (See Note 6)	15/32" Plywood/ Dim. Lumber (See Note 6)
24	149.6	**77.0**	74.2	77.0
27	123.0	68.4	66.0	68.4
30	100.8	61.6	59.4	61.6
33	84.1	56.0	54.0	56.0
36	71.1	51.3	49.5	51.3
39	60.9	47.4	45.7	47.4
42	52.8	44.0	42.4	44.0
45	46.1	41.1	39.6	41.1
48	40.7	38.5	37.1	38.5
51	36.1	36.2	34.9	36.2
54	32.3	34.2	33.0	34.2
57	29.0	32.4	31.2	32.4
60	26.2	30.8	29.7	30.8
63	23.8	29.3	28.3	29.3
66	21.7	28.0	27.0	28.0
69	19.9	26.8	25.8	26.8
72	18.3	**23.7**	23.7	23.7

Notes:

1. The bold numbers indicate allowable loads calculated from test data with safety factor of 2.
2. Maximum coverage width is 11".
3. Section properties and allowables are calculated in accordance with North American Specification for the Design of Cold-Formed Steel Structural Members, 2016 Edition (Reaffirmed 2020), with Supplement 2, 2020 Edition.
4. Allowable load based on stress is the smallest load due to bending, shear and combined bending and shear, web crippling (inward) and deflection limit of L/120.
5. The panels are fastened to min. 16 ga. supports with low concealed fastened clip and (2) #12-14 SDS.
6. The panels are fastened to min. 7/16" OSB, 15/32" Plywood or min. nominal 1" x 4" Dimensional Lumber supports with low concealed fastened clip and (2) #12-11 low profile wood screws.
7. The wood sheathing (plywood and OSB) must be designed for the inward loads.
8. For open supports, the clips should be staggered to equally load all supports.
9. Panels must be installed as per Evaluation Report FL 34027.2 and Metal Sales current installation procedure.
10. Two or more spans condition.

1216 N Lansing Ave., Suite C
Tulsa, Ok 74106
918 492 5992

Bala Sockalingam, Ph.D., P.E.
FL 62240