INSTALLATION GUIDE

RESYSTA 6'' and 4'' FLAT BOARD SIDING SYSTEM

1. **Introduction**
   - 1.1 Material Components
   - 1.2 Basics
   - 1.3 Scope of Profiles
2. **Installation – Procedure**
   - **Sec.1** Batten Substructure
   - **Sec.2** Trim and Accessory Option
   - **Sec.3** Horizontal Siding Application
   - **Sec.4** Multi-Board Horizontal Siding Application
   - **Sec.5** Vertical Siding Application
   - **Sec.6** Multi-Board Vertical Siding Applications
   - **Sec.7** Air Barrier Requirements
   - **Sec.8** Finishing Option – Trims and Hollow Cap
   - **Sec.9** Prime and Stain System
3. **Safety Warning**

1. Introduction

Resysta is an extremely durable, timber look-alike, decking material. It is resistant to damage from the sun, rain, frost and even salt water. Unlike wood, it requires minimal maintenance and is highly resistant to pests, mold and cracks. Unlike other composite materials, it closely resembles the look and feel of natural wood, with a smooth surface finish. Resysta meets most of the future environmentally sustainable material requirements concerning recycled and fully recyclable materials. Resysta is used for its architectural aesthetic, and not for structural support.

1.1 Material Components

A combination of these three basic raw material make up the simple components that create Resysta. This innovative materials offers designers and architects new creative horizons to utilize its compelling and unique appearance.

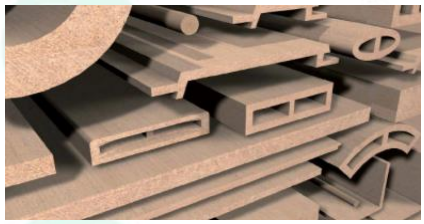

Approx. 60% RICE HUSK + Approx. 22% COMMON SALT + Approx. 18% MINERAL OIL = RESYSTA

1.2 Basics

OVERVIEW OF PARTS

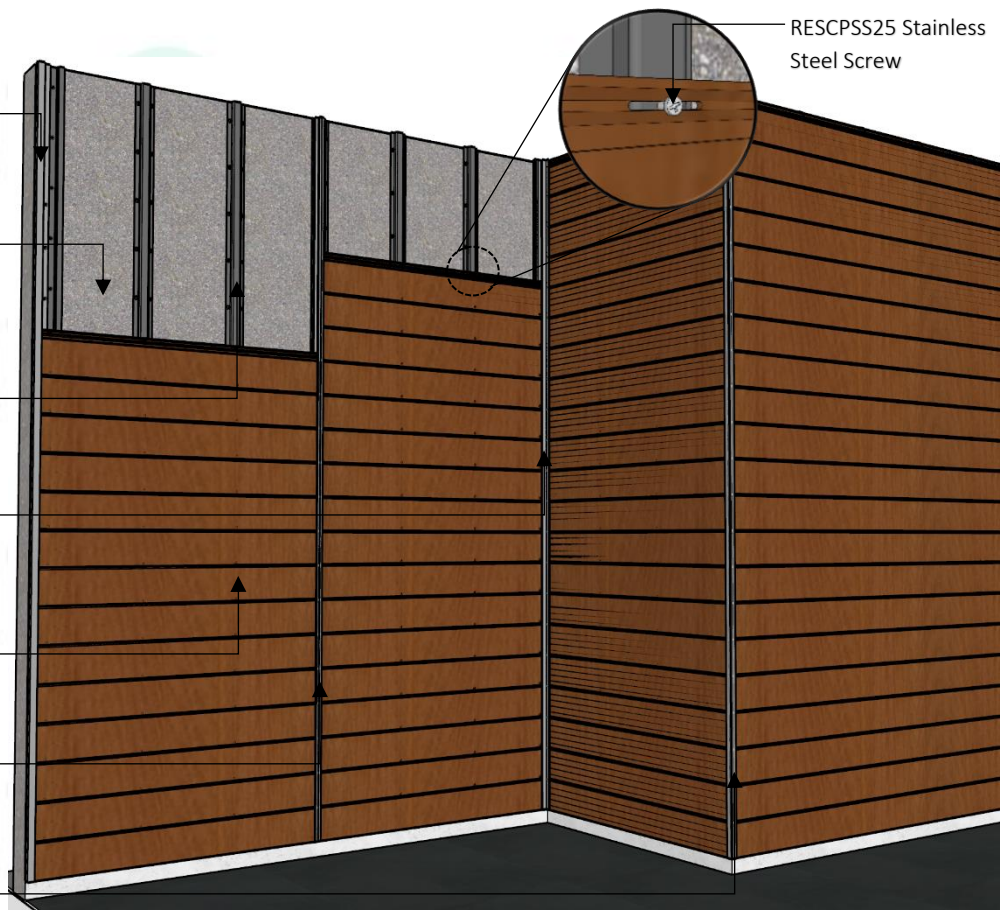

ISOMETRIC VIEW

BASIC PARTS OF SIDING BOARD

1.3 Scope of Delivery

NO.	PRODUCT NAME AND SPECIFICATION	ISOMETRIC VIEW	FRONT VIEW
1	**RESCPH120412** ½'' x 4'' x 12' Hollow Siding Profile		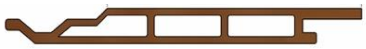
2	**RESCPH120612** ½'' X 6'' X 12' Hollow Siding Profile		
3	**RESSHTC10** ¾'' X 1 ½'' Siding Hat Channel Mill Finish	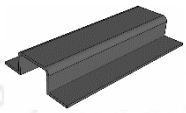	
4	**RESSHTC10P** ¾'' X 1 ½'' Siding Hat Channel Punched Mill Finish	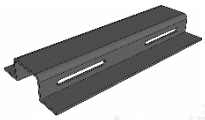	
5	**RESSJM10** 5/8'' x 1'' J Mold	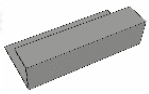	
6	**RESSOC10** 5/8'' x 1'' Outside Corner Mold	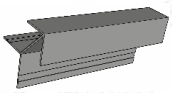	
7	**RESSIC10** 5/8'' X 1'' Inside Corner Mold	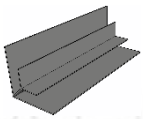	
8	**RESSHM10** 5/8'' X 1'' H Mold	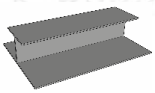	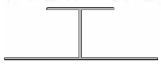
9	**RESSJS10** Starter J-Strip	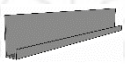	
10	**RESCPSS25** 1'' TEEC Shoulder Stainless Steel Screw		

Table 1.1 "Scope of Delivery"

NOTE: Table above shows products commonly used for wall siding. To view a complete list of products, please refer to our Resysta brochure or visit our web site *www.resystausa.com*

IMPORTANT: Five Major Bullet Points You Must Follow for a Successful Resysta Siding Installation

- **Screw Placement**
- **Room for Expansion and Contraction**
- **Hard Fastening of each Plank**
- **Top to Bottom Ventilation**
- **Span over 6'' between supports, 3 hat channels are required**

NOTE:

Proper planning of the siding layout is essential for ease of installation of siding boards and siding components. Thoroughly read the following siding assembly instructions and obtain all necessary building permits prior to starting your installation. Decide finishing and trimming options prior to starting the project to ensure siding finishing detail is uniform for all sides of the building. Installation is the sole responsibility of the installer. Resysta Company assumes no responsibility whatsoever with respect to the installation. The information contained herein is provided for guidance purposes only and should not be relied upon as any absolute representation by Resysta.

Safety Tips:

1. Always check for power, gas, and water lines before installing.
2. Always wear safety glasses when operating power equipment.

Assembly Tips:

1. Battens should be flat and level to each other. Siding will follow the contour of the wall.
2. Resysta siding system is not a rain screen or water proof system. Resysta siding is a water shed system.
3. Proper wall preparation according to local building codes and wall covering manufacture's recommendations should be adhered to. This includes but is not limited to flashing all openings.
4. All holes should be predrilled and installation holes should be slotted.
5. Only use construction fastening material and hardware suitable for outdoor use (e.g. stainless steel screws). Recommended is the use of RESCPSS25 shoulder screw.
6. Always consider the linear expansion of Resysta, which is dependent on the temperature but not the air humidity. See Table 1.2 "Resysta Expansion" for more information.
7. Cut-off pieces and/or abrasive dust must be disposed of separately. Please comply with regulations of your competent waste management. You may under no circumstances burn Resysta material.
8. Cutting to length should be carried out at consistent material temperature. Therefore, the material should be stored in the shade or in areas where it is not exposed to direct sunlight. The material can warm up considerably in the sun, leading to an increased change in length. In the case of more distinct fluctuations in material temperature, cutting to length may have to be adapted accordingly.
9. Please store Resysta products flat on level surface.

Code Compliant Batten Spacing

Part Number	Part Description	Batten Span (in)	Minimum Steel Gage Size
RESCPH120612	Siding Board Flat 1/2" x 6" (0.530" x 6")	16	18
RESCPH120412	Siding Board Flat 1/2" x 4" (0.530" x 4")	16	18

Table 1.2 "Batten Spacing Requirements"

Recommendation for Batten Spacing

If the siding is being installed in a hot southern location and will be exposed to direct sunlight for the majority of each day and/or the siding will be stained a dark color, the batten spacing is suggested be reduced to 8" or 12" center-to-center for all siding profiles.

Expansion / Contraction of Siding

Resysta Expansion – Contraction Guide	
Profile Length	**12 ft**
Expansion / Contraction amount (approx.. 0.3% over 90 oF variation in temperature)	7/16" (0.432")

Table 1.3 Expansion – Contraction: Average expected expansion – contraction (this can vary based on geographical region).

Resysta Siding Board Gap Guide					
	Trim Gap of Siding Boards				**H-Channel Gap**
Temperature at Installation	**Below 30 oF**	**60 oF**	**90 oF**	**120 oF**	
Amount for Siding Profile Length of 12 ft.	7/16"	5/16"	3/16"	0"	1/4"

Table 1.4 "Resysta Expansion" – Ensure a steady material temperature when cutting the boards to size, i.e. the cutting has to be done under constant conditions, e.g. inside or in shade.

Always consider linear expansion of Resysta profiles during the installation of siding products. If temperatures fluctuate during the installation, the gaps placed between the ends of the boards and a corner, window, or door must change with the temperature. Use the guide above to gap boards during installation.

Expansion – Contraction Tips:

1) Control Piece

   at the start of the day cut a length of board that is desired to be installed and keep this board in the same area as the cutting and storage of the remaining boards. This board will be a "Control Piece" to reference when cutting other boards to be installed. Throughout the day the "Control Piece" can be referenced and the saw cuts adjusted accordingly as the boards expand and/or contract. Heat from the sun will cause Resysta boards to expand so if the material is stored in the shade keep the "Control Piece" in the shade as well.

Example:

If 12ft boards are being installed put aside one 12ft board at the start of the day. Reference these boards throughout the day and adjust the cutting of the other boards to match

2) Control Gap

   at the start of the installation place the siding gap according to Table 1.2 and mark the first gap made. This gap will be a "Control Gap" to reference when gapping the remaining boards to be installed. Throughout the installation reference back to this "Control Gap" to match the other gaps being installed. This will ensure that all the gaps installed are the same.

SECTION 1 – Batten Substructure

General Notes on Batten Substructure

Resysta siding boards can be installed in horizontal or vertical applications and the batten substructure should be planned to accommodate how the siding boards will be installed.

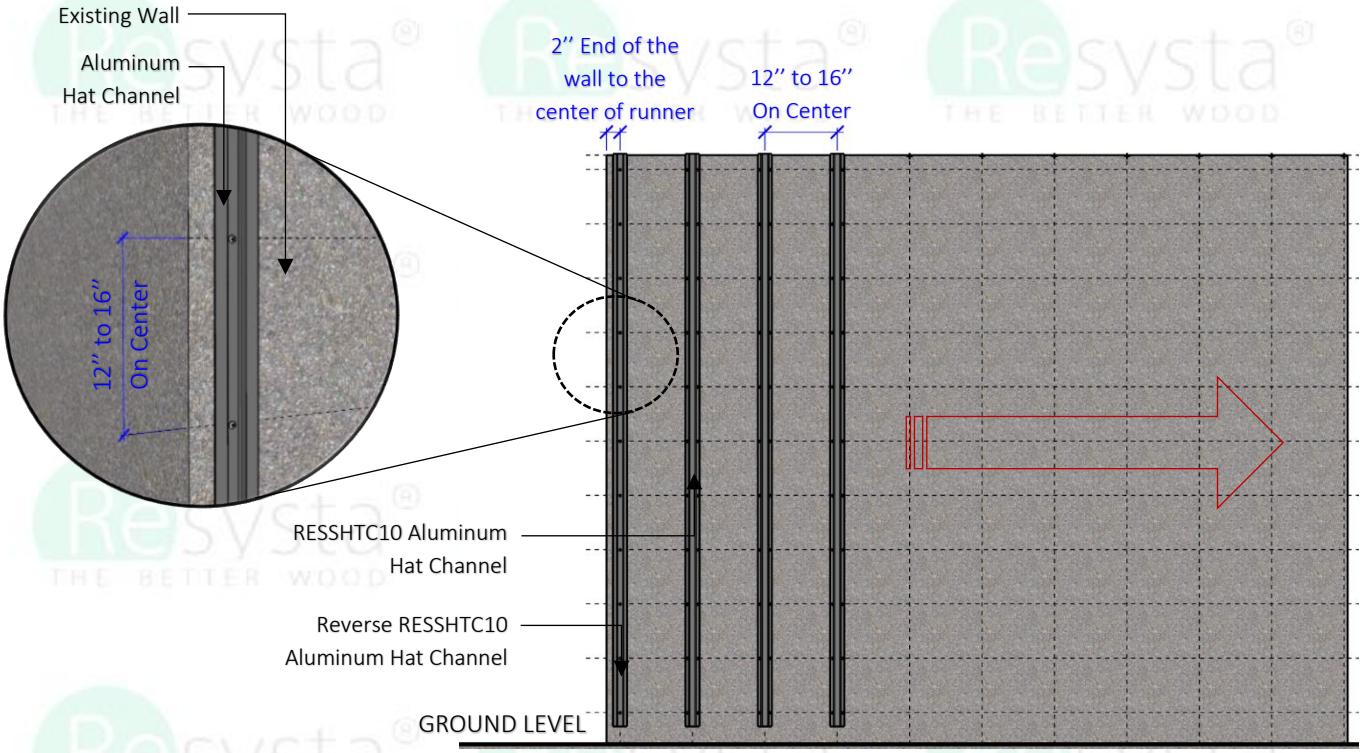

FRONT ELEVATION

HORIZONTAL SIDING / VERTICAL BATTENS

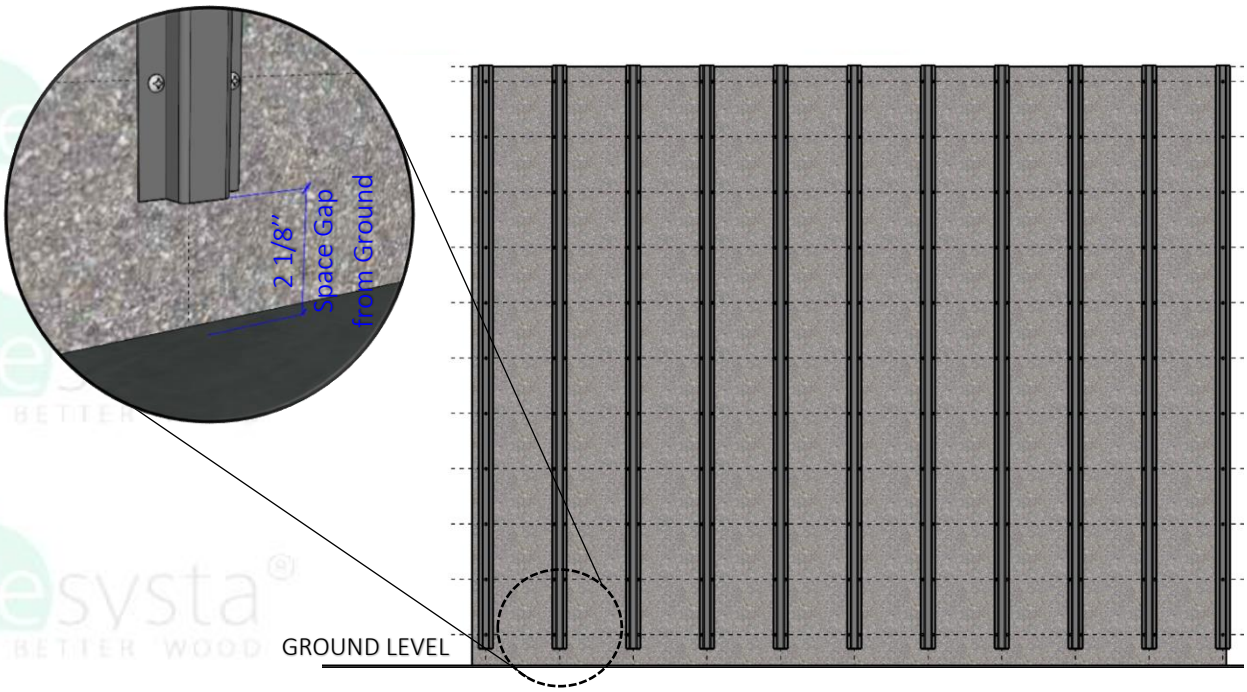

FRONT ELEVATION

HORIZONTAL SIDING / VERTICAL BATTENS

Note:
For Vertical Siding Installation a Perforated Hat Channel must be used to allow airflow and drainage of water.

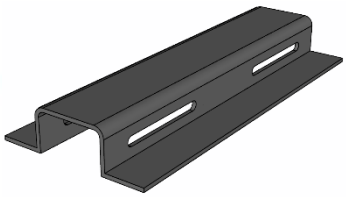

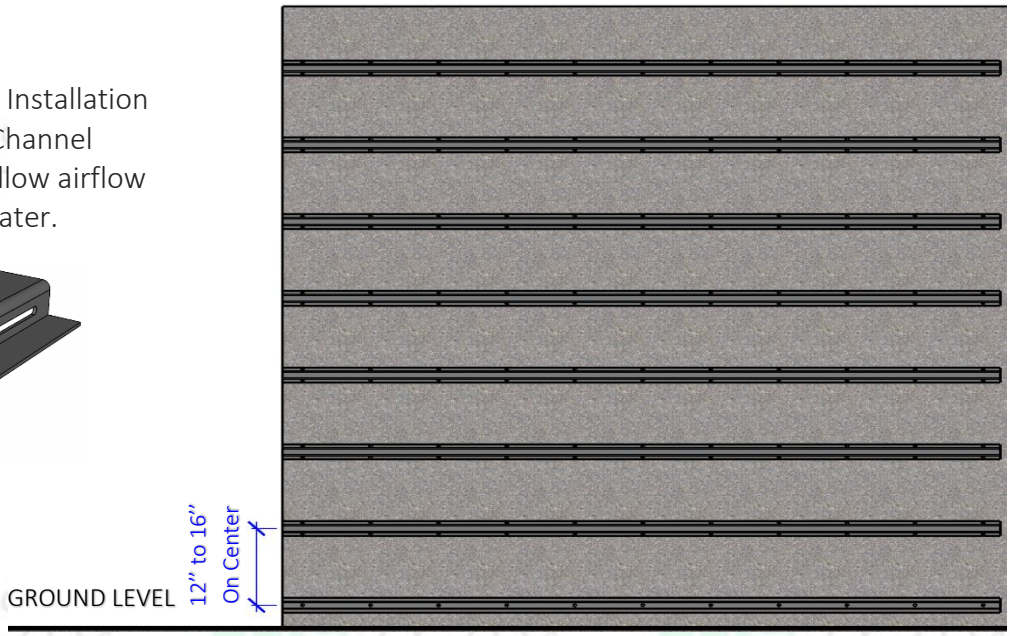

FRONT ELEVATION
VERTICAL SIDING / HORIZONTAL BATTENS

Resysta siding boards require a minimum of 3" from the ground to the start of the siding board in both horizontal and vertical installations. Plan the batten substructure and wall assembly accordingly to accommodate siding installation while adhering with local building code requirements.

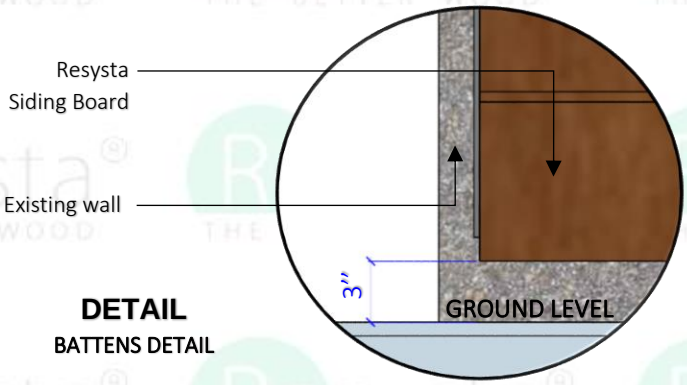

DETAIL
BATTENS DETAIL

Resysta Aluminum Batten Substructure

Install the battens and secure to the frame substructure in compliance with local building codes. Ensure that the installed battens do not exceed the "Batten Spacing Requirements" of Table 1.2. On walls where two siding boards will be used end-to-end, a minimum of two battens must be used to accommodate the fastening of the siding boards and any trim pieces desired to the batten substructure where the boards meet. Prior to installing the Resysta siding boards, ensure that the batten installation provides a minimum ¾" air gap behind the siding boards and there is sufficient support for all siding boards and trim accessories. This is often achieved through the installation of battens with a minimum thickness of ¾"

Battens should be installed on top of a code compliant sheathing with fasteners and fastener spacing sufficient to accommodate all loads imposed upon it by the Resysta siding board, trim components, and any other accessories attached to the battens. Resysta siding boards must be attached to aluminum battens with Resysta Shoulder stainless steel screws (RESCPSS25 Screw) taking care to not penetrate the weather barrier. If the weather barrier is going to be penetrated reference the weather barrier manufacture's recommendations.

Notes on Resysta Shoulder Screw RESCPSS25

SECTION 2 – Trim and Accessory Options

Aluminum Siding Trim systems made for Resysta siding boards are recommended for covering the ends and gaps of siding boards. Suggested supply includes, but is not limited to: Outside Corner Trim, Inside Corner Trim, Starter Strip (to start siding boards), H-Channel Trim (to cover wall gaps), J-Channel Trim (used for siding board termination). Aluminum Siding Trims are standard aluminum alloy 6063 T5 and have a .050" nominal wall thickness. Aluminum Siding Trims come in 10' lengths and shall have a standard Mill Finish for field priming and painting unless otherwise specified.

Aluminum Siding Trim – General Installation Guidelines

Aluminum Siding Trim must be cut with a 150 tooth carbide-tip blade for nonferrous metal. Blade Lubricant must be applied to the blade before each cut and the lubricant should be cleaned from the trim prior to installation. None of Siding Trim should be installed horizontally unless weep holes are drilled at 8" intervals to allow for moisture to escape from behind the face flange. Exceptions to this are 1) Siding Starter Strip installed in any direction and 2) Siding J-Channel Trim when it is installed horizontally with its face flange pointing down.

Resysta Aluminum Siding Trim – Aluminum Batten Installation Guidelines

When using metal battens, either steel or aluminum, it is recommended to use the RESCPSS25 Screw which can be driven through the aluminum siding trim and into the metal batten. Trim should be fastened 16" on center for either horizontal or vertical installations. If the batten substructure spacing is reduced for the siding boards the trim should be fastened at the same interval as the siding. Be aware of fastener placement for the siding trim so as to not hinder the installation of the Resysta siding boards.

SECTION 3 – Horizontal Siding Applications

STEP 3.1

Pre apply all finishing trim accessories such as trim around corners, windows, and doors according to the pre plan layout and following the manufacture's recommendations. Ensure that all trim is level and square. Battens should be installed vertically.

STEP 3.2

Aluminum starter strip is required to install the Resysta siding board. Attach the starter strip at the bottom of the battens following the fastener and spacing recommendations in Section 2. The Resysta siding boards will hang ½" below the bottom of the starter strip therefore the starter strip should be attached accordingly per the pre plan layout.

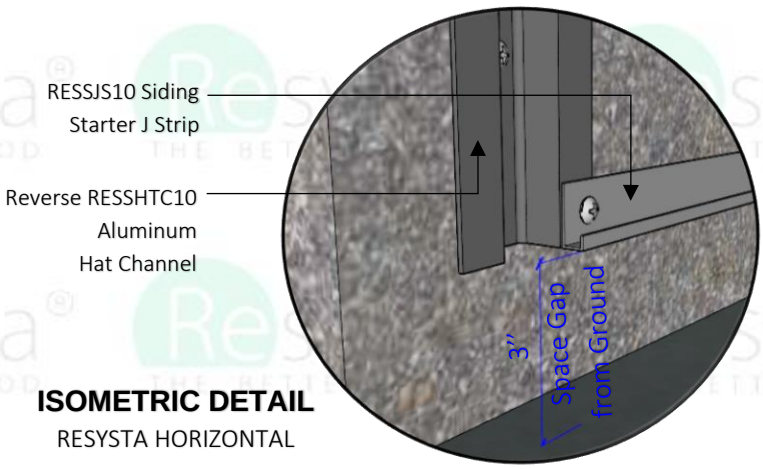

ISOMETRIC DETAIL
RESYSTA HORIZONTAL

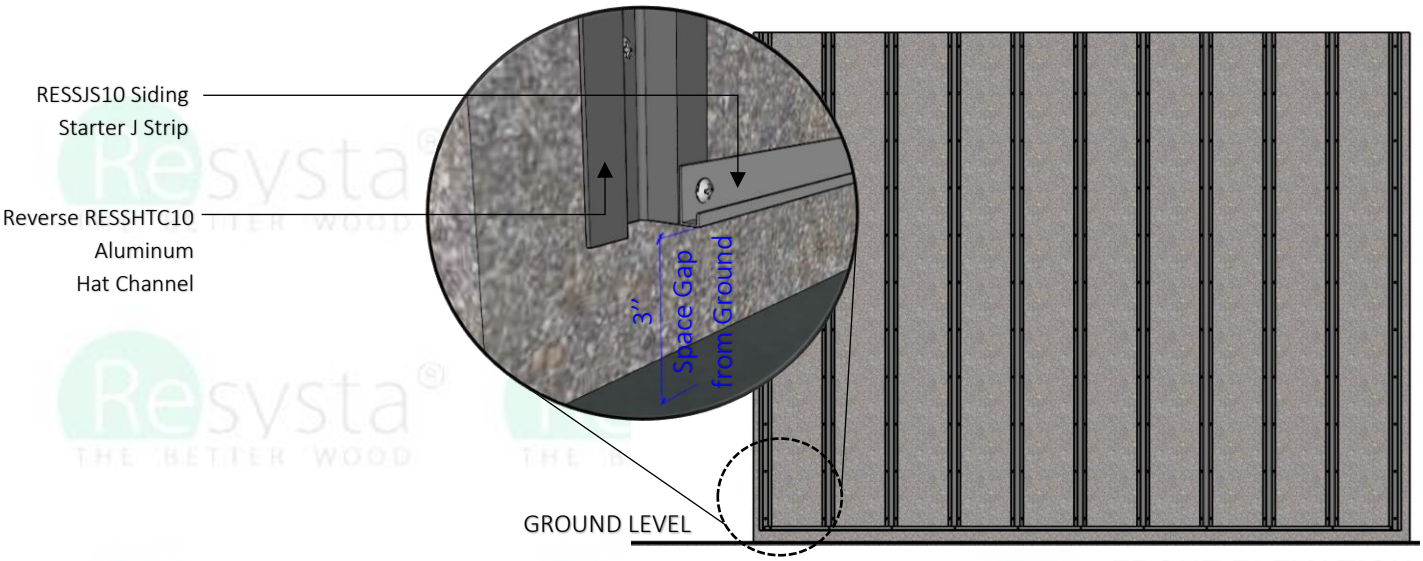

FRONT ELEVATION

RESYSTA HORIZONTAL SIDING BOARD

STEP 3.3

Hook the groove end of the first siding board into the Starter J Strip.

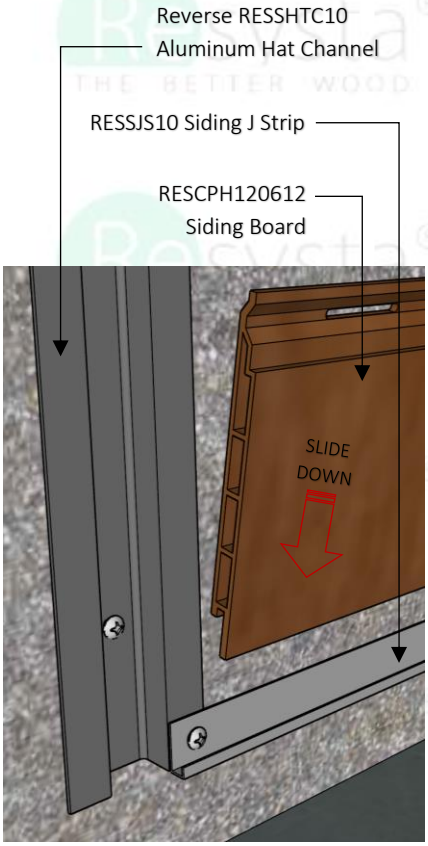

DETAIL 1

RESYSTA HORIZONTAL SIDING

Slide down the first Resysta Siding board into Starter J Strip.

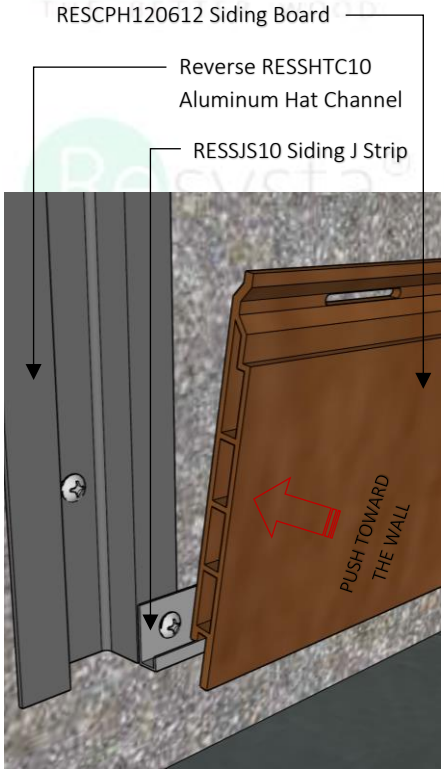

DETAIL 2

RESYSTA HORIZONTAL SIDING

Hook the groove end of the first Resysta Siding board into the Starter J Strip with SS screw.

DETAIL3

RESYSTA HORIZONTAL SIDING

Push the Resysta Siding board perpendicular into the runner and screw direct to the groove.

STEP 3.4

Install RESCPSS25 screws into all slotted holes except the center hole. DO NOT over tighten the screws. The screws should be placed in the center of the slotted hole and loose enough to allow the board to move freely from side to side to allow for expansion and contraction.

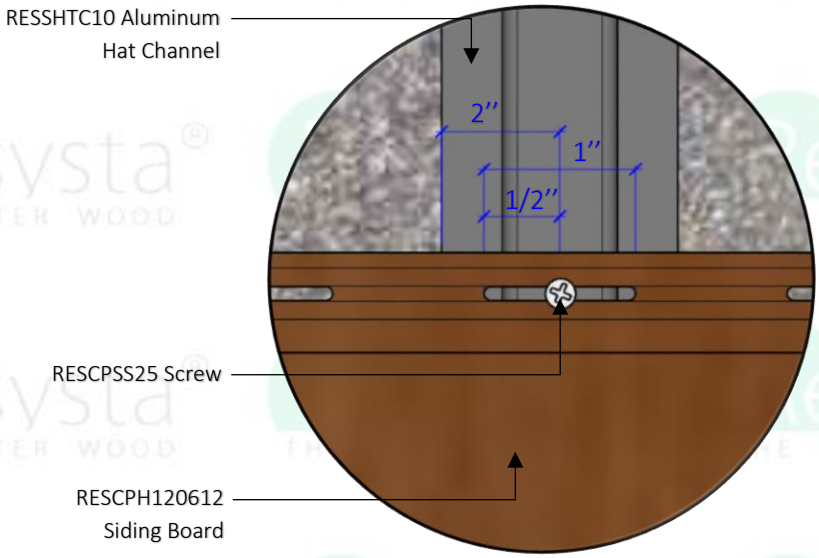

ISOMETRIC DETAIL

RESYSTA HORIZONTAL SIDING BOARD

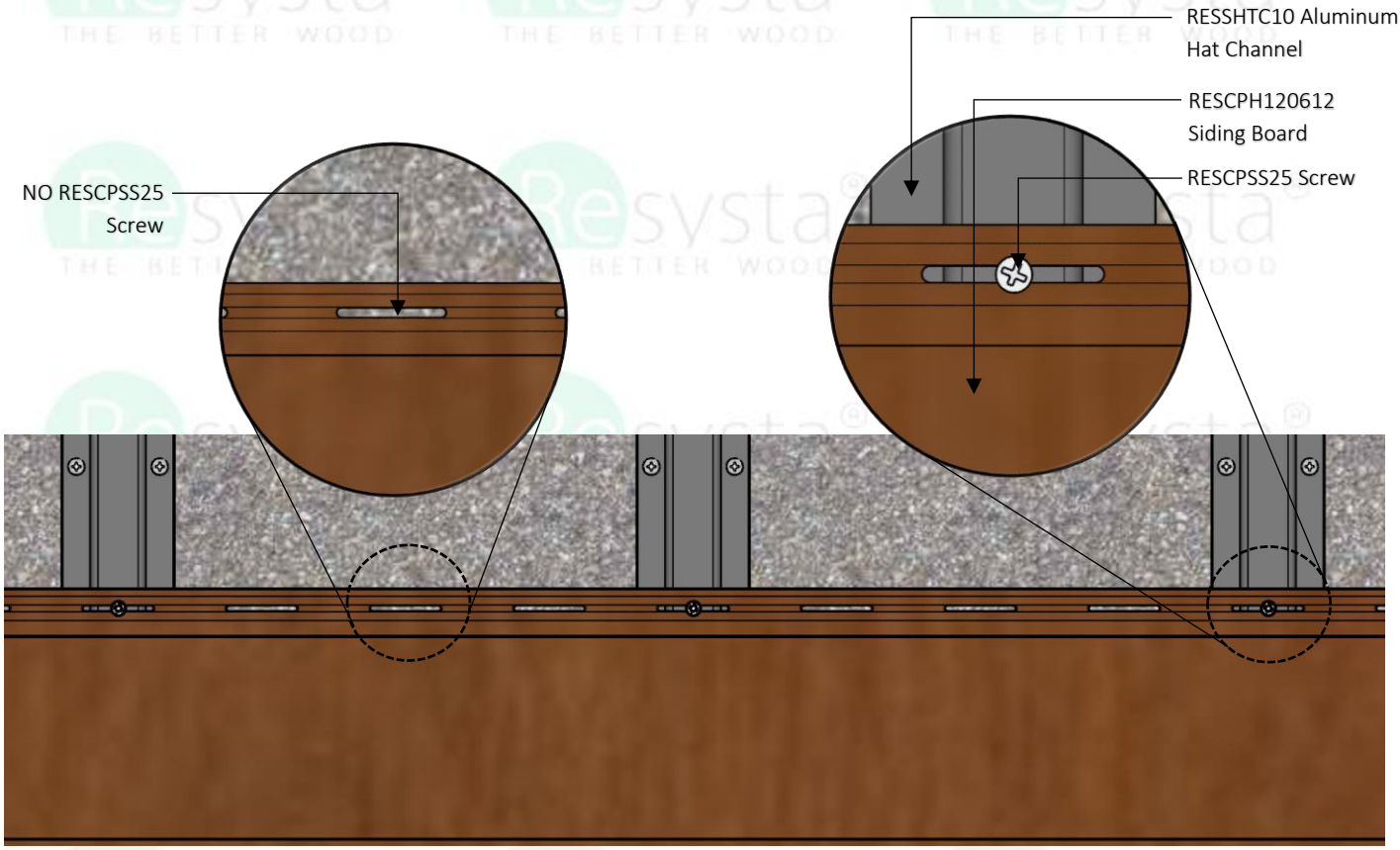

FRONT ELEVATION

RESYSTA HORIZONTAL SIDING

Note

If installing more than one board in width, please refer to Section 4 – Horizontal Multi Board Siding Applications

STEP 3.5

Install the final two RESCPSS25 screw in the slotted hole in the center of the board. This will allow for expansion and contraction evenly to each side of the assembly.

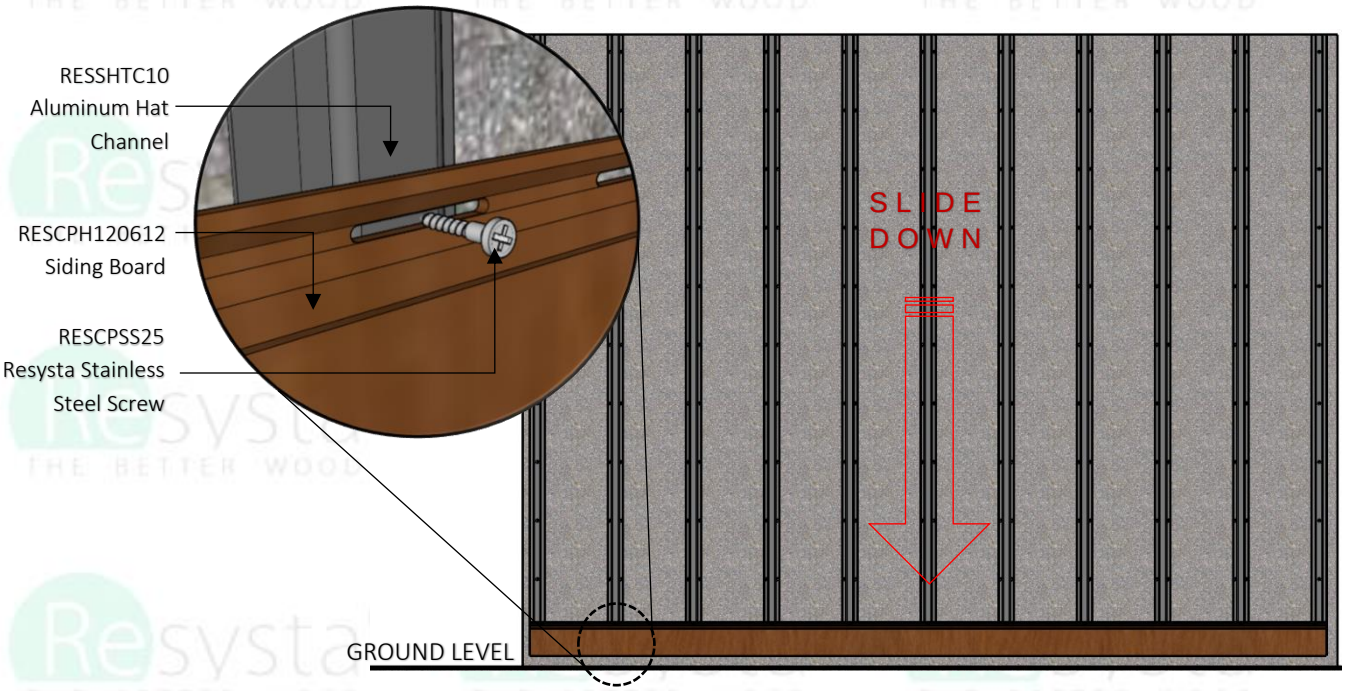

FRONT ELEVATION

RESYSTA HORIZONTAL SIDING

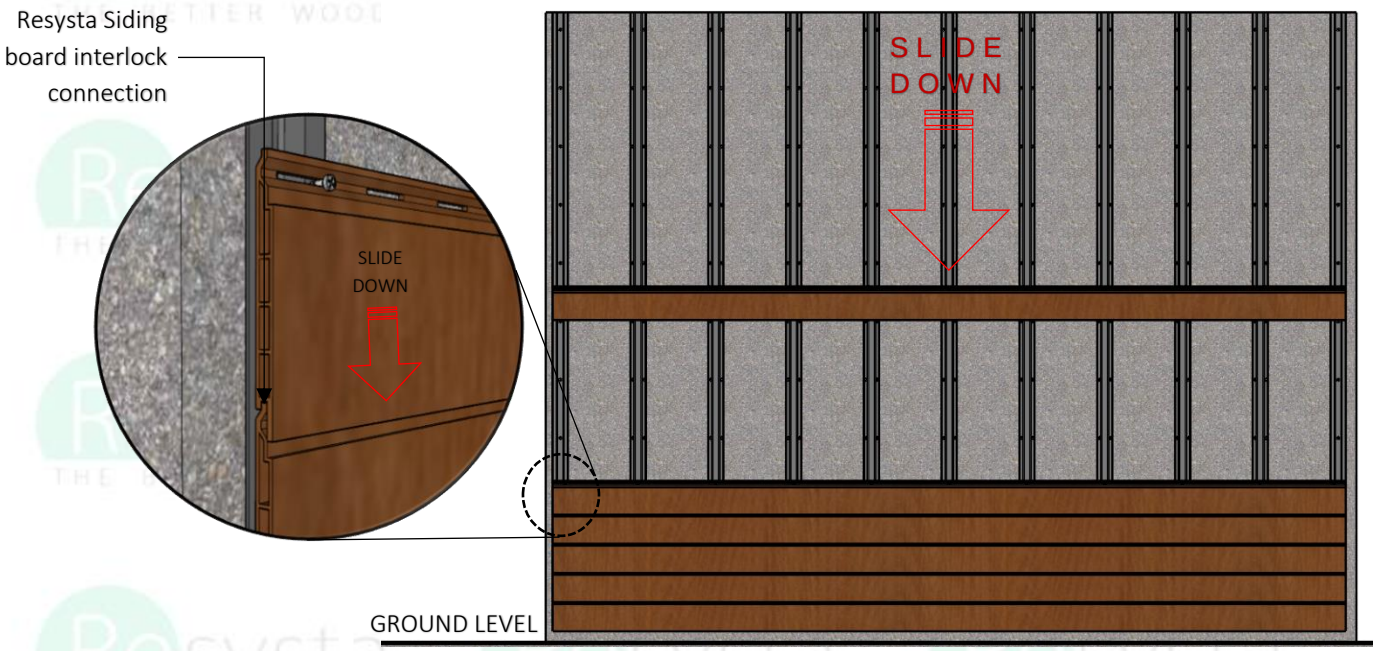

FRONT ELEVATION

RESYSTA HORIZONTAL SIDING

STEP 3.6

Hook the groove end of the next board onto the tongue of the installed siding board.

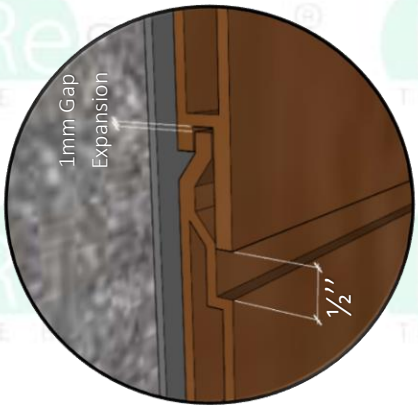

Note:
Ensure a 1mm gap expansion using shim with a space gap of ½'' from one board to another board.

ISOMETRIC DETAIL
RESYSTA HORIZONTAL SIDING

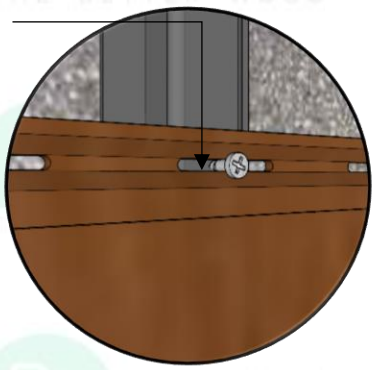

ISOMETRIC DETAIL
SIDING BOARD INSTALLATION

FRONT ELEVATION
RESYSTA HORIZONTAL SIDING

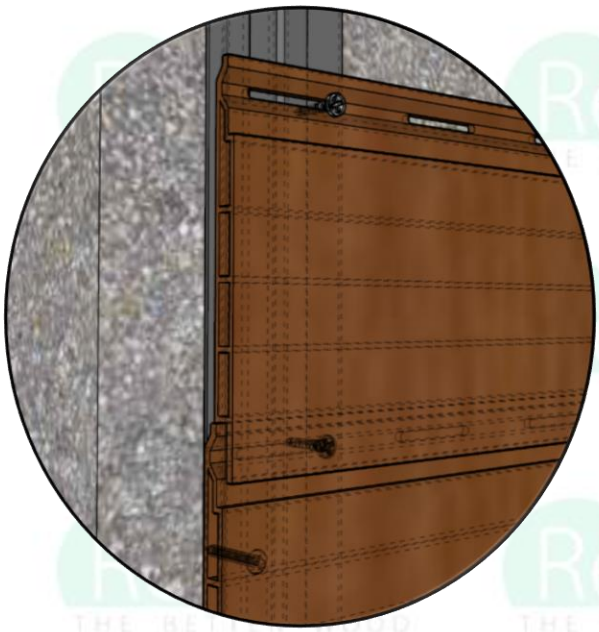

ISOMETRIC DETAIL
RESYSTA HORIZONTAL SIDING

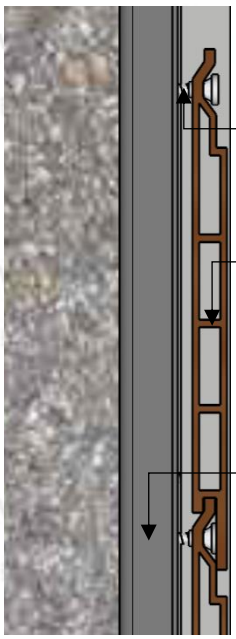

SECTION
RESYSTA HORIZONTAL SIDING

STEP 3.7

Install the J Mold at the end of the Hat Channel to finish the siding.

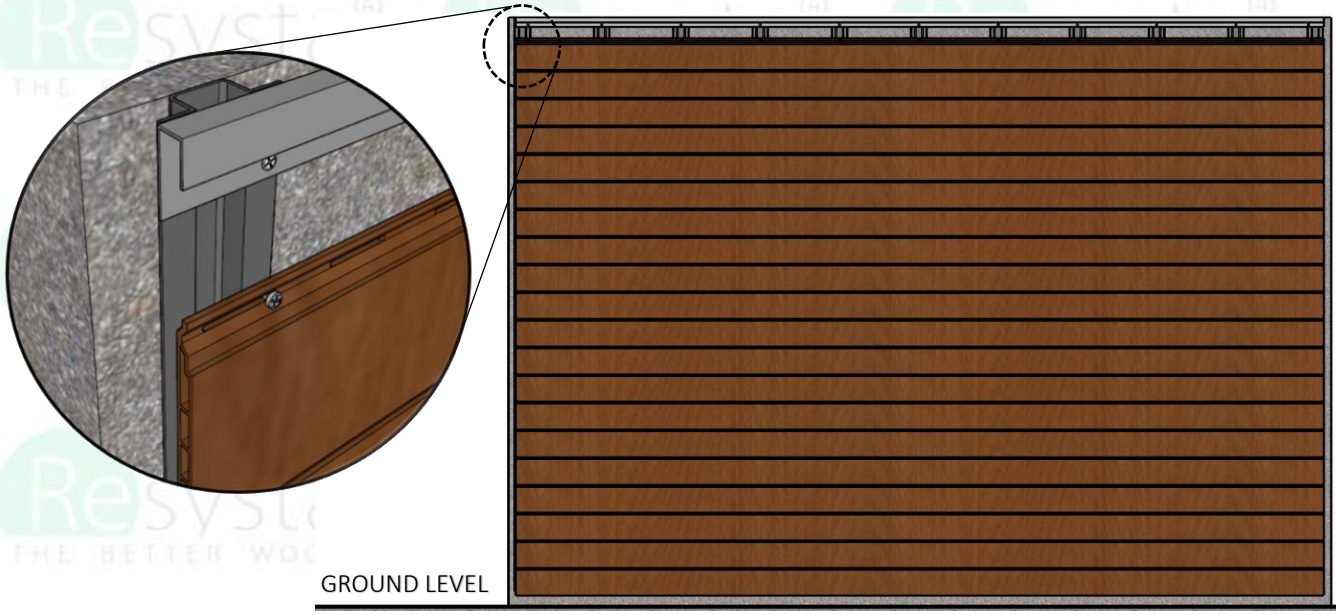

FRONT ELEVATION

RESYSTA HORIZONTAL SIDING

STEP 3.8

Continue installing siding boards as outlined in Section 3. Rip last siding board into size to finished.

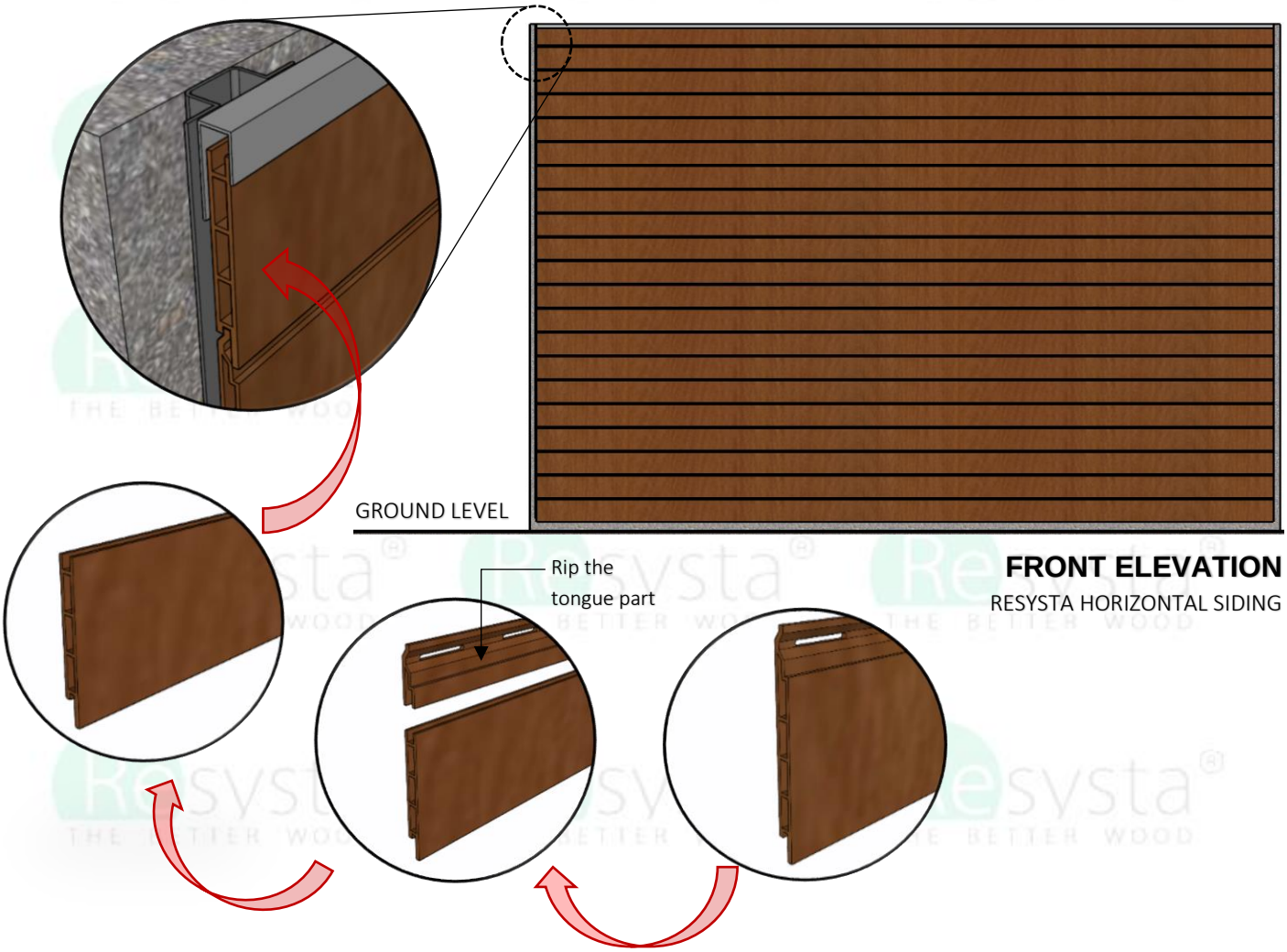

FRONT ELEVATION

RESYSTA HORIZONTAL SIDING

2 Board Wide Installation without the H-Channel Trim (24ft max width)

STEPS 4.1.1

Ensure that two battens have been installed where boards are to be installed end to end.

STEP 4.1.2

Follow Steps 3.1, 3.2, and 3.3 from Section 3 to install finishing trim, starter strip, and hook in the 1st siding board.

STEP 4.1.3

Install RESCPSS25 screws into all slotted holes except the hole closest to the abutted joint on both siding boards. DO NOT over tighten the screws. The screws should be placed in the center of the slotted hole and loose enough to allow the board to move freely from side to side to allow for expansion and contraction.

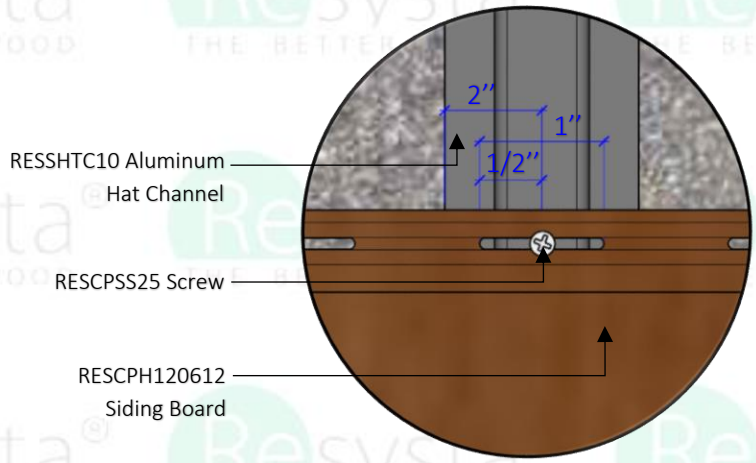

ISOMETRIC DETAIL
RESYSTA HORIZONTAL SIDING

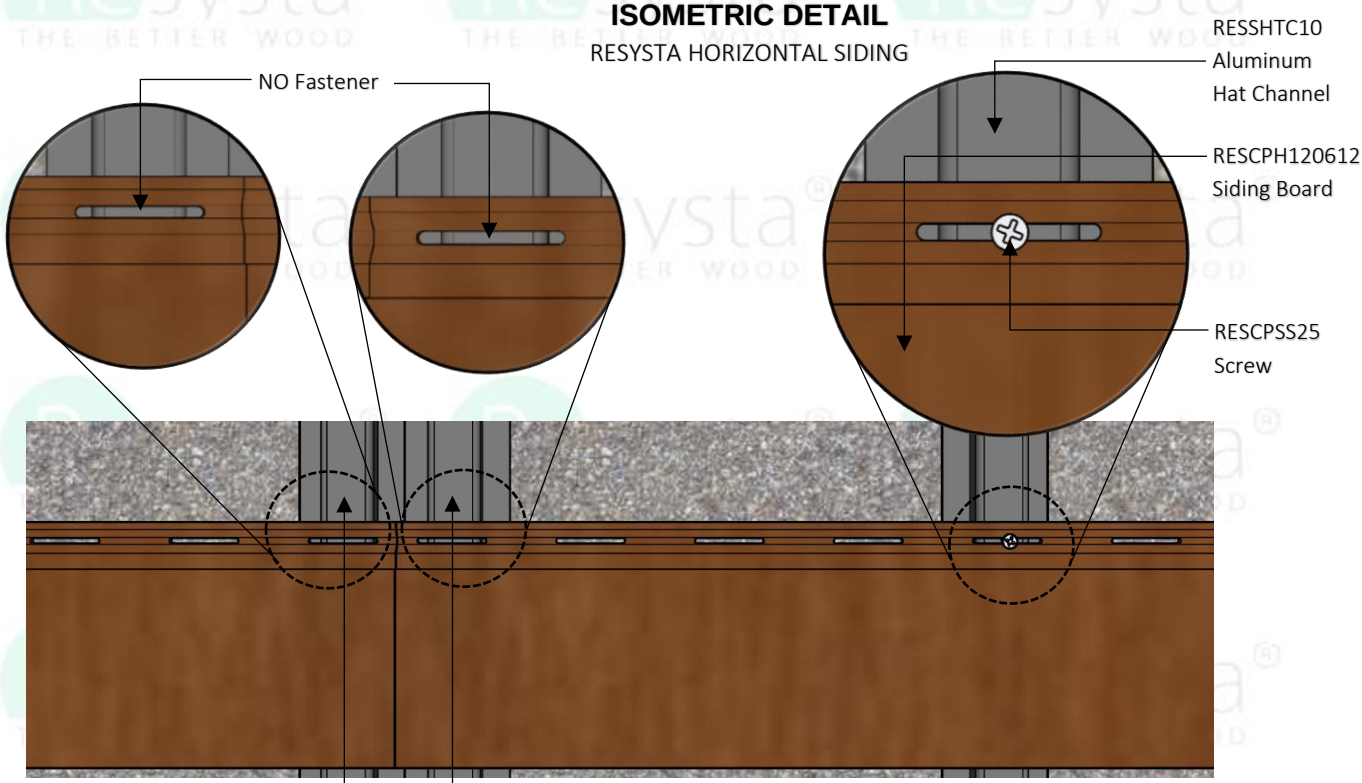

FRONT ELEVATION
RESYSTA HORIZONTAL SIDING

STEP 4.1.4

Install one RESCPSS25 screw in the slotted hole closest to the abutted joint on both siding boards. This will control expansion and contraction evenly to the outside of the siding boards while keeping the abutting joint snug.

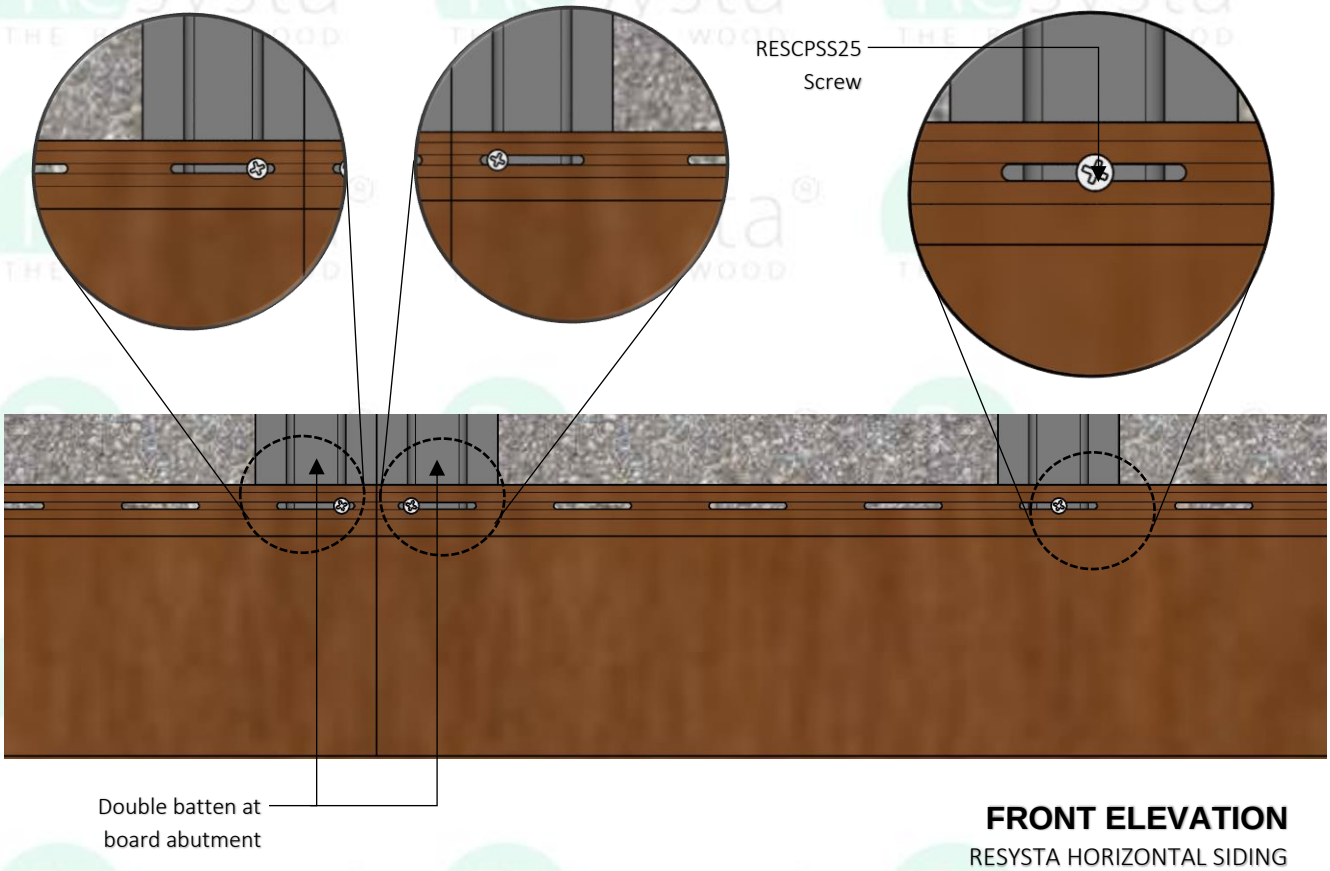

FRONT ELEVATION
RESYSTA HORIZONTAL SIDING

STEP 4.1.5

Hook the groove end of the next board onto the tongue of the installed siding board.

STEP 4.1.6

Continue installing siding boards as outlined in Section 4: "2 Board Wide Installation without the H-Channel Trim" until siding is finished.

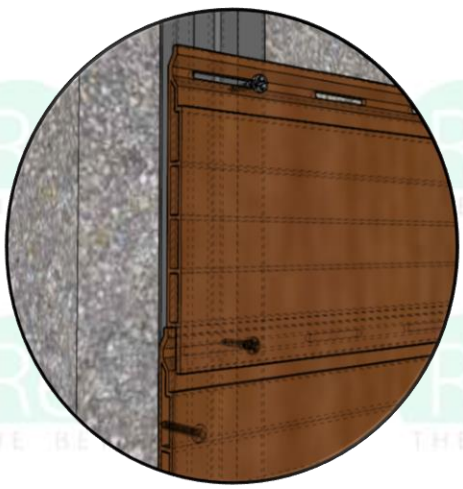

ISOMETRIC DETAIL
RESYSTA HORIZONTAL SIDING

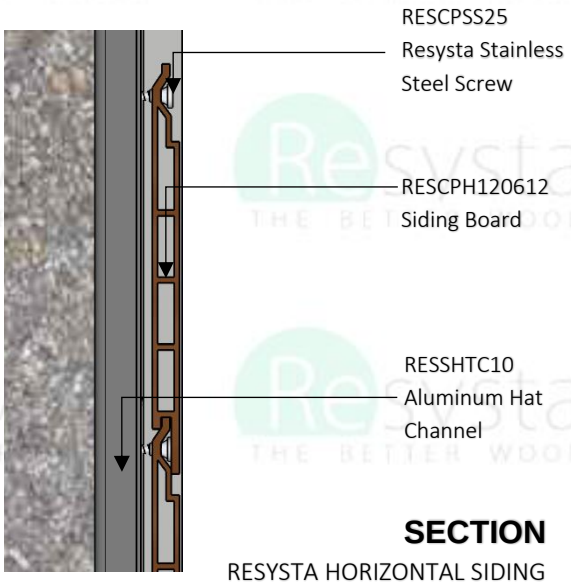

SECTION
RESYSTA HORIZONTAL SIDING

Multi-Board Wide Installation using Continuous H-Channel Trim

STEP 4.2.1

Ensure that two battens have been installed where boards are to be installed end to end.

STEP 4.2.2

Follow Steps 3.1, 3.2, and 3.3 from Section 3 to install finishing trim, starter strip, and hook in the 1st siding board. An H-Channel should be installed at each board abutment joint to cover the ends of the Resysta siding board. This is a option for installations using 3 or more boards abutted end-to-end.

H Mold Profile RESSHM10 Aluminum Trim

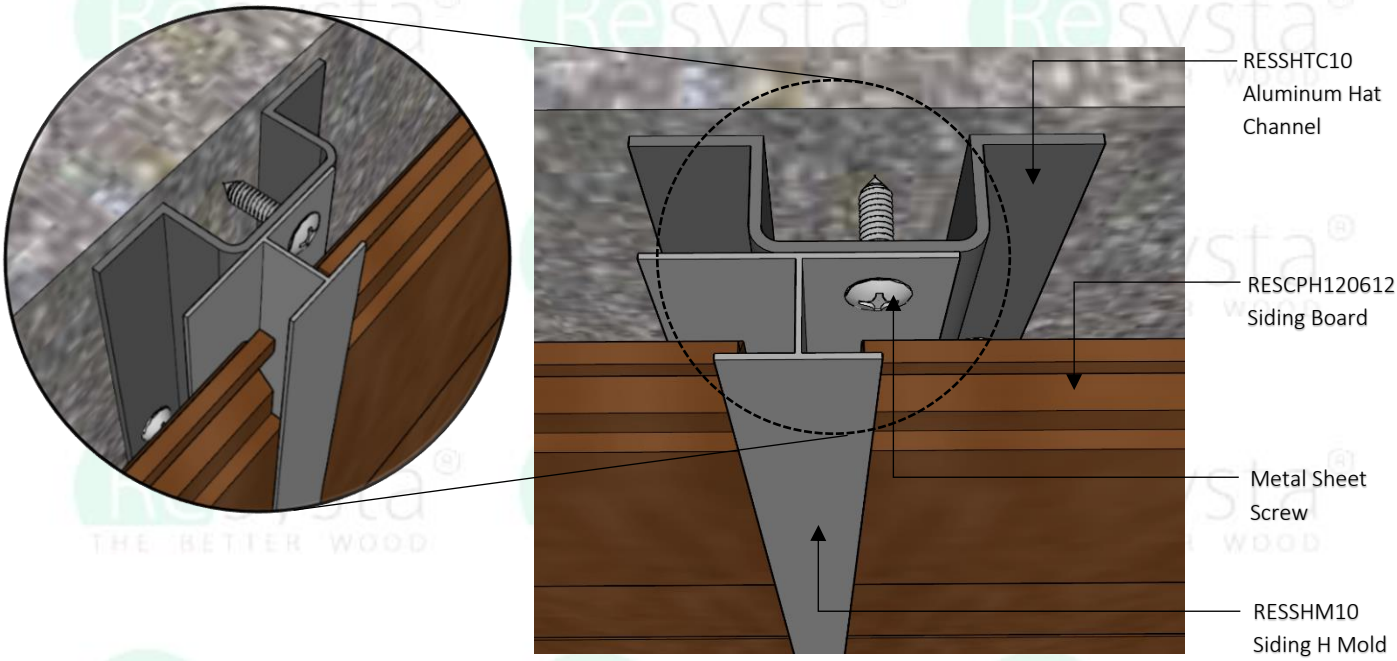

ISOMETRIC VIEW DETAIL
RESYSTA HORIZONTAL SIDING

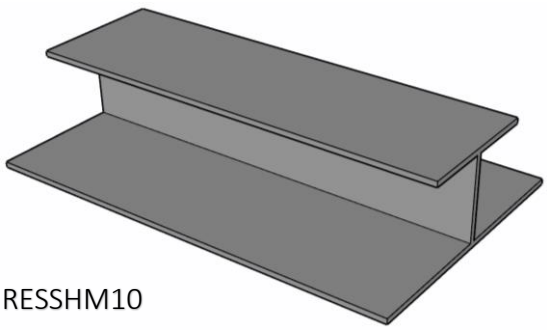

RESSHM10
Siding H Mold

STEP 4.2.3

Install RESCPSS25 screws or #8 screws into all slotted holes except the center hole. DO NOT over tighten the screws. The screws should be placed in the center of the slotted hole and loose enough to allow the board to move freely from side to side to allow for expansion and contraction.

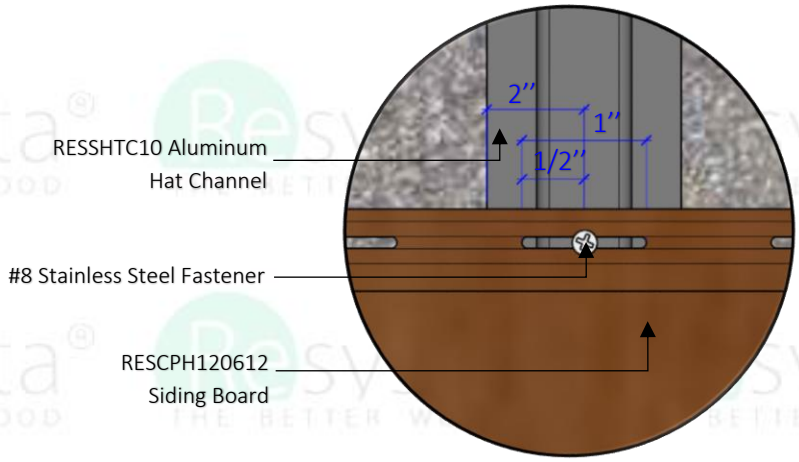

ISOMETRIC DETAIL
RESYSTA HORIZONTAL SIDING

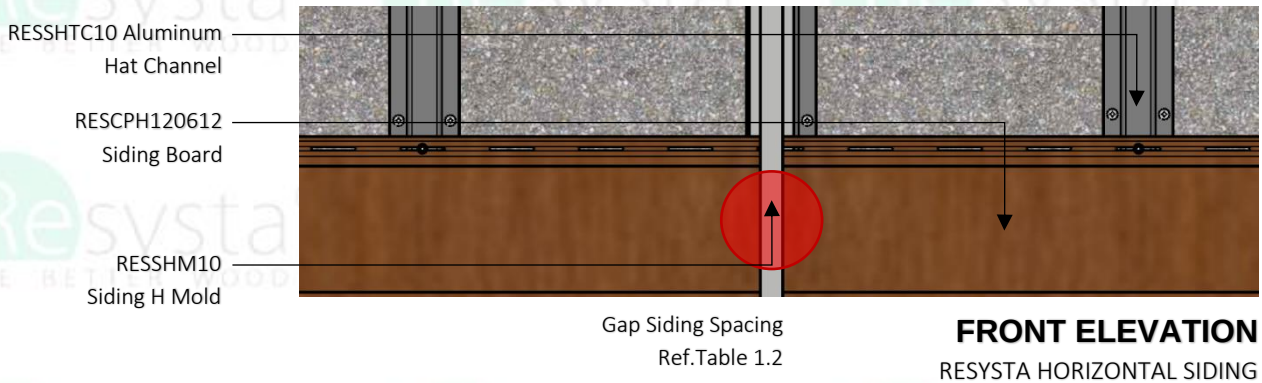

FRONT ELEVATION
RESYSTA HORIZONTAL SIDING

STEP 4.2.4

Install the final two RESCPSS25 screws closest to the ends in the slotted hole in the center of the board. This will allow for expansion and contraction evenly to each side of the assembly.

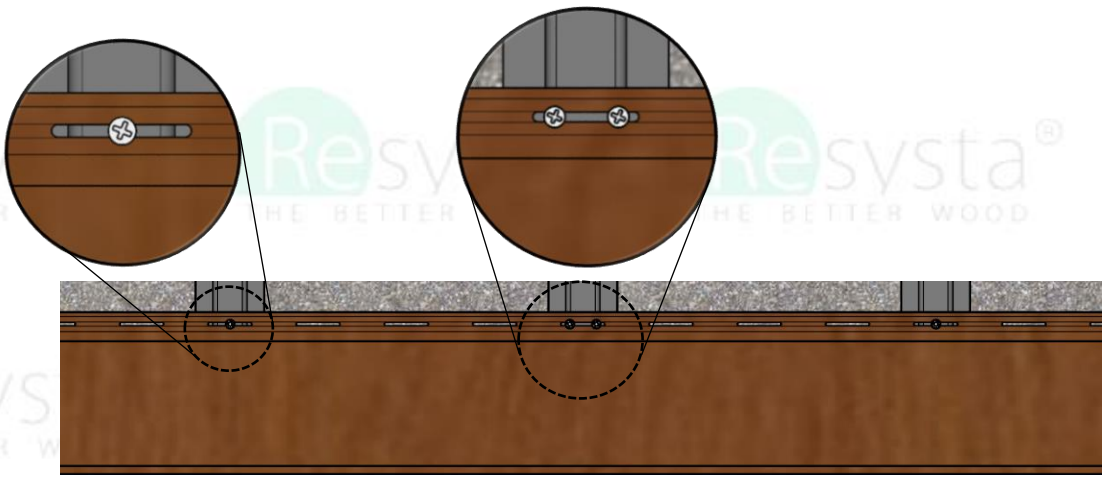

FRONT ELEVATION
RESYSTA HORIZONTAL SIDING

STEP 4.2.5

Hook the groove end of the next board onto the tongue of the installed siding board.

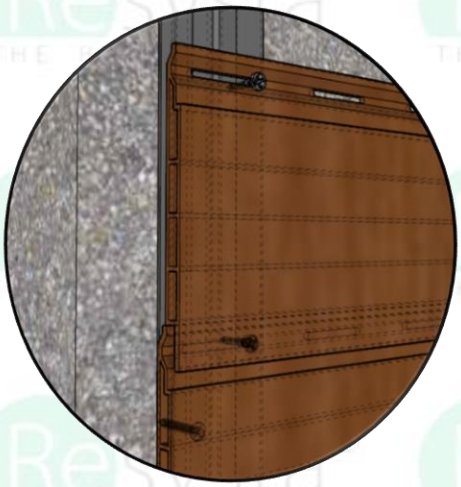

ISOMETRIC DETAIL
RESYSTA HORIZONTAL SIDING

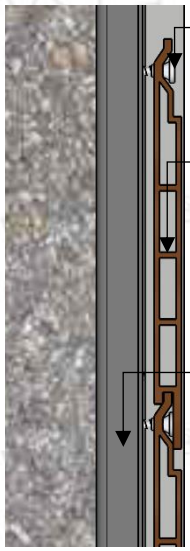

SECTION
RESYSTA HORIZONTAL SIDING

STEP 4.2.6

Continue installing siding boards as outlined in Section 4: "Multi-Board Wide Installation using the H-Channel Trim" until siding is finished.

SECTION 5 – Vertical Siding Applications

STEP 5.1

Pre apply all finishing trim accessories such as trim around corners, windows, and doors according to the pre plan layout and following the manufacture's recommendations. Ensure that all trim is level and square. Battens should be installed horizontally.

STEP 5.2

A starter strip is required to install the Resysta siding board. Attach the starter strip vertically at one end of the batten substructure following the fastener and spacing recommendations in Section 2. The Resysta siding boards will hang ½" beyond the starter strip therefore the starter strip should be attach accordingly per the pre plan layout. If the siding is starting in a corner the corner attachment and the starter strip should be attached at the same time.

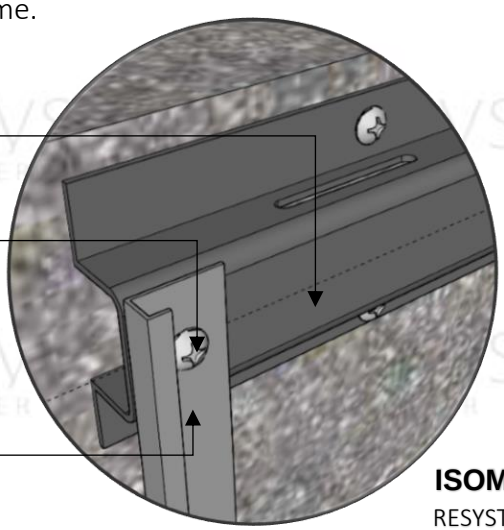

ISOMETRIC DETAIL
RESYSTA VERTICAL SIDING

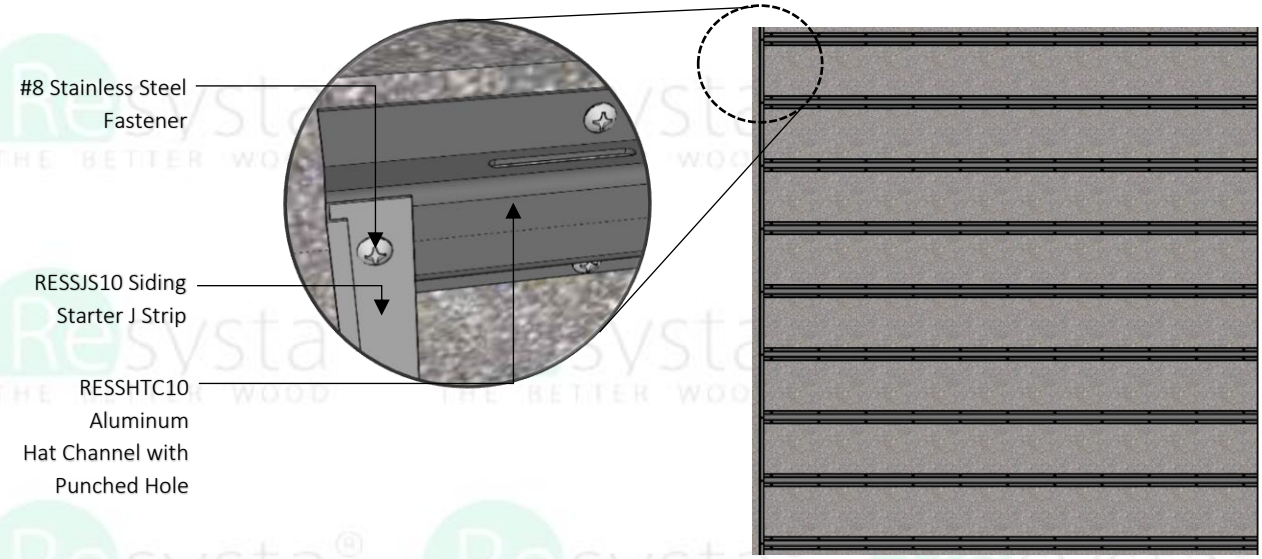

FRONT ELEVATION
RESYSTA VERTICAL SIDING

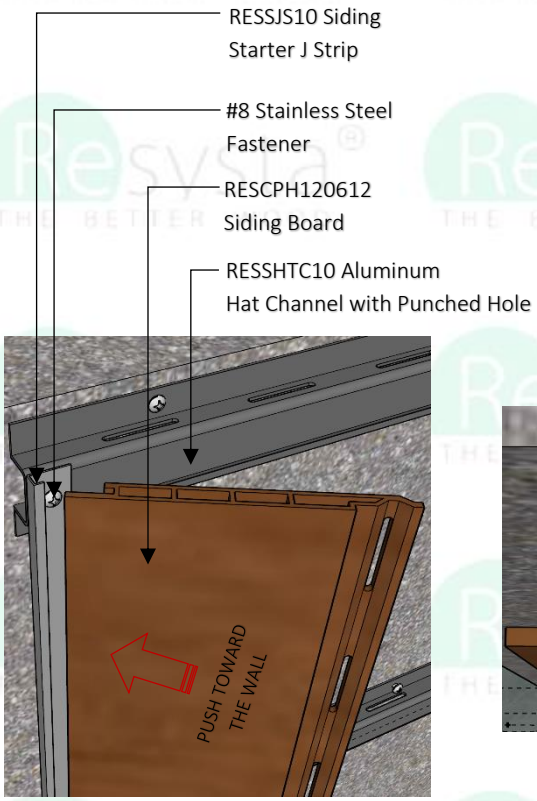

FRONT ELEVATION
RESYSTA VERTICAL SIDING

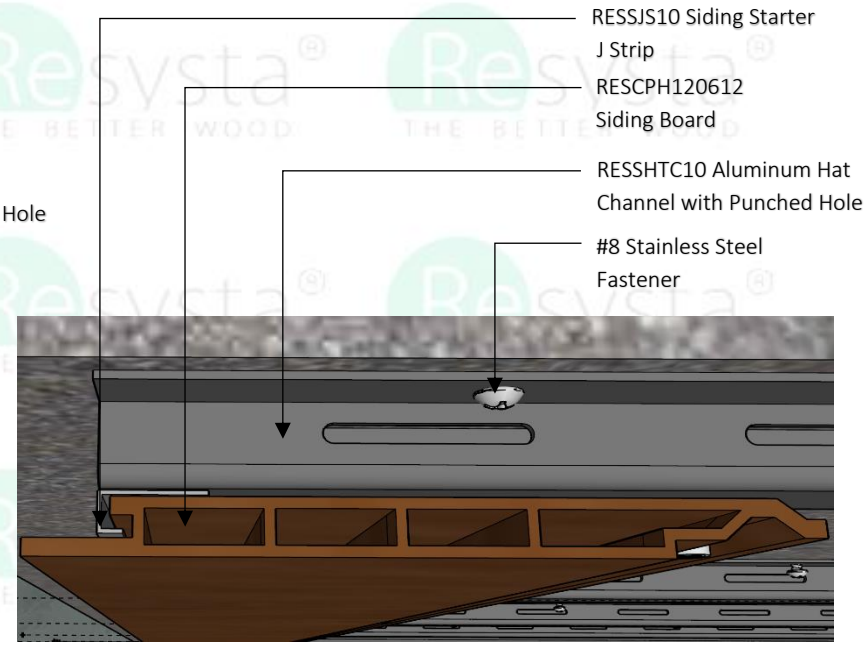

TOP VIEW
RESYSTA VERTICAL SIDING

STEP 5.3

Hook the groove end of the first siding board into the starter strip.

STEP 5.4

Install RESCPSS25 screw or a #8 screw into the slotted hole at the top of the siding board. DO NOT over tighten this screw. This screw should be placed at the top of the slotted hole and loose enough to allow the board to move freely in the vertical direction allowing for expansion and contraction.

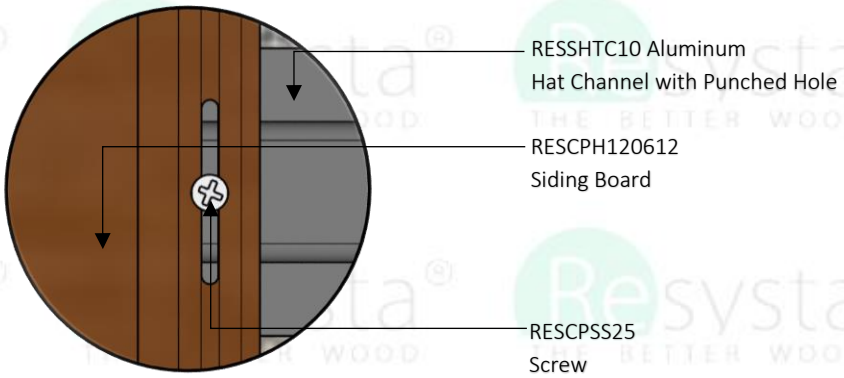

ISOMETRIC DETAIL
RESYSTA VERTICAL SIDING

STEP 5.5

Install RESCPSS25 screws or #8 screws into the remaining slotted holes. DO NOT over tighten the screws. These screws should be placed in the center of the slotted hole and loose enough to allow the board to move freely in the vertical direction allowing for expansion and contraction.

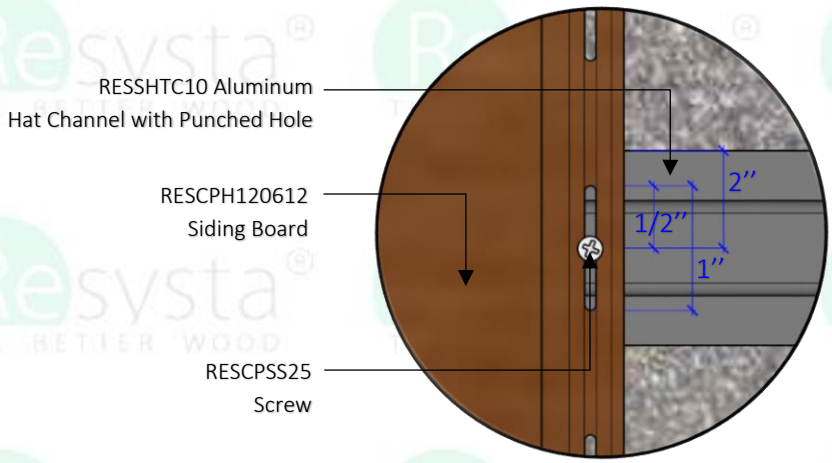

ISOMETRIC DETAIL
RESYSTA VERTICAL SIDING

Special Requirement

By following these installation guides for vertical installation methods ALL expansion and contraction will happen at the bottom of the board. Gap the bottom of the board properly based on installation needs.

Note

If installing more than one board in height, please refer to Section 6 – Vertical Multi Board Siding Applications

STEP 5.6

Hook the groove end of the next board onto the tongue of the installed siding board.

STEP 5.7

Continue installing siding boards as outlined in Section 5 until siding is finished.

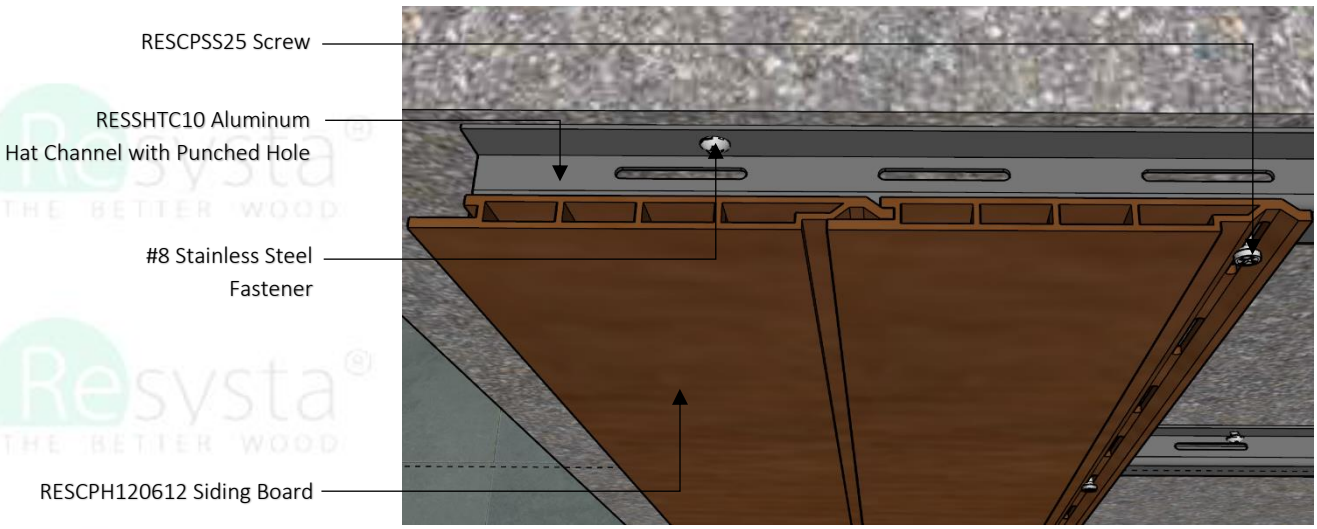

TOP VIEW

RESYSTA VERTICAL SIDING

SECTION 6 – Multi-Board Vertical Siding Applications

2 Board High Installation without the H-Channel Trim (24ft max Height)

STEP 6.1.1

Ensure that two battens have been installed where boards are to be installed end to end.

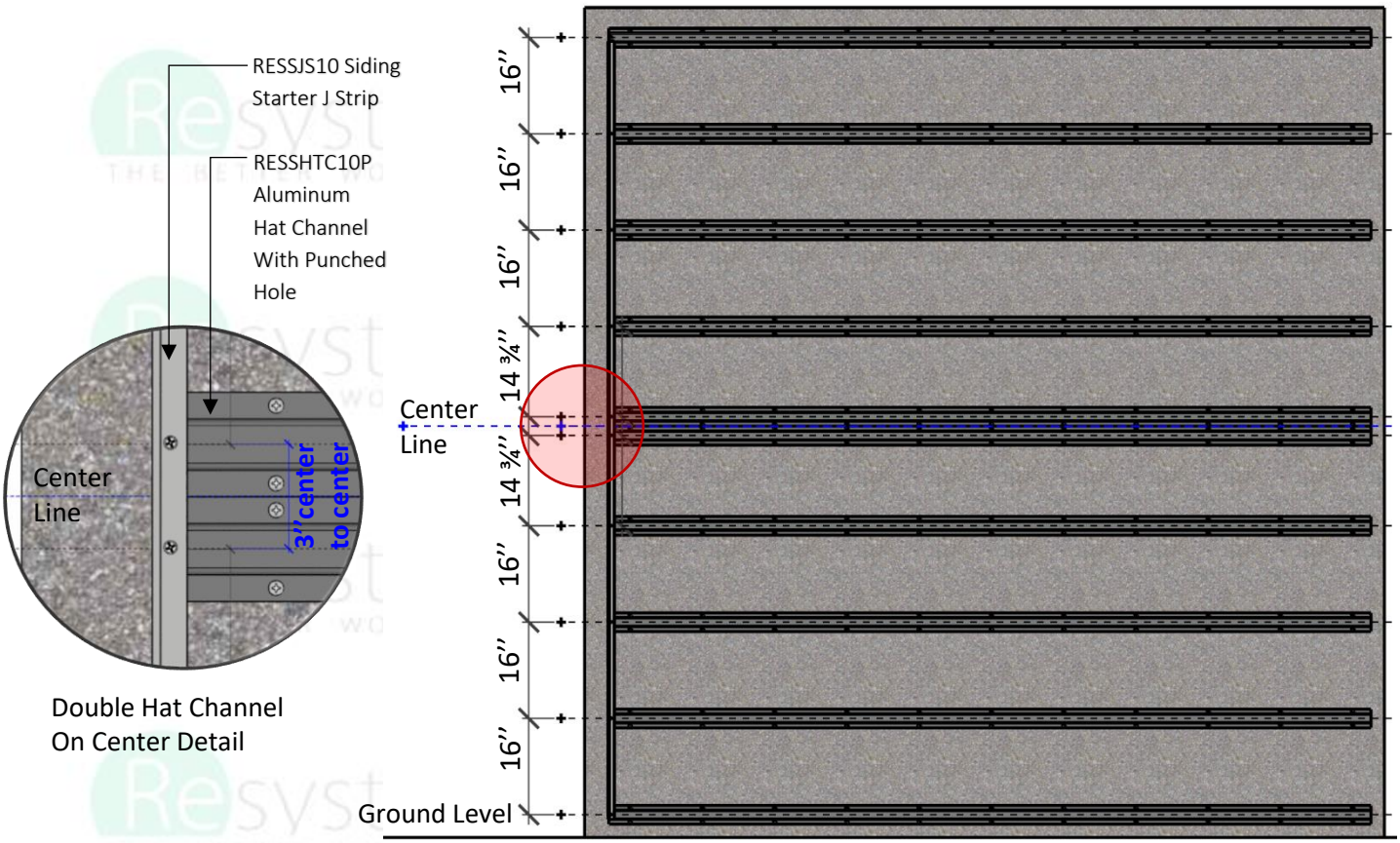

FRONT ELEVATION

RESYSTA VERTICAL SIDING

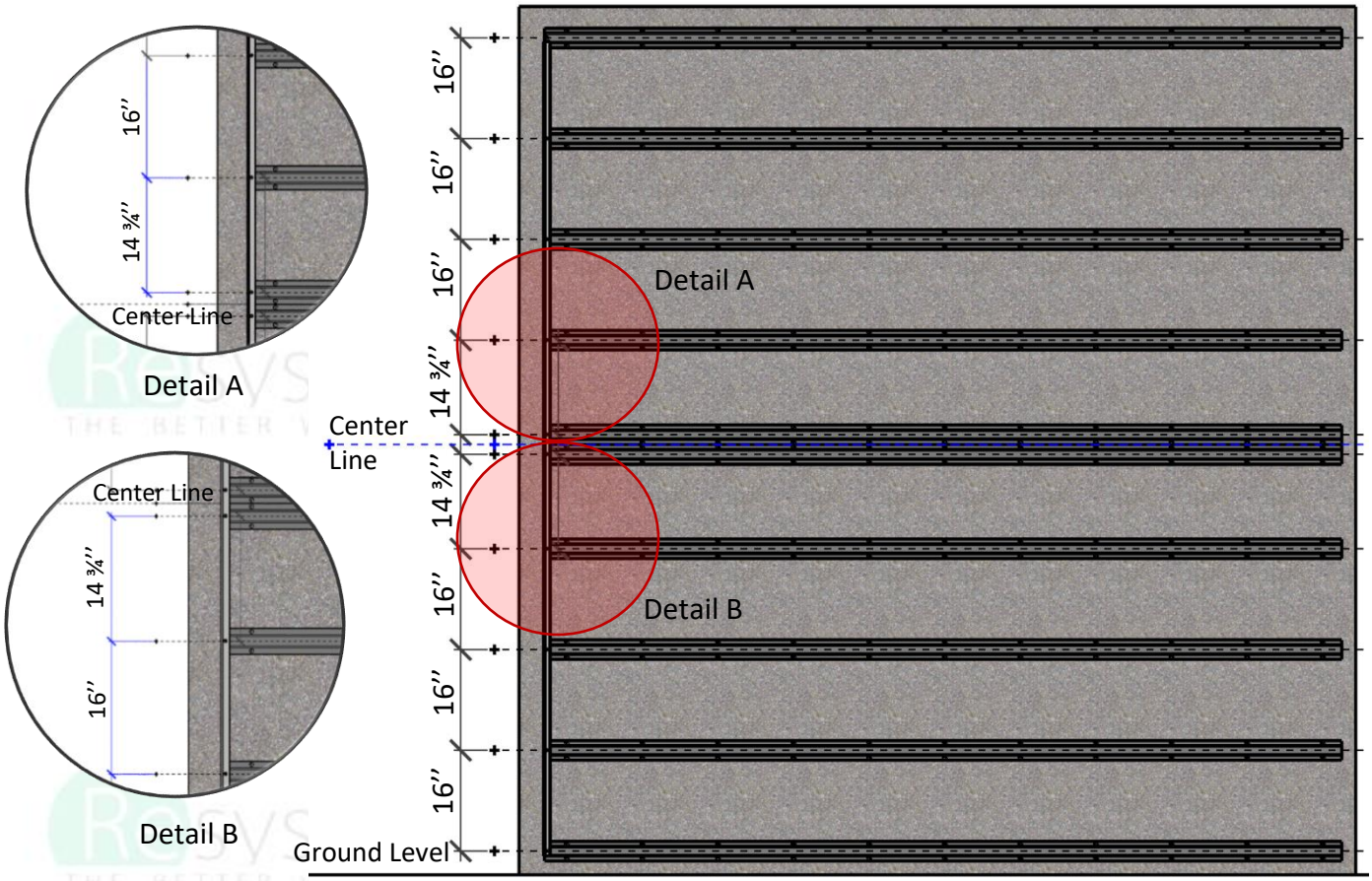

FRONT ELEVATION
RESYSTA VERTICAL SIDING

STEP 6.1.2

Follow Steps 5.1, 5.2, and 5.3 from Section 5 to install finishing trim, starter strip, and hook in the 1st siding board.

STEP 6.1.3

Install the bottom siding board first using RESCPSS25 screw or a #8 screw into the slotted hole at the top of the siding board. This screw should be placed at the top of the slotted hole and snug to the siding board to allow the board to move freely in the vertical direction allowing for expansion and contraction.

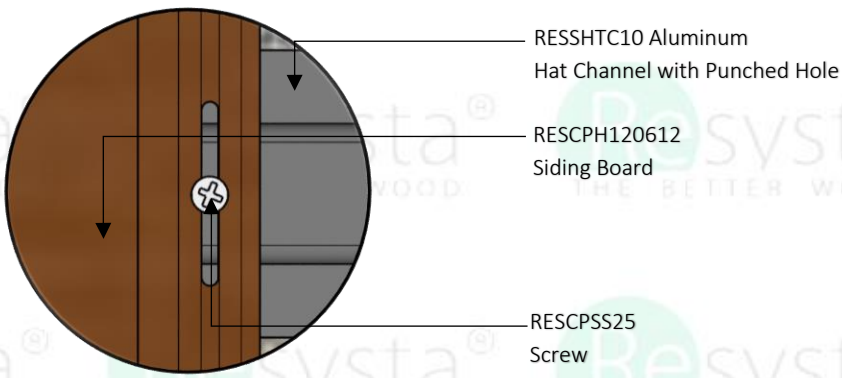

ISOMETRIC DETAIL
RESYSTA VERTICAL SIDING

STEP 6.1.4

Install RESCPSS25 screws into the remaining slotted holes for the bottom siding board. DO NOT over tighten the screws. These screws should be placed in the center of the slotted hole and loose enough to allow the board to move freely in the vertical direction allowing for expansion and contraction.

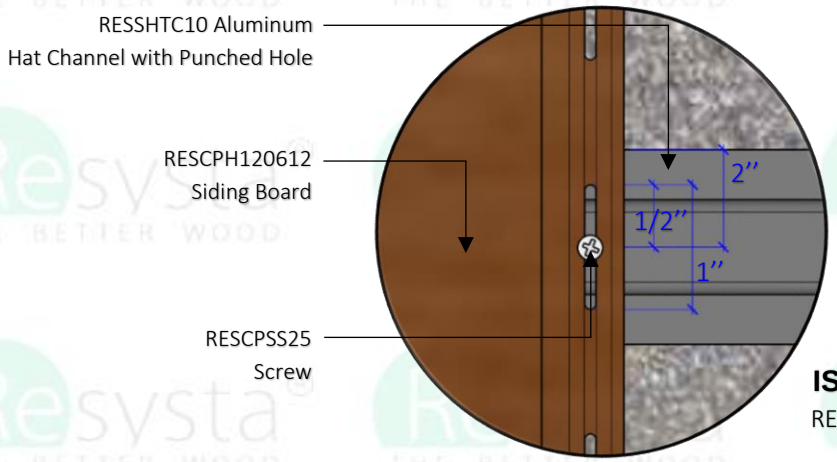

ISOMETRIC DETAIL
RESYSTA VERTICAL SIDING

STEP 6.1.5

Install the top siding board by butting it against the bottom siding board and securing RESCPSS25 screw into the slotted hole at the bottom of the siding board. This screw should be placed at the top of the slotted hole and snug to the siding board to allow the board to move freely in the vertical direction allowing for expansion and contraction.

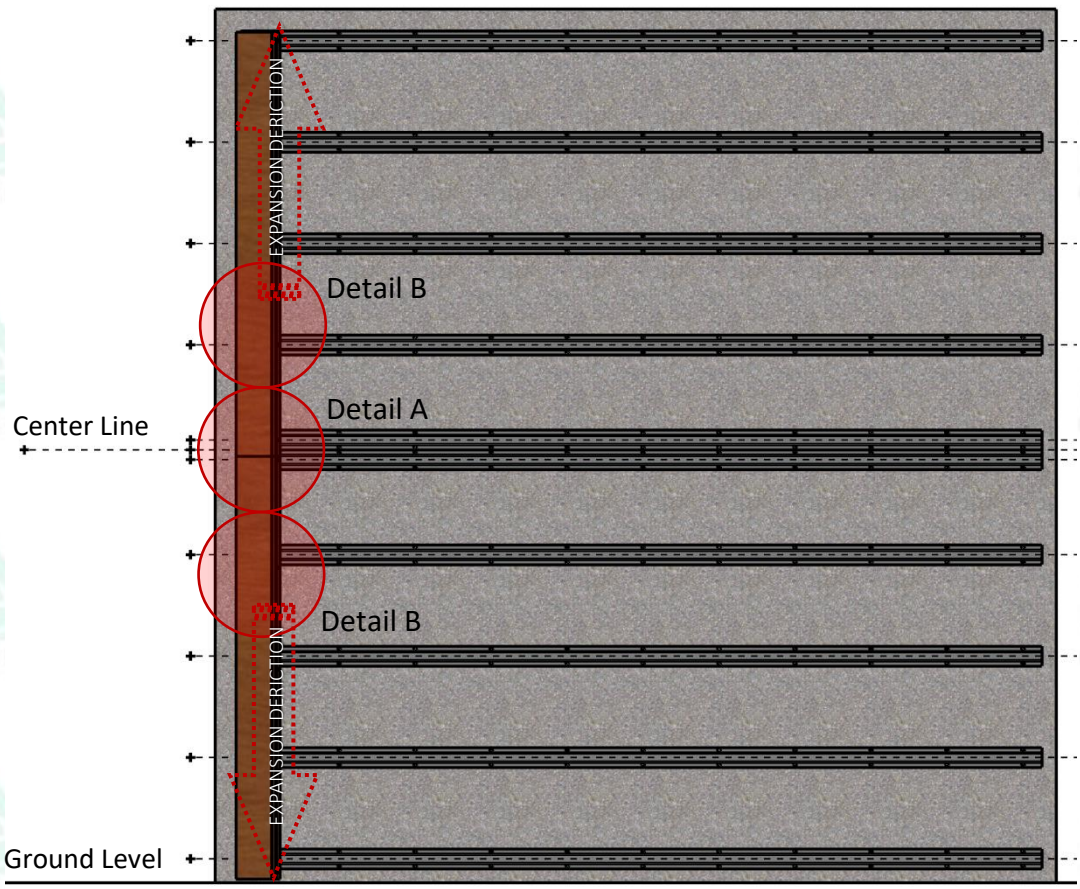

FRONT ELEVATION
RESYSTA VERTICAL SIDING

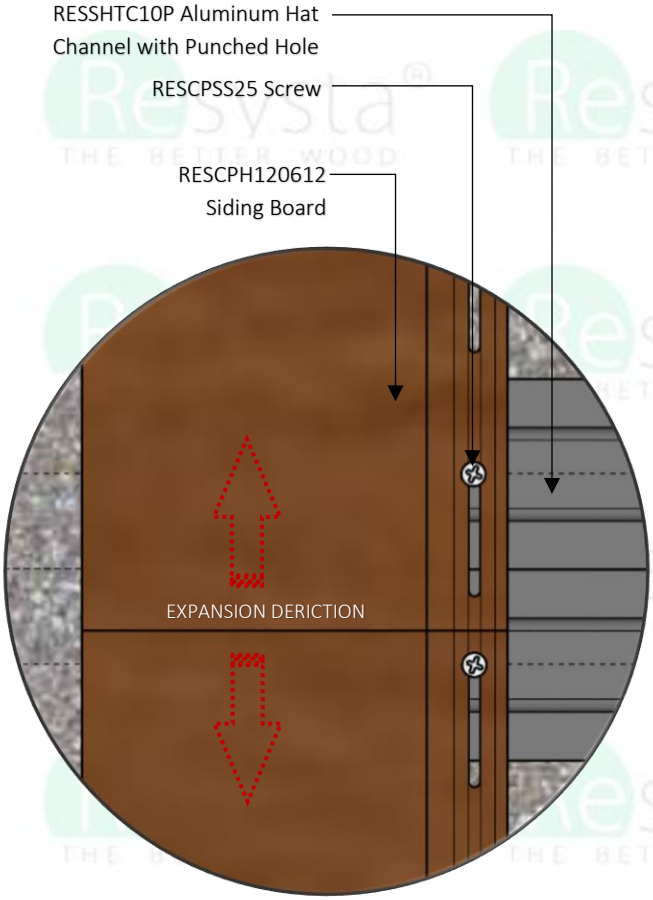

Detail A

Hard fasten the screw in the center of the Hat Channel but on the top most part of the Siding boards slotted

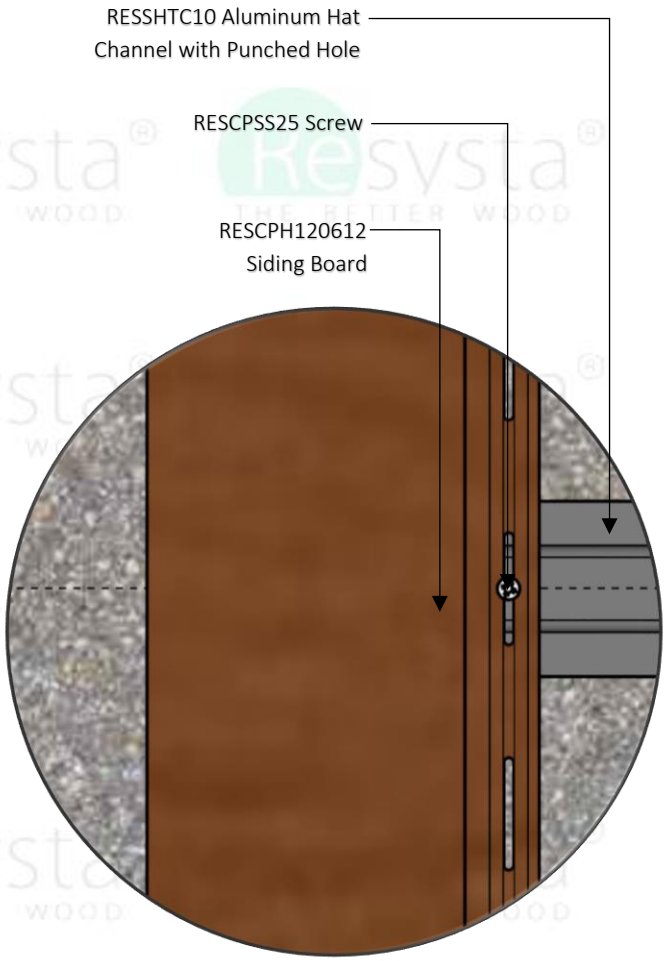

Detail B

Loose fasten the screw in the center of the Hat Channel and Siding boards slotted hole.

STEP 6.1.6

Install RESCPSS25 screws into the remaining slotted holes for the top siding board. DO NOT over tighten the screws. These screws should be placed in the center of the slotted hole and loose enough to allow the board to move freely in the vertical direction allowing for expansion and contraction.

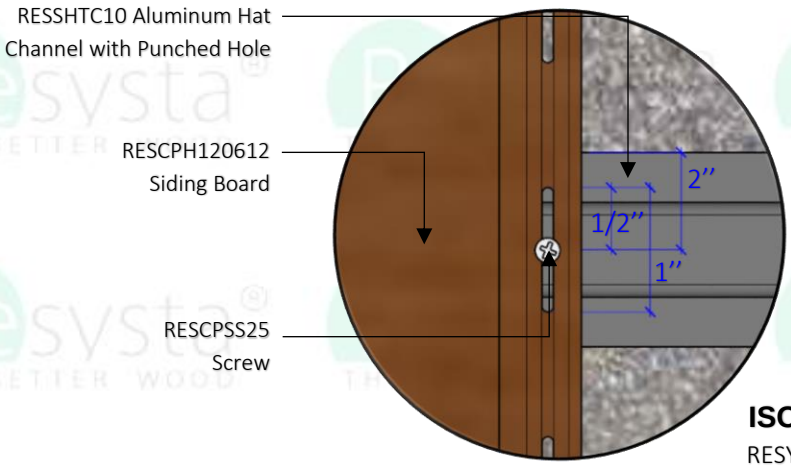

ISOMETRIC DETAIL

RESYSTA VERTICAL SIDING

STEP 6.1.7

Hook the groove end of the next board onto the tongue of the installed siding.

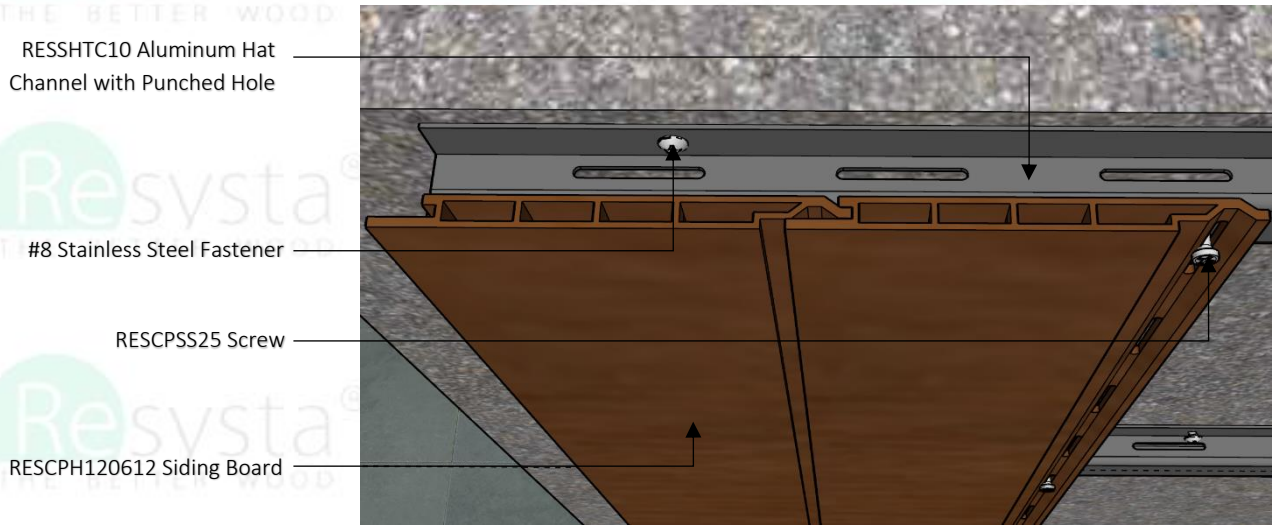

TOP VIEW

RESYSTA VERTICAL SIDING

STEP 6.1.8

Continue installing siding boards as outlined in Section 6: "2 Board High Installation without the H-Channel Trim" until siding is finished.

Multi-Board High Installation using the Continuous H-Channel Trim

STEP 6.2.1

Ensure that two battens have been installed where boards are to be installed end to end.

STEP 6.2.2

Follow Steps 5.1, 5.2, and 5.3 from Section 5 to install finishing trim, starter strip, and hook in the 1st siding board. An H-Channel should be installed at each board abutment joint to cover the ends of the Resysta siding board. This is an option for installations using 3 or more boards abutted end-to-end. None of Siding Trim should be installed horizontally unless weep holes are drilled at 8" intervals to allow for moisture to escape from behind the face flange.

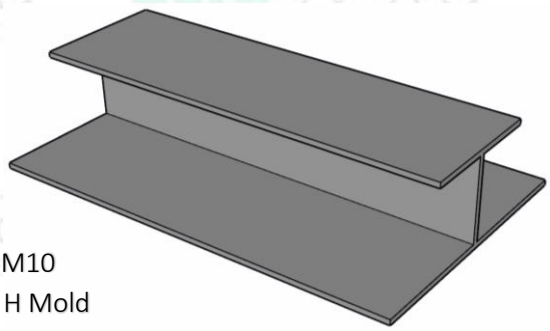

RESSHM10
Siding H Mold

STEP 6.2.3

Install RESCPSS25 screw into the slotted hole at the top of the siding board. DO NOT over tighten this screw. This screw should be placed at the top of the slotted hole and loose enough to allow the board to move freely in the vertical direction allowing for expansion and contraction.

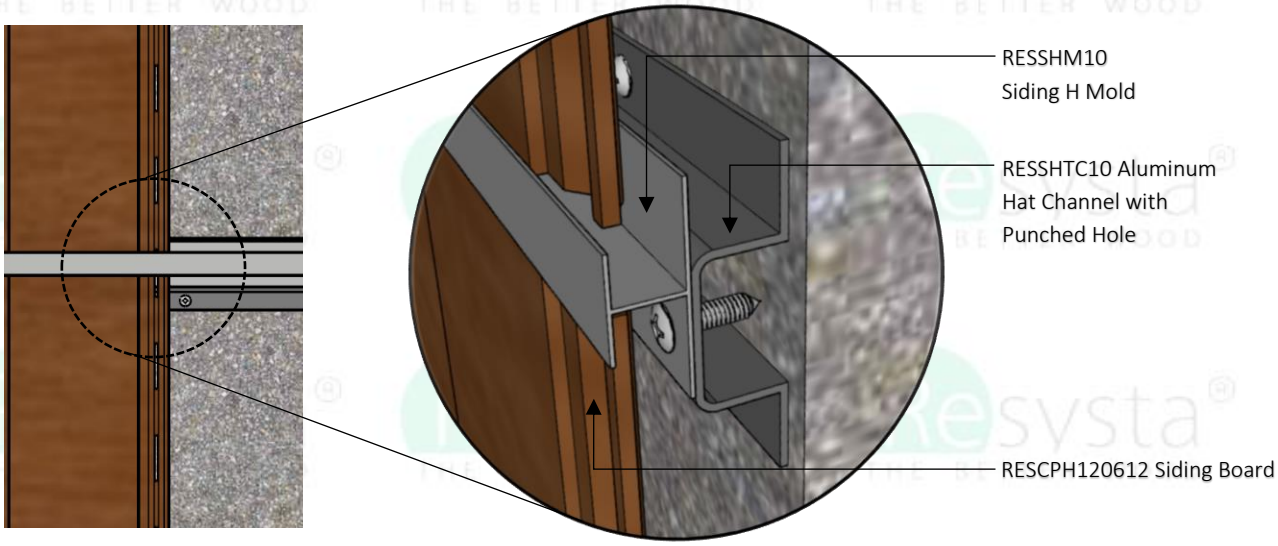

FRONT ELEVATION
RESYSTA VERTICAL SIDING

STEP 6.2.4

Install RESCPSS25 screws into the remaining slotted holes. DO NOT over tighten the screws. These screws should be placed in the center of the slotted hole and loose enough to allow the board to move freely in the vertical direction allowing for expansion and contraction.

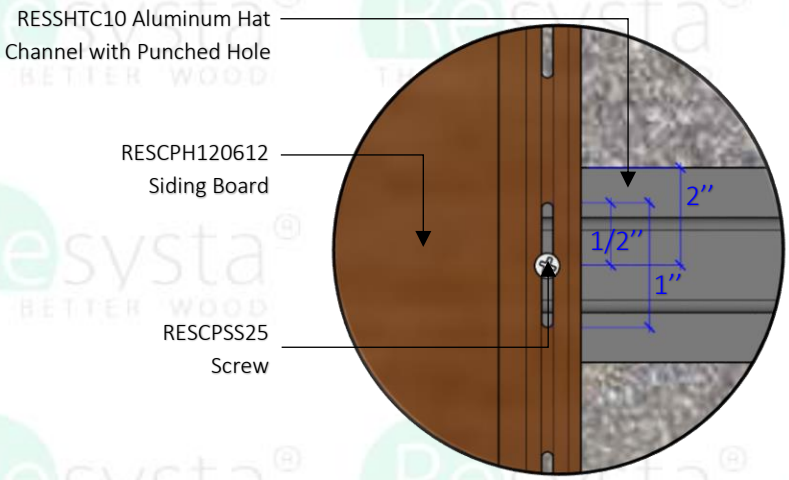

ISOMETRIC DETAIL
RESYSTA VERTICAL SIDING

STEP 6.2.5

Hook the groove end of the next board onto the tongue of the installed siding board. Proper gapping between the siding boards and H-Channel is necessary.

SECTION 7 – Air Barrier – Requirements

For all of the installation options it is crucial to allow the uninterrupted flow of air from the bottom to the top of the wall system. This creates a chimney effect which provides not only moisture wicking but also cooling behind the Resysta siding.

Air flow must be able to release at the top of the construction. For that reason a ½" gap between the top of the Resysta siding board and the Parapet Wall Cap Flashing is necessary. The same size gap is needed between the face of the Resysta siding board and the Parapet Wall Cap Flashing. This should also be followed when using the J channel at the top of the wall.

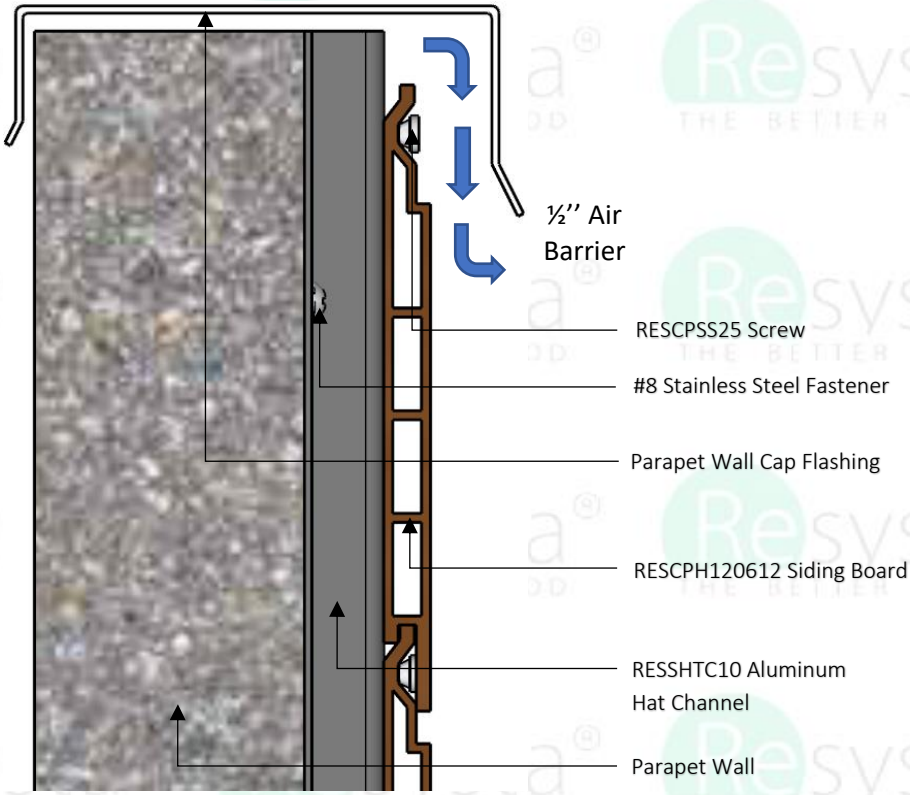

SIDE ELEVATION

SECTION 8 – Finishing Trim

HORIZONTAL OUTSIDE CORNERS

Outside corner trim should be pre applied prior to installing siding boards. The starter strip for the first board should be installed butted against the corner trim, not overlapping the corner trim attachment flange. The siding board end that is inserted into the outside corner should be miter cut at a 45 degree angle to match up with the outside corner internal web. Follow the gap guide when installing the siding board to allow for expansion and contraction within the outside corner trim. Install horizontal siding per previous sections. When using aluminum hat channel for outside corner application, installer may reverse and attaché hat channel so that the flanges meet.

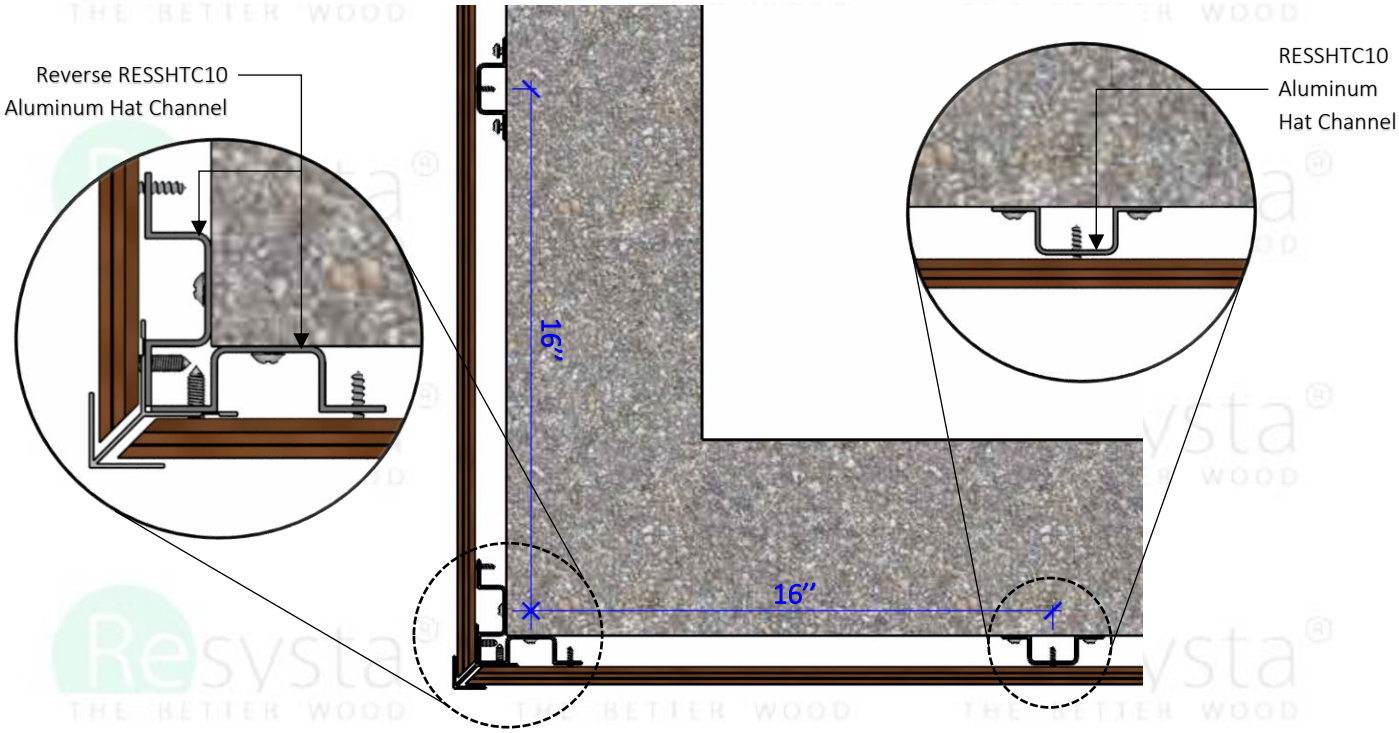

TOP VIEW
EXTERNAL CORNER PROFILE

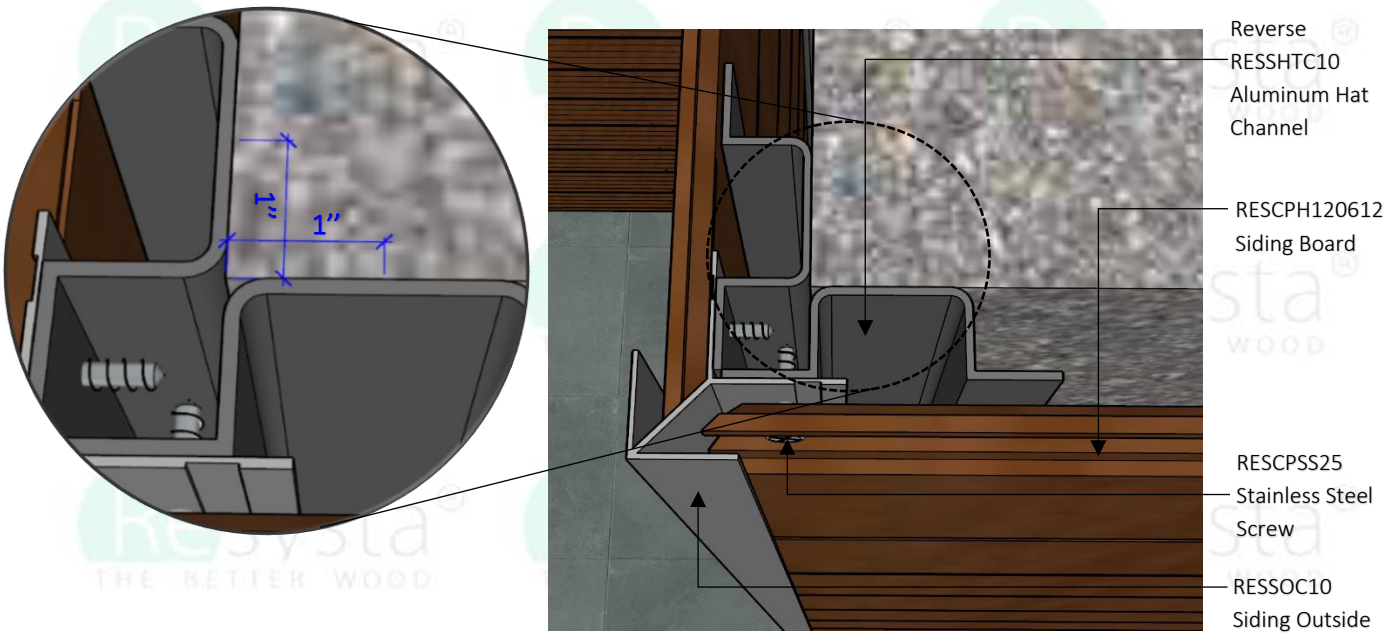

ISOMETRIC VIEW DETAIL
EXTERNAL CORNER PROFILE

HORIZONTAL INSIDE CORNERS

Inside corner trim should be pre-applied prior to installing siding boards. The starter strip for the first board should be installed butted against the corner trim, not overlapping the corner trim attachment flange. Follow the gap guide when installing the siding board to allow for expansion and contraction within the inside corner trim. Install horizontal siding per previous sections.

Note

The corners of the Resysta siding inside of the trim need to be mitered. This gives more room for expansion inside of the trim and leaves more of the face of the siding when it contracts.

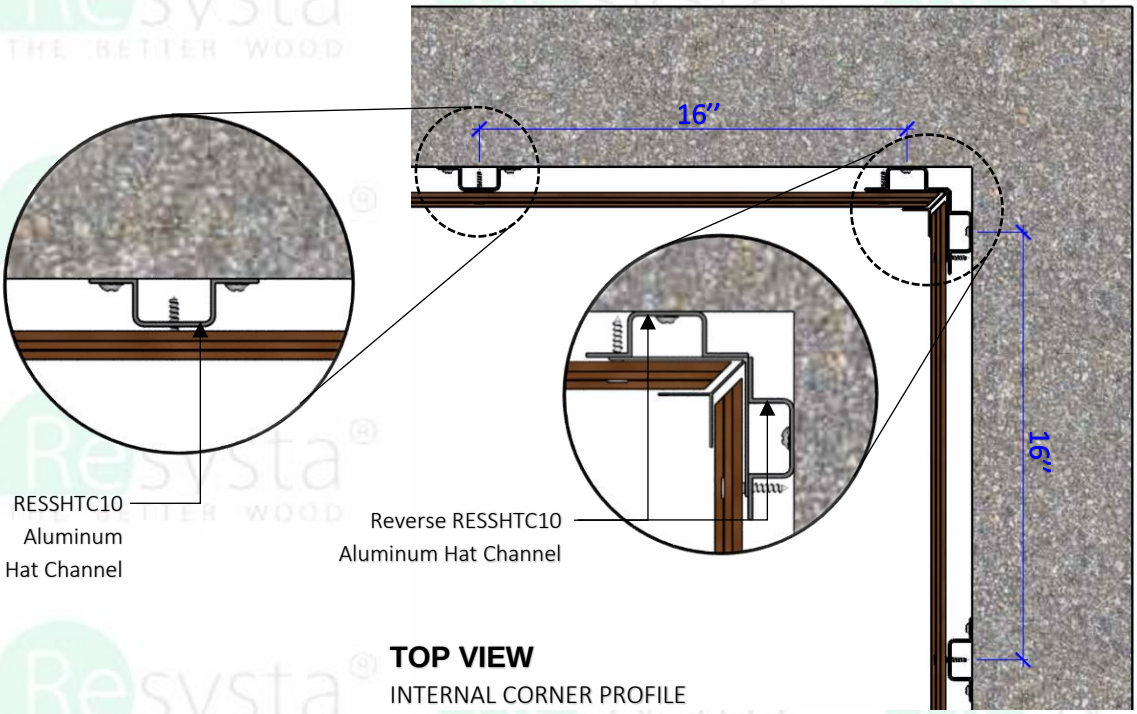

TOP VIEW

INTERNAL CORNER PROFILE

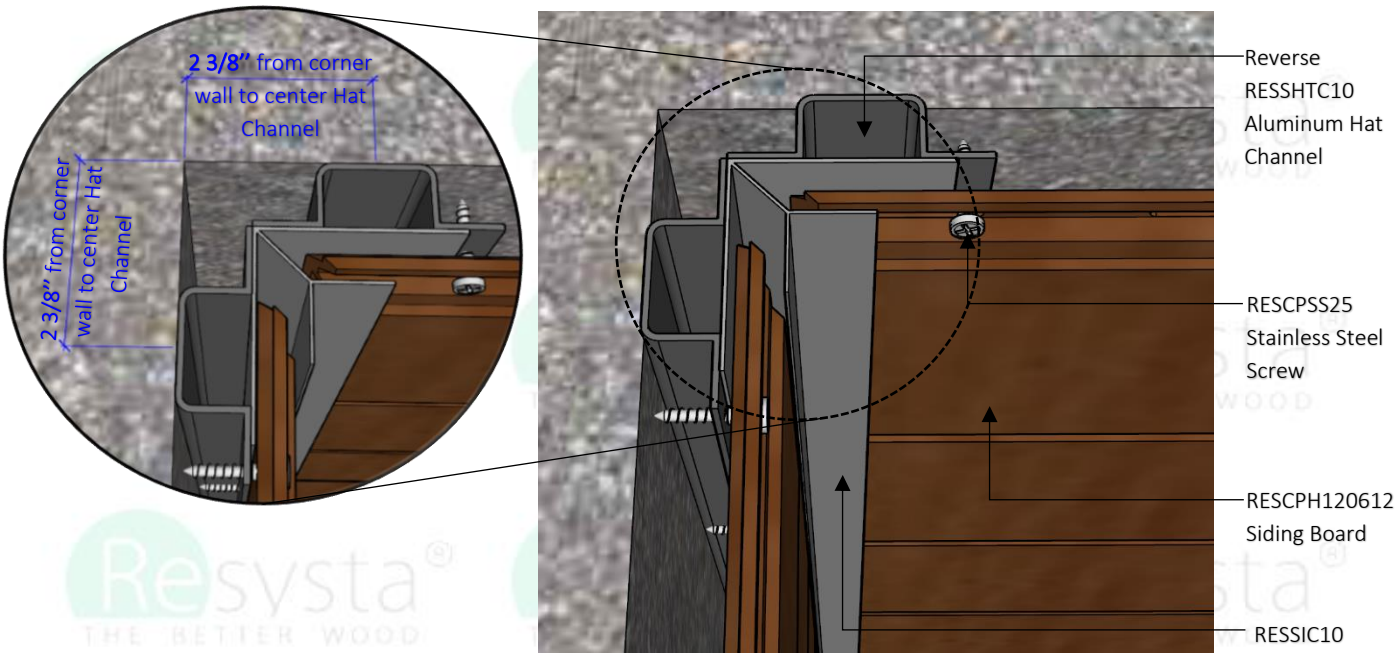

ISOMETRIC VIEW DETAIL

INTERNAL CORNER PROFILE

BOARD TERMINATION TRIM

When a siding board in either a horizontal or vertical application terminates into a wall, eave, window, door etc. a J-channel should be used to cover the exposed end of the siding board. The J-channel should also be used along the bottom of a vertical installation. J-channel trim should be pre-applied prior to installing siding boards. In the case of an intersecting joint the starter strip should be installed butted against the J-channel trim, not overlapping the J-channel trim attachment flange. Follow the gap guide when installing the siding board to allow for expansion and contraction within the J-channel trim.

HORIZONTAL APPLICATION

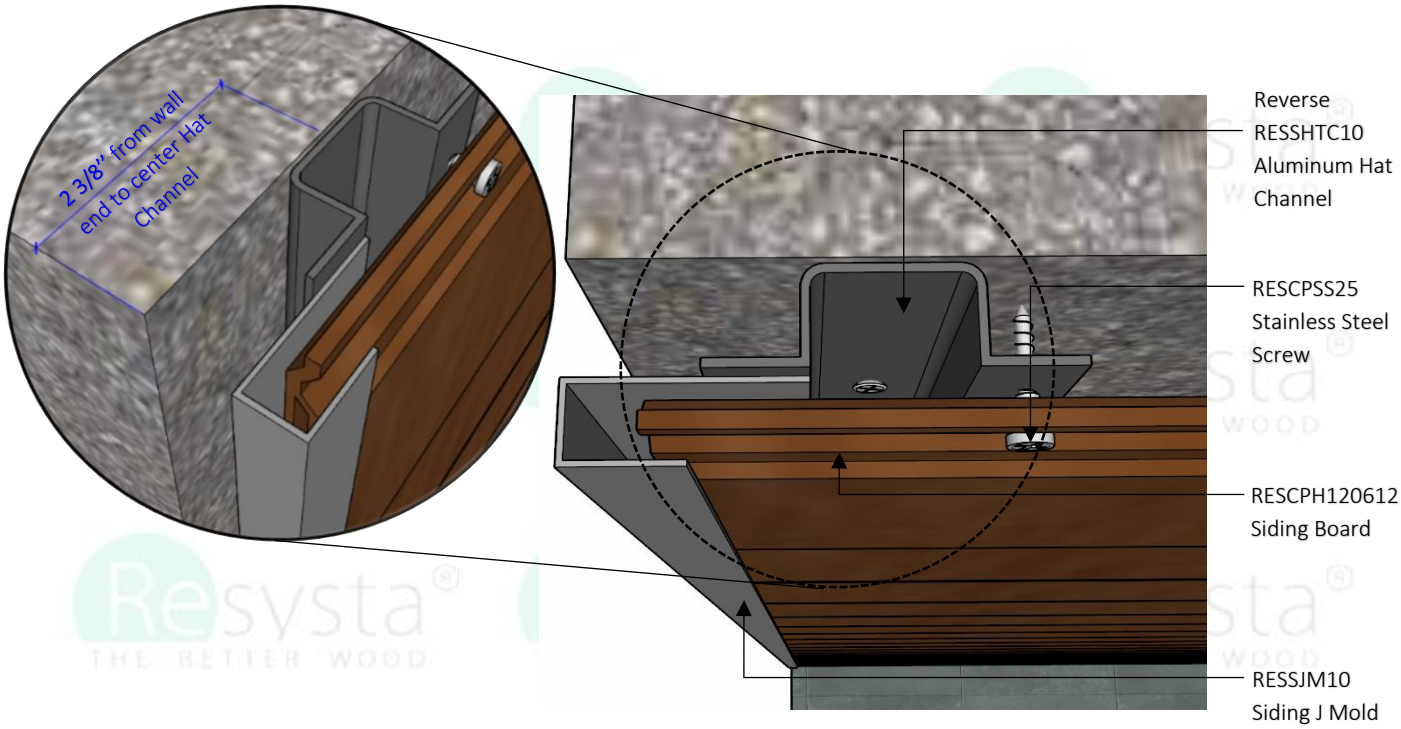

ISOMETRIC VIEW DETAIL
SIDING J MOLD

VERTICAL APPLICATION

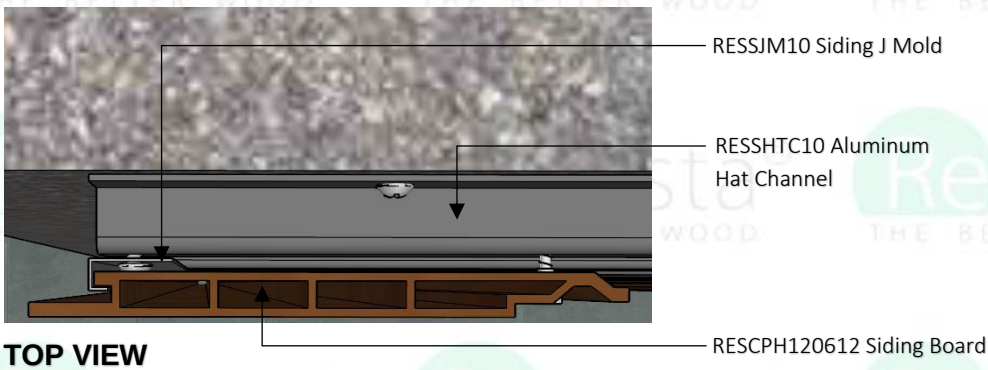

TOP VIEW
SIDING J MOLD

Requirement

When the J-Channel is installed in a horizontal position weep holes must be drilled at 8" intervals to allow for moisture to escape from behind the face flange. Do not drill weep holes over a door or window installation.

Pinning is a way to control the direction of expansion of the Resysta Siding board, each board needs to be fixed at one end of the board.

Option 01 Every board should hard pin on one end of Resysta Siding board to allow one side expansion direction.

Pinning the RESCPSS25 Stainless Steel Screw at the first hole of the

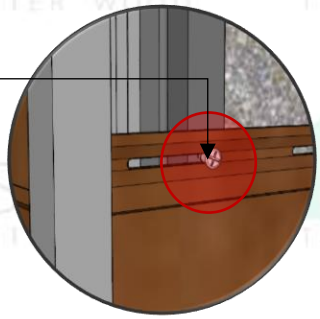

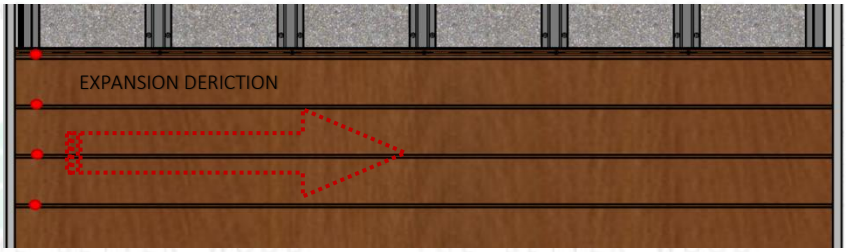

PINNING LOCATION
OPTION 01 AT ONE END

Option 02 *Every board should hard pin on the middle of the Resysta Siding board allow for right or left side expansion direction.*

Pinning the RESCPSS25 Stainless Steel Screw at the middle hole of Resysta Siding board.

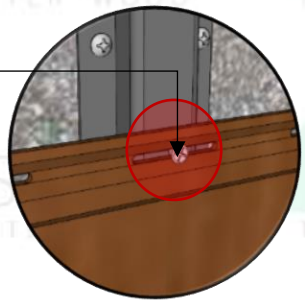

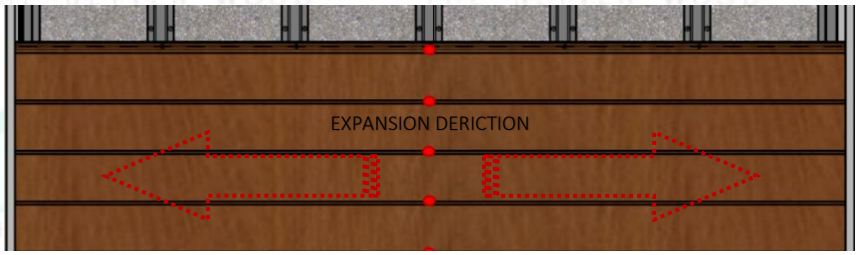

PINNING LOCATION
OPTION 02 AT THE MIDDLE

SECTION 9 – Primer and Sealer System

Resysta recommends using approved water based primer RBP and stain RCL system.

Safety Warning

Resysta® Products do not present an inhalation, ingestion, or contact health hazard unless subjected to operations such as sawing, sanding, or machining which result in the generation of airborne particulate. This product contains crystalline silica. Respirable crystalline silica limits are specified by OSHA. Exposure to respirable (fine) silica dust depends on a variety of factors, including activity rate (e.g. cutting rate), method of handling, ventilation, environmental conditions (e.g. weather conditions, workstation orientation), and engineering control measures used. Exposures to respirable crystalline silica above limits established by OSHA are not expected during the normal use of this product. Crystalline silica, has been shown to cause silicosis, and has been identified by the State of California, IARC and NTP as a known human carcinogen. The risk of developing silicosis is dependent upon the exposure intensity and duration. It is recommended that a NIOSH approved particulate respirator be worn whenever working with this product results in airborne dust exposure.

Please direct product inquiries to:

Resysta North America, Inc.
4035 Cheyenne Ct.
Chino, CA. 91710
Tel: 909-393-2888
Email: info@resystausa.com