SOLATUBE INTERNATIONAL

IMPACT AND NON-IMPACT 290 DS LOW PROFILE TUBULAR DAYLIGHT DEVICE

INSTALLATION ANCHORAGE DETAILS

GENERAL NOTES:

1. THE PRODUCT SHOWN HEREIN IS DESIGNED TO COMPLY WITH THE CURRENT EDITION OF THE FLORIDA BUILDING CODE (FBC) REQUIREMENTS, INCLUDING AND EXCLUDING THE HIGH VELOCITY HURRICANE ZONE (HVHZ) AT THE DESIGN PRESSURES STATED HEREIN AS FOLLOWS.
   - 1.1. LIMITS OF USE FOR 290 DS LOW PROFILE TUBULAR DAYLIGHT DEVICE:
     - 1.1.1. FL32178.1, IMPACT RESISTANT AND APPROVED FOR USE IN AND OUTSIDE THE HVHZ.
     - 1.1.2. FL32178.2, IMPACT RESISTANT AND APPROVED FOR USE OUTSIDE THE HVHZ ONLY.
     - 1.1.3. FL32178.3, NON- IMPACT RESISTANT AND APPROVED FOR USE OUTSIDE THE HVHZ ONLY.
   - 1.2. SEE DESIGN PRESSURE RATING TABLE ON SHEET 2 FOR DESIGN PRESSURES AND GLAZING REQUIREMENTS FOR ABOVE.

2. THE PRODUCT DETAILS CONTAINED HEREIN ARE BASED UPON THE FOLLOWING SIGNED AND SEALED TEST REPORTS BY INTERTEK AND ASSOCIATED LABORATORY STAMPED DRAWINGS.
   - 2.1. TEST REPORT NO. SIGNED AND SEALED BY TYLER WESTERLING, FL P.E. NO. 72012.01-303-44, AAMA/WDMA/CSA 101/1.S.2/A440-08.
   - 2.2. TEST REPORT NO. J2410.02-303-44, TAS 201-94, TAS 202-94, TAS 203-94, ASTM E1886-13A AND ASTM E1996-14A, SIGNED AND SEALED BY TYLER WESTERLING, FL P.E. NO. 72012.

3. THE PRODUCT HAS BEEN TESTED TO AAMA/WDMA/CSA 101/1.S.2/A440-08, ASTM E1886-13A AND ASTM E1996-14A AND TAS 201, TAS 202 AND TAS 203.
   - 3.1. THE DESIGN PRESSURES SHOWN IN DESIGN PRESSURE RATING TABLE ON SHEET 2 OF THIS DRAWING ARE BASED ON THE LOWER OF TEST REPORT NO. 72012.01-303-44 AND J2410.02-303-44 RESULTS FOR STATIC TEST RESULTS DIVIDED BY A FACTOR OF SAFETY OF 2 OR CYCLIC LOADING TEST RESULTS.

4. PLASTIC COMPONENTS OF THE SOLATUBE TUBULAR DAYLIGHT DEVICE HAVE BEEN EVALUATED TO THE REQUIREMENTS OF THE CURRENT EDITION OF THE FLORIDA BUILDING CODE INCLUDING THE HIGH VELOCITY ZONE AND ARE IN COMPLIANCE AS DOCUMENTED IN PRODUCT EVALUATION REPORT NO. 2664, BY ROBERT J. AMORUSO, P.E.

5. ADEQUACY OF THE EXISTING STRUCTURAL ROOF SHEATHING AND SUPPORTING 2X FRAMING AS A MAIN WIND FORCE RESISTING SYSTEM CAPABLE OF WITHSTANDING AND TRANSFERRING APPLIED PRODUCT LOADS TO THE FOUNDATION IS THE RESPONSIBILITY OF THE ENGINEER OR ARCHITECT OF RECORD FOR THE PROJECT OF INSTALLATION.

6. THE INSTALLATION DETAILS DESCRIBED HEREIN ARE GENERIC AND MAY NOT REFLECT ACTUAL CONDITIONS FOR A SPECIFIC SITE. IF SITE CONDITIONS CAUSE INSTALLATION TO DEVIATE FROM THE REQUIREMENTS DETAILED HEREIN, A LICENSED ENGINEER OR ARCHITECT SHALL PREPARE SITE SPECIFIC DOCUMENTS FOR USE WITH THIS DOCUMENT.

7. THIS PRODUCT EVALUATION DOCUMENT ADDRESSES THE STRUCTURAL ATTACHMENT OF THE SKYLIGHT/TUBULAR DAYLIGHT DEVICE TO THE ROOF SHEATHING ONLY. PREPARATION OF THE ROOF SHEATHING AND ROOF COVERING(S) TO RECEIVE THE SKYLIGHT/TUBULAR DAYLIGHT DEVICE SHALL BE PER THE MANUFACTURER'S INSTRUCTIONS AND COMPLIANT WITH CHAPTER 15 OF THE CURRENT EDITION OF THE FLORIDA BUILDING CODE AND CHAPTER 9 OF THE CURRENT EDITION OF THE FLORIDA RESIDENTIAL CODE.

8. IN ACCORDANCE WITH THE CURRENT EDITION FBC, DISSIMILAR METALS INCLUDING FASTENERS THAT MAY COME INTO CONTACT WITH ALUMINUM SKYLIGHT FRAMING SHALL HAVE BEEN PROTECTED.

9. GLAZING:
   - 9.1. SEE SHEET 2, GLAZING DETAILS FOR APPROVED GLAZING SELECTIONS.
   - 9.2. GLAZING HAS BEEN REVIEWED AGAINST ASTM E1300-12AE1 AND FOUND TO BE ACCEPTABLE.
   - 9.3. LAMINATE INTERLAYER SAFLEX PVB BY EASTMAN CHEMICAL CO. PER LATEST MD NOA.
   - 9.4. ALL GLAZING SEAL/GASKET MATERIALS SHALL BE IN COMPLIANCE WITH THE CURRENT EDITION OF THE FLORIDA BUILDING CODE. SEAL/GASKET MATERIALS SHALL BE EDPM WITH A MINIMUM 60 SHORE A DUROMETER WHERE APPLICABLE.

TABLE OF CONTENTS

SHEET	DESCRIPTION
1	GENERAL AND INSTALLATION NOTES
2	ELEVATIONS, ANCHORING, SECTIONS, DETAILS, B.O.M. AND PERFORMANCE RATING TABLE
3	FLASHING OPTIONS
4	OPTIONAL DIFFUSER DETAILS
5	LIGHT KIT
6	DAYLIGHT DIMMER
7	INSTALLATION DETAILS AND SECTIONS

INSTALLATION NOTES:

1. ONE (1) #10 INSTALLATION ANCHOR IS REQUIRED AT EACH ANCHOR LOCATION SHOWN ON SHEETS 2, 3 AND 7.

2. THE NUMBER OF INSTALLATION ANCHORS DEPICTED IS THE MINIMUM NUMBER OF ANCHORS TO BE USED FOR PRODUCT INSTALLATION. ALL UNITS REQUIRE EIGHT (8) ANCHORS MINIMUM LOCATED AT ALL CORNERS. ANCHOR ENGINEERING BASED ON ENGAGEMENT INTO ROOF SHEATHING AND NOT 2X ROOF FRAMING.
   - 2.1. INSTALLATION SHALL BE INTO 7/16" MINIMUM THICKNESS ROOF SHEATHING (SEE NOTE 6 BELOW).
   - 2.2. OPTIONAL INSTALLATION DETAILS A AND B ON SHEET 7 ARE FOR ILLUSTRATIVE PURPOSES ONLY. IF TDD INSTALLATION LOCATION REQUIRES ANCHORS TO ENGAGE INTO 2X FRAMING, THAT IS ACCEPTABLE.

3. ANCHOR REQUIREMENTS - ROOF SHEATHING
   - 3.1. FOR INSTALLATION INTO 7/16" MINIMUM THICKNESS ROOF SHEATHING (SEE NOTE 6 BELOW), USE A #10 TYPE AB PAN HEAD, ROUND HEAD OR TRUSS HEAD TAPPING SCREWS MEETING ASME/ANSI B18.6.4 OF SUFFICIENT LENGTH TO ENSURE PROTRUDING SCREW THREADS AT LEAST 1/2" BEYOND THE INTERIOR SURFACE OF ROOF SHEATHING. EDGE DISTANCE FROM CENTERLINE OF SCREW TO EDGE OF SHEATHING SHALL BE AT LEAST 3/4 INCH.
   - 3.2. FOR INSTALLATION THROUGH ROOF SHEATHING INTO 2X WOOD ROOF FRAMING (SEE NOTE 6 BELOW), USE A #10 TYPE AB PAN HEAD, ROUND HEAD OR TRUSS HEAD TAPPING SCREWS MEETING ASME/ANSI B18.6.4 OF THE SAME LENGTH AS REQUIRED IN NOTE 3.1 ABOVE. EDGE DISTANCE FROM CENTERLINE OF SCREW TO EDGE OF SHEATHING SHALL BE AT LEAST 3/4 INCH.

4. MINIMUM EMBEDMENT AND EDGE DISTANCE EXCLUDE ROOF FINISHES.

5. INSTALLATION ANCHORS MUST BE MADE OF CORROSION RESISTANT MATERIAL OR HAVE A CORROSION RESISTANT COATING.

6. INSTALLATION ANCHOR CAPACITIES FOR PRODUCTS HEREIN ARE BASED ON SUBSTRATE MATERIALS WITH THE FOLLOWING PROPERTIES. ROOF SHEATHING THICKNESS, GROUP OR GRADE MAY BE MANDATED BY JURISDICTION REQUIREMENTS, THEREFORE THICKNESS AND GROUP/GRADE SHOWN BELOW WILL BE CONSIDERED MINIMUM.
   - 6.1. 7/16" THICK PLYWOOD - SPECIES GROUP 1 OR 2 (APA VOLUNTARY PRODUCT STANDARD PS 1) MINIMUM.
   - 6.2. 7/16" OSB - SHEATHING GRADE (APA VOLUNTARY PRODUCT STANDARD PS 2) MINIMUM.

7. INSTALLATION/MOUNTING CONDITIONS AND LIMITATIONS OF USE AS REQUIRED BY THE FOLLOWING SECTIONS OF THE CURRENT EDITION OF THE FLORIDA BUILDING CODE (FBC) AND FLORIDA RESIDENTIAL CODE (FRC) SHALL BE MET.
   - 7.1. FBC, SECTION 2405, SLOPED GLAZING AND SKYLIGHTS
   - 7.2. FBC, SECTION 2610, LIGHT-TRANSMITTING PLASTIC SKYLIGHT GLAZING
   - 7.3. FRC, SECTION R308, SKYLIGHTS AND SLOPED GLAZING

8. INSTALLATION OF A SKYLIGHT WITHOUT A CURB SHALL BE PERMITTED ON ROOFS WITH A MINIMUM SLOPE OF 14 DEGREES (3:12) IN GROUP R-3 OCCUPANCIES. FOR LOW PROFILE ROOFING TILES UTILIZE A SOLATUBE 2.5" HIGH TURRET

9. ALL UNIT SKYLIGHTS INSTALLED IN A ROOF WITH A PITCH FLATTER THAN 14 DEGREES (3:12) SHALL BE EITHER:
   - 9.1. MOUNTED AT LEAST 4 INCHES ABOVE THE PLANE OF THE ROOF ON A CURB CONSTRUCTED AS REQUIRED FOR THE FRAME UNLESS OTHERWISE SPECIFIED IN THE MANUFACTURER'S INSTALLATION INSTRUCTIONS, OR
   - 9.2. MOUNTED UTILIZING A SOLATUBE 2.5" HIGH TURRET.

10. A CURB CONSTRUCTED IN ACCORDANCE WITH THE REQUIREMENTS FOR THE TYPE OF CONSTRUCTION CLASSIFICATION, BUT AT LEAST 4 INCHES ABOVE THE PLANE OF THE ROOF BY OTHERS IS ALLOWED. ADDITIONAL INSTALLATION DETAILING AND ENGINEERED INSTALLATION EVALUATION BY A LICENSED DESIGN PROFESSIONAL WILL BE REQUIRED FOR SUBMITTAL IN ADDITION TO THIS PRODUCT EVALUATION DOCUMENT.

PROJECT NUMBER: 420-0812

REV	DESCRIPTION	DATE	BY

SOLATUBE INTERNATIONAL
2210 OAK RIDGE WAY
VISTA, CA 92081-9341

TITLE: IMPACT & NON-IMPACT 290 DS LOW PROFILE TUBULAR DAYLIGHT DEVICE GENERAL AND INSTALLATION NOTES

DRAWN BY: RJA | DATE: 11/9/20
SCALE: N.T.S. | DRAWING NO: SOLA0016
REV: --- | SHEET: 1 of 7

PREPARED BY:
PTC PRODUCT DESIGN GROUP, LLC
PO BOX 520775
LONGWOOD, FLORIDA 32752
FBPE C.A. NO. 29365
Phone: 321.690.1788
Fax: 321.690.1789
Email: info@ptc-corp.com

Robert J. Amoruso, P.E.
FL P.E. No. 49752

ROBERT JAMES AMORUSO LICENSE No 49752 STATE OF FLORIDA PROFESSIONAL ENGINEER

Digitally signed by Robert J Amoruso
Date: 2020.12.09 15:02:59 -05'00'

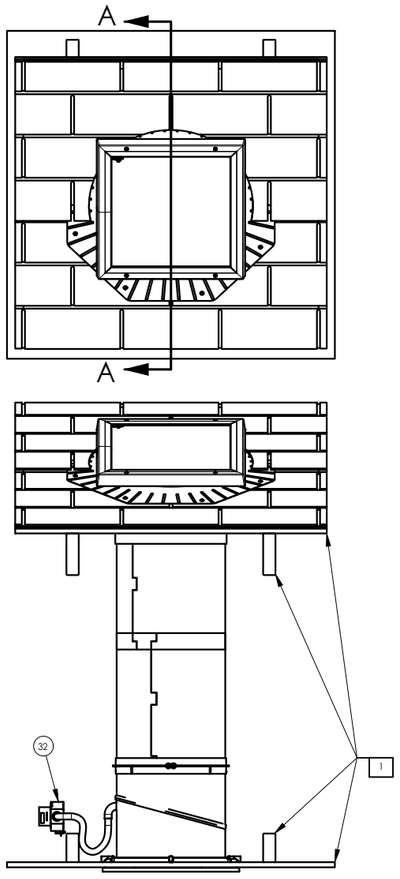

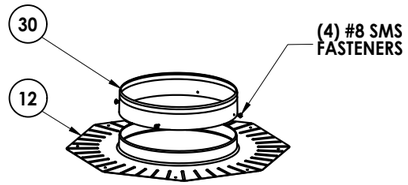

FLASHING SHOWN WITH OPTIONAL 2"-48" TALL TURRET EXTENSION

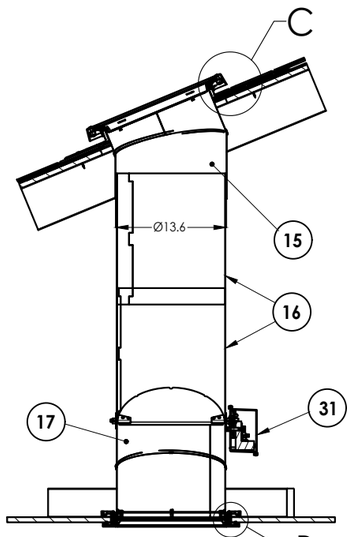

SECTION A-A

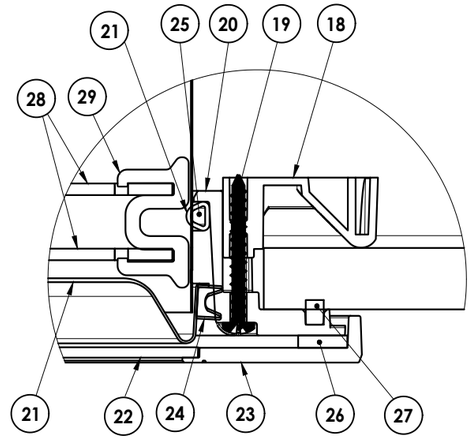

DETAIL B

NOTES:

1. STRUCTURAL ELEMENTS (PLYWOOD, RAFTERS, DRYWALL ETC.) BY OTHERS & SHOWN FOR REFERENCE ONLY
2. ALL TUBE JOINTS & SEAMS TAPED WITH 2" FOIL TAPE (NOT SHOWN)
3. SEE PAGE 4 FOR ALTERNATE DIFFUSER CONFIGURATIONS
4. ITEM #22; RECTANGULAR FOAM OR SEALANT BEAD

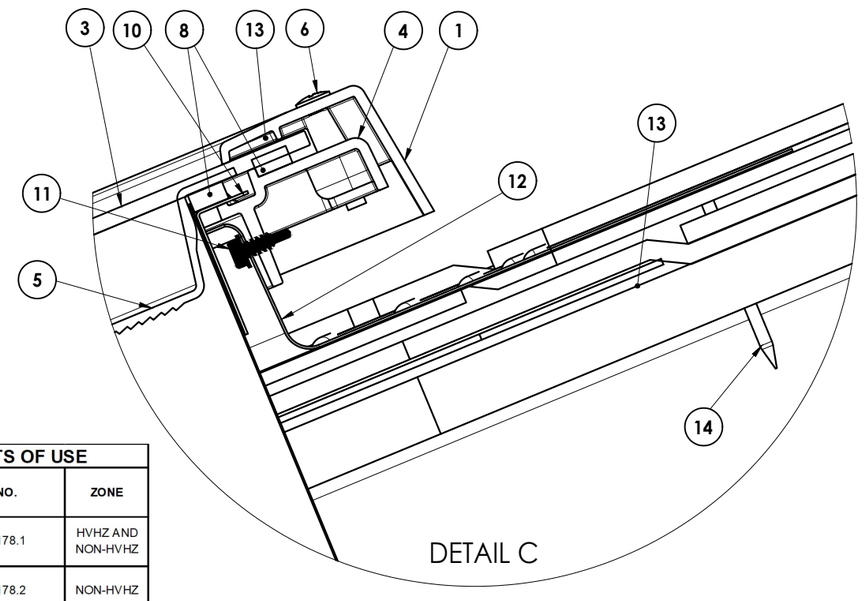

DETAIL C

BILL OF MATERIALS

ITEM NO.	QTY.	PART NO.	DESCRIPTION	MATERIAL
1	1	411190	SASH	ASA
2	4	411210	SASH CLIP (NOT SHOWN)	ASA
3	1	See Glazing Details Table, This Sheet for Derscription	GLAZING	See Glazing Details Table, This Sheet for Derscription
4	1	411060	CONNECTOR FLANGE	ASA
5	1	411460	RAYBENDER LENS	PMMA
6	4	701108	SCREW M5-0.8mm X 30 OVAL, PHIL	STAINLESS STEEL
7	4	701045	NUT SQUARE M5-0.8mm (NOT SHOWN)	STAINLESS STEEL
8	AS REQ.	600325	SEAL	EPDM FOAM
9	2	600045	BUG AND DUST BARRIER (NOT SHOWN)	PU FOAM
10	1	411340	TUBE BELT	STEEL
11	4	701057	SCREW #8 x 5/8" HEX DRILL TIP	STEEL
12	1	VARIES**	FLASHING	STEEL
13	1	700280/700300	SEALANT	URETHANE
14	8	700480	SCREW #10 X 2" SMS	STEEL
15	1	302240	TOP TUBE 290 DS	ALUMINUM LAMINATE
16	1	301800/301830	EXT. TUBE 16"/24" 290 DS	ALUMINUM LAMINATE
17	1	302120	BOTTOM TUBE 290 DS	ALUMINUM LAMINATE
18	4	410220	CLAMP	POLYAMIDE
19	4	700450	SCREW #8 x 1.5" SMS	STEEL
20	1	410415	CEILING RING 290 DS	PMMA
21	1	421345	290 DS NATURAL EFFECT LENS	PET
22	1	410530, 420080	290 DS DIFFUSER PANEL	PMMA, PC
23	1	410715	DRESS RING 290 DS	PMMA
24	1	600290	290 DS EFFECT LENS SEAL	EPDM FOAM
25	1	600445	D-SEAL HOLLOW	EPDM FOAM
26	1	420610	DRESS RING SEAL 290 DS	PE FOAM
27	1	600620	FOAM SEAL RECTANGULAR 3/16" X 1/4"	CLOSED CELL FOAM
	1	-	ALTERNATE (PROVIDED BY USER)	ACRYLIC SEALANT (VARIOUS)
			OPTIONAL COMPONENTS	
ITEM NO.	**QTY.**	**PART NO.**	**DESCRIPTION**	**MATERIAL**
28	2	420260	290 DS INSULATION PANEL	PMMA
29	4	420270	INSULATION PANEL CLIP	PC
30	1	VARIES***	TURRET EXTENSION	STEEL
31	1	570002	290 DS DAYLIGHT DIMMER	
32	1	510000	LIGHT KIT	

** PN'S 230845, 230435

*** PN'S 230760, 230540, 230550, 230560, 230570

PERFORMANCE RATING - LIMITS OF USE

GLAZING DETAIL	DP (psf)	IMPACT RATING	FL NO.	ZONE
A	+/-100 psf	LMI (HVHZ)	FL32178.1	HVHZ AND NON-HVHZ
A	+/-100 psf	MISSILE LEVEL D, WIND ZONE 4	FL32178.2	NON-HVHZ
B	+/-100 psf	N/A	FL32178.3	NON-HVHZ

GLAZING DETAILS

GLAZING DETAIL	BOM ITEM NO.	GLASS TYPE	GLAZING	GLAZING METHOD	DAYLIGHT OPENING (in)	GLASS BITE
A	3	Monolithic (Outer Lite)	5/32" (4mm) clear tempered – 0.090" (2.286 mm) PVB interlayer – 5/32" (4mm) clear tempered	Interior set, wet glazed to plastic flashing and secured at four points with tension arms.	14-1/2 x 14-1/2	1"
B	3	Monolithic (Outer Lite)	5/32" (4mm) clear tempered	Interior set, wet glazed to plastic flashing and secured at four points with tension arms.	14-1/2 x 14-1/2	1"
A or B	5	Monolithic (Inner Lite)	1/8" clear prismatic acrylic lens	Sealed around perimeter with 3/8" x 3/16" foam peal and stick gasket secured around perimeter of lens	n/a	n/a
A or B (1)	22	Monolithic (Diffuser Lens)	0.105" thick acrylic diffusing lens (p/n 410530) or 0.022" thick polycarbonate diffusing lens (p/n 420080).	Dry glazed with retention band.	n/a	n/a

(1) Diffuser Lens is an interior located glazing and is not structurally significant.

PROJECT NUMBER: 420–0812

REV	DESCRIPTION	DATE	BY

SOLATUBE INTERNATIONAL
2210 OAK RIDGE WAY
VISTA, CA 92081–9341

TITLE:
IMPACT 290 DS LOW PROFILE
TUBULAR DAYLIGHT DEVICE
ELEVATION, ANCHORING, SECTIONS, DETAILS AND B.O.M.

DRAWN BY: RJA
DATE: 11/9/20
SCALE: N.T.S.
DRAWING NO: SOLA0016
REV: ___
SHEET: 2 of 7

PREPARED BY:
PTC PRODUCT DESIGN GROUP, LLC
PO BOX 520775
LONGWOOD, FLORIDA 32752
FBPE C.A. NO. 29935
Phone: 321.690.1788
Fax: 321.690.1789
Email: info@ptc-corp.com

Robert J. Amoruso, P.E.
FL P.E. No. 49752

ROBERT JAMES AMORUSO LICENSE No 49752 STATE OF FLORIDA PROFESSIONAL ENGINEER

Digitally signed by Robert J Amoruso
Date: 2020.12.09 15:03:13 -05'00'

290DS LOW PROFILE TTD FLASHING OPTIONS

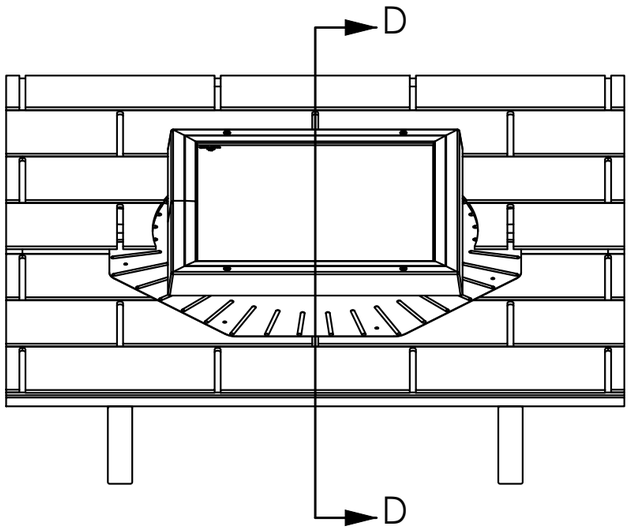

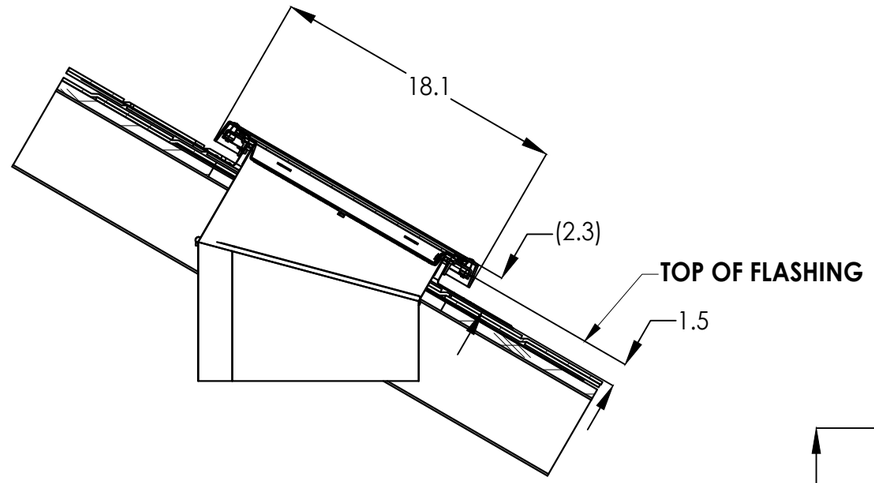

FLAT 1.5" FLASHING

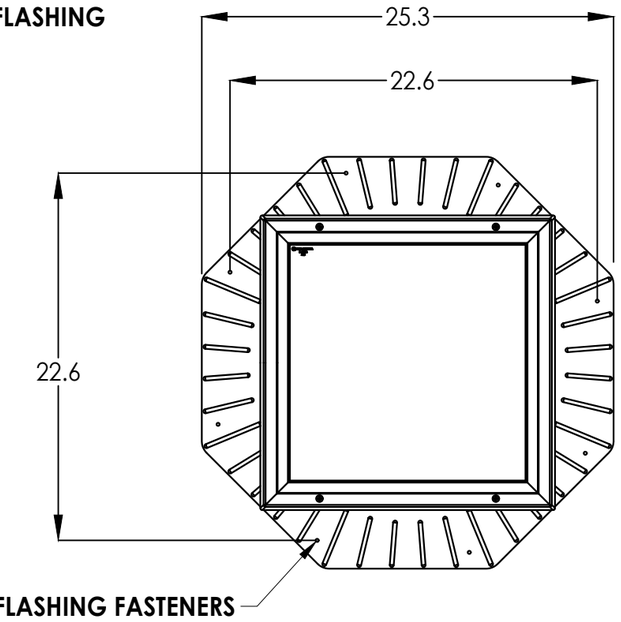

FLASHING FASTENER SPACING
FLAT 4", FLAT 6" & PITCHED

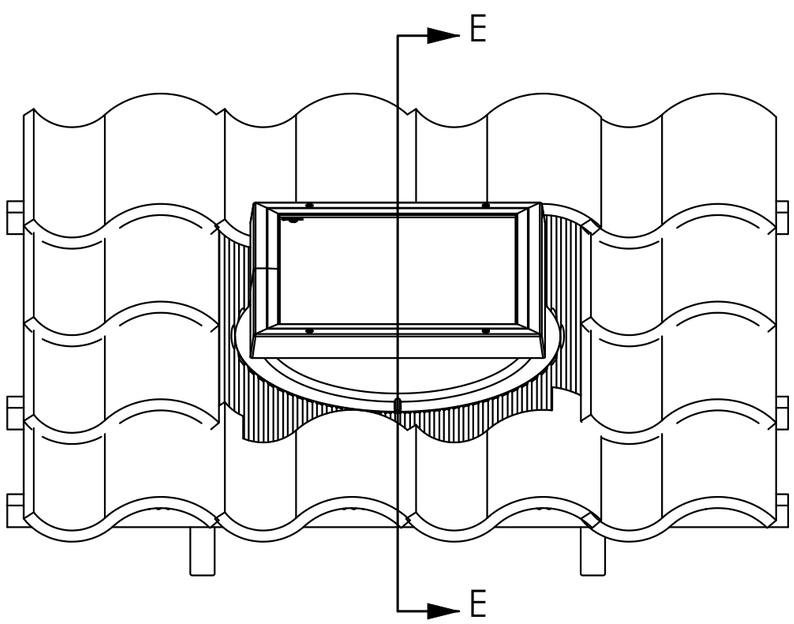

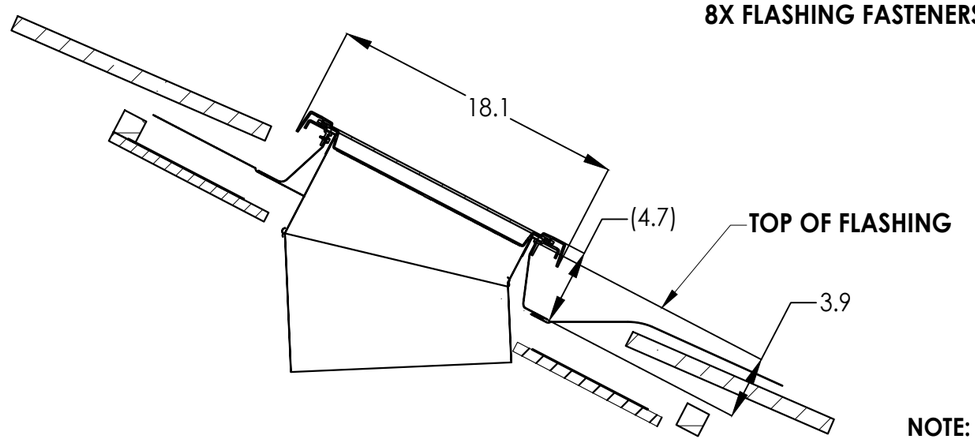

FLAT 4" TILE FLASHING

NOTE:

ALSO AVAILABLE IN 2.5" HIGH TURRET FOR LOW PROFILE ROOFING TILES

PROJECT NUMBER: 420–0812

REV	DESCRIPTION	DATE	BY

SOLATUBE INTERNATIONAL
2210 OAK RIDGE WAY
VISTA, CA 92081–9341

TITLE: IMPACT 290 DS LOW PROFILE TUBULAR DAYLIGHT DEVICE FLASHING OPTIONS

DRAWN BY: RJA
DATE: 11/9/20
SCALE: N.T.S.
DRAWING NO: SOLA0016
REV: ---
SHEET: 3 of 7

PREPARED BY:
PTC PRODUCT DESIGN GROUP, LLC
PO BOX 520775
LONGWOOD, FLORIDA 32752
FBPE C.A. NO. 25905
Phone: 321.690.1788
Fax: 321.690.1789
Email: info@ptc-corp.com

Robert J. Amoruso, P.E.
FL P.E. No. 49752

ROBERT JAMES AMORUSO LICENSE No 49752 STATE OF FLORIDA PROFESSIONAL ENGINEER

Digitally signed by Robert J Amoruso
Date: 2020.12.09 15:03:24 -05'00'

'TIER DROP' DIFFUSER ASSEMBLY

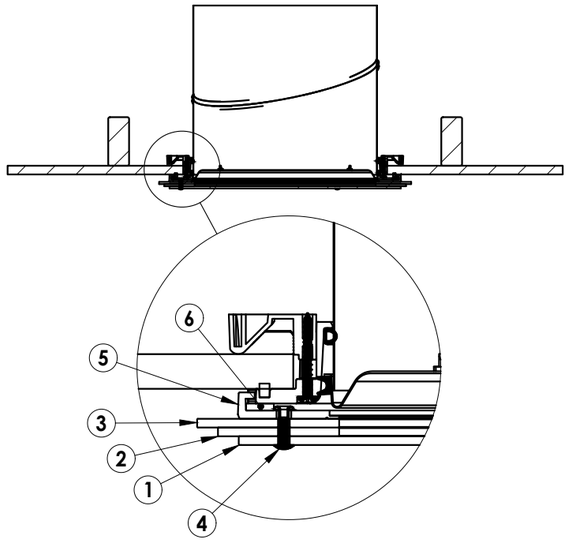

290 DS TIER DROP DIFFUSER ASSEMBLY COMPONENTS				
ITEM NO.	QTY.	PART NO.	DESCRIPTION	MATERIAL
1	1	400250	ACRYLIC BOTTOM DISK 290 DS	ACRYLIC
2	1	400255	ACRYLIC MIDDLE DISK 290 DS	ACRYLIC
3	1	400260	ACRYLIC TOP DISK 290 DS	ACRYLIC
4	3	721250	RIVET BARREL 3/16 X 24/32 SS	STAINLESS STEEL
5	1	410715	DRESS RING WITH GROOVE 290 DS	ACRYLIC
6	1	420610	DRESS RING SEAL 290 DS	PE FOAM

'OPTIVIEW' DIFFUSER ASSEMBLY

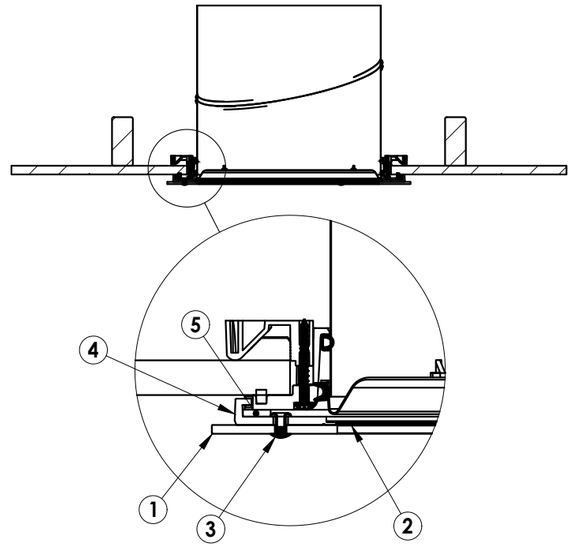

290 DS OPTIVIEW DIFFUSER ASSEMBLY COMPONENTS				
ITEM NO.	QTY.	PART NO.	DESCRIPTION	MATERIAL
1	1	400230	ACRYLIC OPTIVIEW DISK 290DS	ACRYLIC
2	1	420080	DIFFUSER 290 PANEL OPTIVIEW	PC
3	3	721130	RIVET BARREL 3/16 X 12/32 SS	STAINLESS STEEL
4	1	410715	DRESS RING WITH GROOVE 290 DS	ACRYLIC
5	1	420610	DRESS RING SEAL 290 DS	PE FOAM

'JUST FROST' DIFFUSER ASSEMBLY

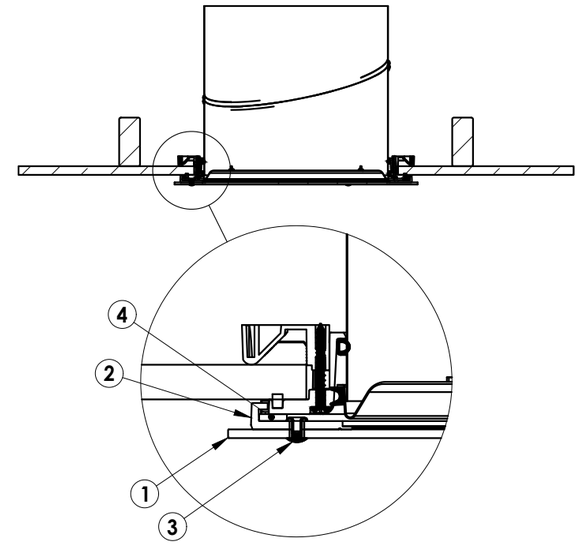

290 DS JUST FROST DIFFUSER ASSEMBLY COMPONENTS				
ITEM NO.	QTY.	PART NO.	DESCRIPTION	MATERIAL
1	1	400220	ACRYLIC JUSTFROST DISK 290 DS	ACRYLIC
2	1	410715	DRESS RING WITH GROOVE 290 DS	ACRYLIC
3	3	721130	RIVET BARREL 3/16 X 12/32 SS	STAINLESS STEEL
4	1	420610	DRESS RING SEAL 290 DS	PE FOAM

'AURORA GLO' DIFFUSER ASSEMBLY

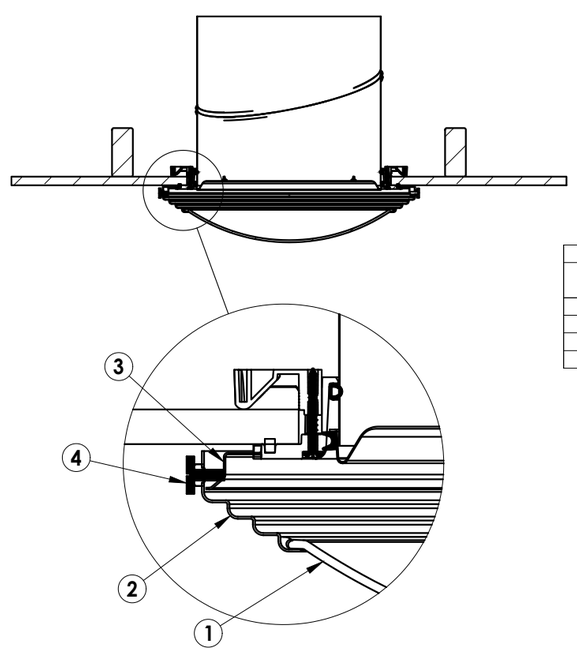

AURORA GLO DIFFUSER ASSEMBLY COMPONENTS				
ITEM NO.	QTY.	PART NO.	DESCRIPTION	MATERIAL
1	1	400281	290 DS GLASS ROUND SHALLOW	TEMPERED GLASS
2	1	492902	290 DS ROUND BOWL ROSE FRAME	STEEL
3	1	492900	290 DS ROUND BELT	STEEL
4	4	700781	M5 SHOULDER BOLT	STEEL

PROJECT NUMBER: 420-0812

REV	DESCRIPTION	DATE	BY

SOLATUBE INTERNATIONAL
2210 OAK RIDGE WAY
VISTA, CA 92081-9341

TITLE: IMPACT 290 DS LOW PROFILE TUBULAR DAYLIGHT DEVICE OPTIONAL DIFFUSER DETAILS

DRAWN BY: RJA
DATE: 11/9/20
SCALE: N.T.S.
DRAWING NO: SOLA0016
REV: ---
SHEET: 4 of 7

PREPARED BY:
PTC PRODUCT DESIGN GROUP, LLC
PO BOX 520775
LONGWOOD, FLORIDA 32752
FDPEC CA NO: 29535
Phone: 321.690.1788
Fax: 321.690.1789
Email: info@ptc-corp.com

Robert J. Amoruso, P.E.
FL P.E. No. 49752

ROBERT JAMES AMORUSO LICENSE No 49752 STATE OF FLORIDA PROFESSIONAL ENGINEER

Digitally signed by Robert J Amoruso
Date: 2020.12.09 15:03:35 -05'00'

290 DS SOLATUBE
UNIVERSAL LIGHT KIT

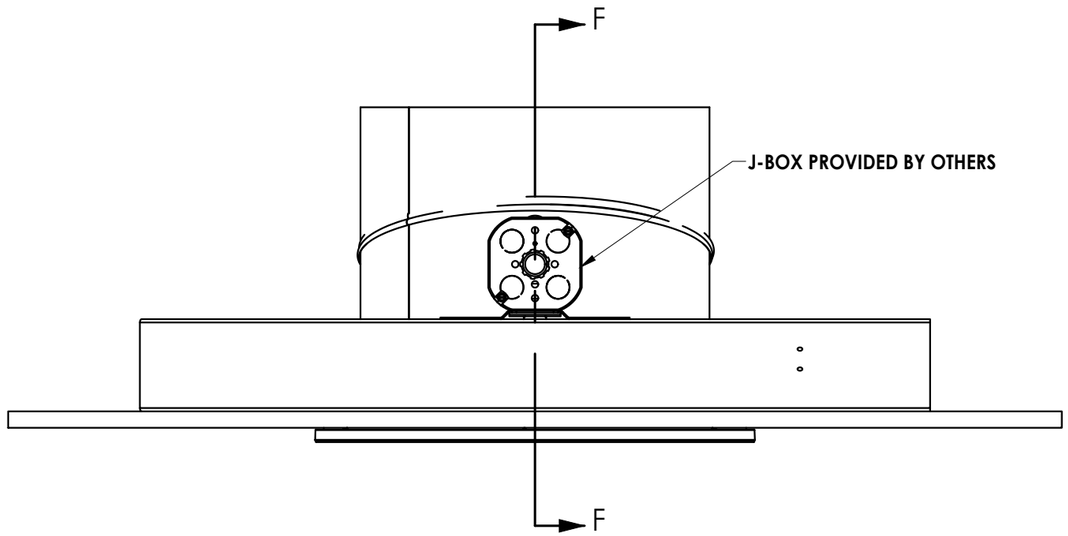

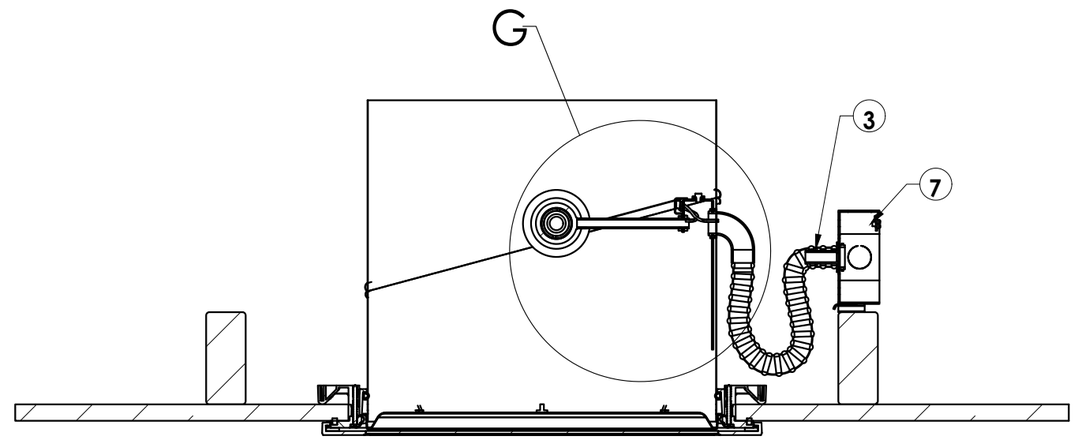

SECTION F-F

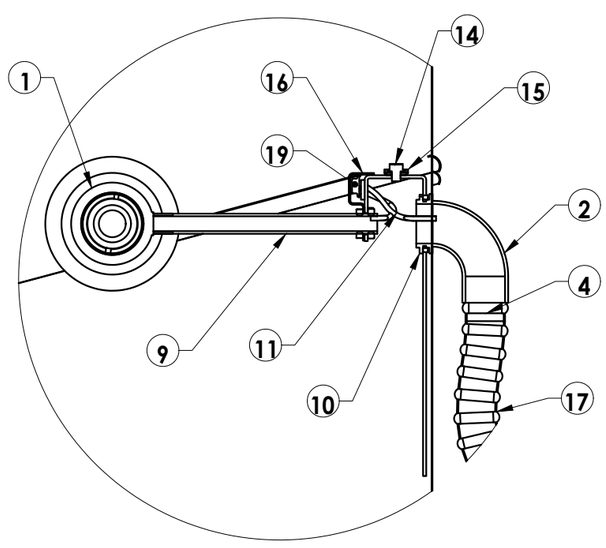

DETAIL G

ITEM NO.	PART NO.	DESCRIPTION	NOTE	QTY.
1	501000	LAMPHOLDER, TWIN, MEDIUM BASE, CERAMIC BODY; PROVIDED WITH LEADS		1
2	500230	CONNECTOR 90 DEG 3/8"		1
3	500240	CONNECTOR STRAIGHT 3/8"		1
4	500540	BUSHING ANTI-SHORT RED		1
5	500630	NUT WIRE 73B	NOT SHOWN	2
6	500640	SLEEVE CRIMP 10-18 GA	NOT SHOWN	1
7	501070	SCREW GROUND 10-32 X .375"		1
8	501080	CONDUIT FOAM SEAL 1/8" H X 3/4"W	NOT SHOWN	1
9	501020	CONDUIT 1/8 IPS X 4.5"		1
10	500510	NUT LOCK 1/8 IPS		2
11	500600	WIRE HARNESS: THERMAL PROTECTOR & WIRE LEADS		1
12	500610	WIRE LEAD WHITE	NOT SHOWN	1
13	500620	WIRE LEAD GREEN	NOT SHOWN	1
14	500650	SCREW GRND 8-32 X 1/4"		1
15	500660	WASHER GRND SCREW		1
16	500690	BRACKET-U LIGHTED UNITS		1
17	500910	CONDUIT FLEXIBLE 3/8"X48"		1
18	501160	LABEL UL	NOT SHOWN	1
19	500605	THERMAL PROTECTOR HOUSING		1

PROJECT NUMBER: 420-0812

REV	DESCRIPTION	DATE	BY

SOLATUBE INTERNATIONAL
2210 OAK RIDGE WAY
VISTA, CA 92081-9341

TITLE: IMPACT 290 DS LOW PROFILE TUBULAR DAYLIGHT DEVICE LIGHT KIT

DRAWN BY: RJA
DATE: 11/9/20
SCALE: N.T.S.
DRAWING NO: SOLA0016
REV: ---
SHEET: 5 of 7

PREPARED BY:
PTC PRODUCT DESIGN GROUP, LLC
PO BOX 520775
LONGWOOD, FLORIDA 32752
FDPE CA I NO: 25935
Phone: 321.690.1788
Fax: 321.690.1789
Email: info@ptc-corp.com

Robert J. Amoruso, P.E.
FL P.E. No. 49752

ROBERT JAMES AMORUSO LICENSE No 49752 STATE OF FLORIDA PROFESSIONAL ENGINEER

Digitally signed by Robert J Amoruso
Date: 2020.12.09 15:03:47 -05'00'

290DS SOLATUBE DAYLIGHT DIMMER

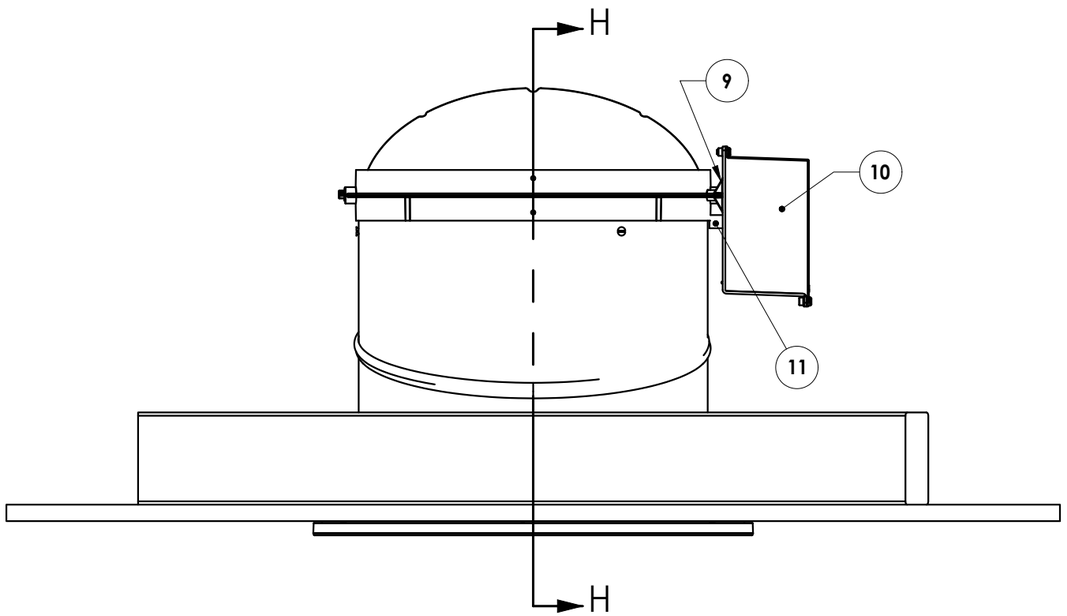

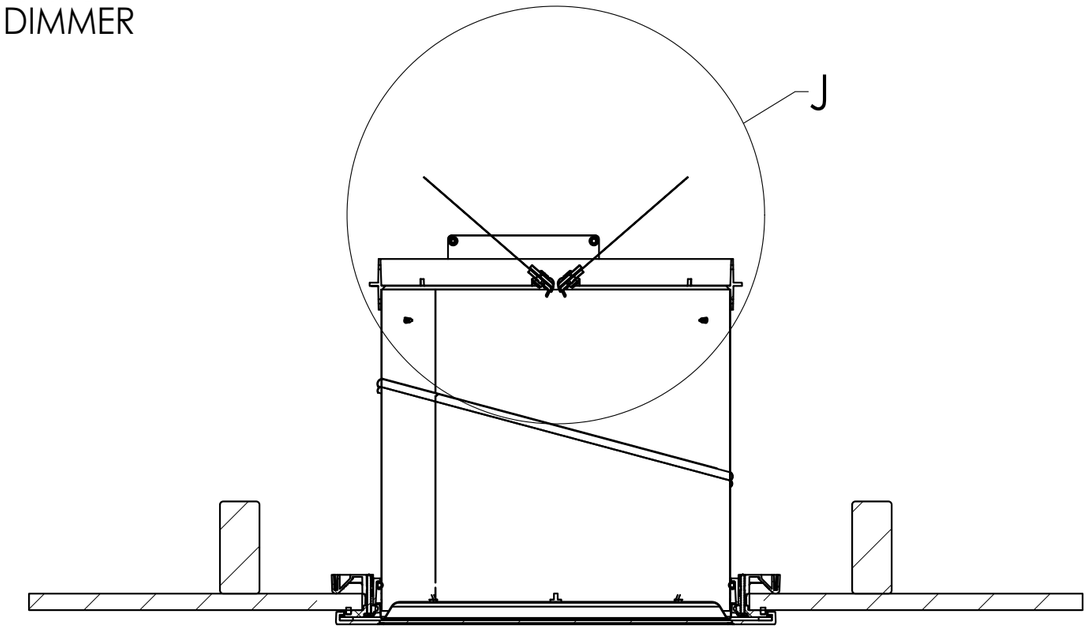

SECTION H-H

NOTE:
DAYLIGHT DIMMER ASSEMBLY SHOWN ASSEMBLED TO 290DS BOTTOM ANGLE ADAPTER

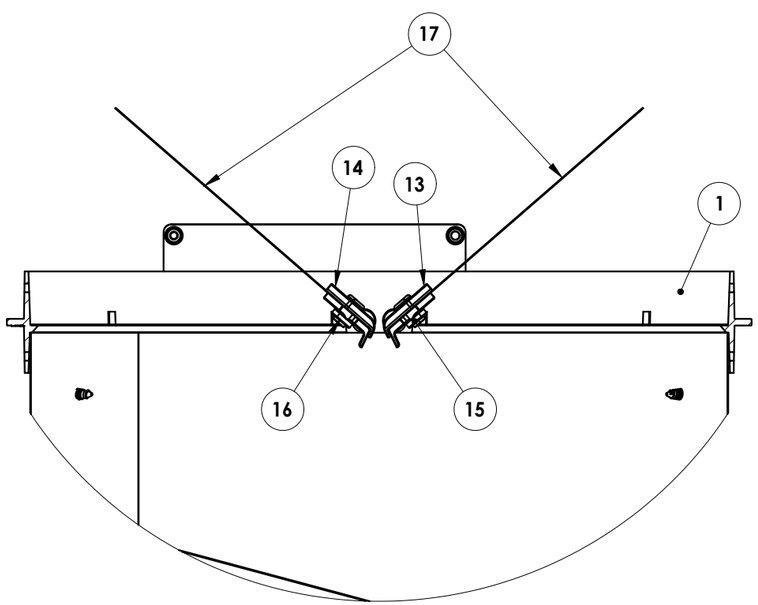

DETAIL E

ITEM NO.	PART NUMBER	DESCRIPTION	QTY.
1	420780	RING 14" DAYLIGHT DIMMER	1
2	570005	POWER SUPPLY (NOT SHOWN)	1
3	570008	RETAINER, E-RING, 5/16 (NOT SHOWN)	4
4	570009	PCB, MOTOR CONTROL (NOT SHOWN)	1
5	570010	MOTOR GEARED (NOT SHOWN)	1
6	570015	CAM, DRIVE MECHANISM (NOT SHOWN)	1
7	570016	DOG, DRIVE MECHANISM (NOT SHOWN)	1
8	570018	LID, DRIVE MECHANISM (NOT SHOWN)	1
9	570020	MOUNT, JUNCTION BOX	1
10	570021	COVER, JUNCTION BOX	1
11	570022	SPACER, NYLON 1/2"	1
12	570024	CABLE CLAMP, DLD (NOT SHOWN)	1
13	570025	CLIP, RIGHT	2
14	570026	CLIP, LEFT	2
15	570027	CLIP, BACK RIGHT	2
16	570028	CLIP, BACK LEFT	2
17	570031	DISK, 14" DIMMER	2
18	721050	SCREW TRILOB #4 X 3/16 (NOT SHOWN)	4
19	721055	SCREW TRILOB #6 X 3/8 (NOT SHOWN)	8
20	721060	SCREW TRILOB #8 X 3/8 (NOT SHOWN)	8
21	721065	SCREW TRILOB #8 X 1.0" (NOT SHOWN)	4
22	721070	SCREW TRILOB #12 X 1/2 (NOT SHOWN)	2

PROJECT NUMBER: 420-0812

REV	DESCRIPTION	DATE	BY

SOLATUBE INTERNATIONAL
2210 OAK RIDGE WAY
VISTA, CA 92081-9341

TITLE: IMPACT 290 DS LOW PROFILE TUBULAR DAYLIGHT DEVICE DAYLIGHT DIMMER

DRAWN BY: RJA
DATE: 11/9/20
SCALE: N.T.S.
DRAWING NO: SOLA0016
REV: ---
SHEET: 6 of 7

PREPARED BY:
PTC PRODUCT DESIGN GROUP, LLC
PO BOX 520775
LONGWOOD, FLORIDA 32752
FDPE CA NO: 29535
Phone: 321.690.1788
Fax: 321.690.1789
Email: info@ptc-corp.com

Robert J. Amoruso, P.E.
FL P.E. No. 49752

ROBERT JAMES AMORUSO LICENSE No 49752 STATE OF FLORIDA PROFESSIONAL ENGINEER

Digitally signed by Robert J Amoruso
Date: 2020.12.09 15:03:59 -05'00'

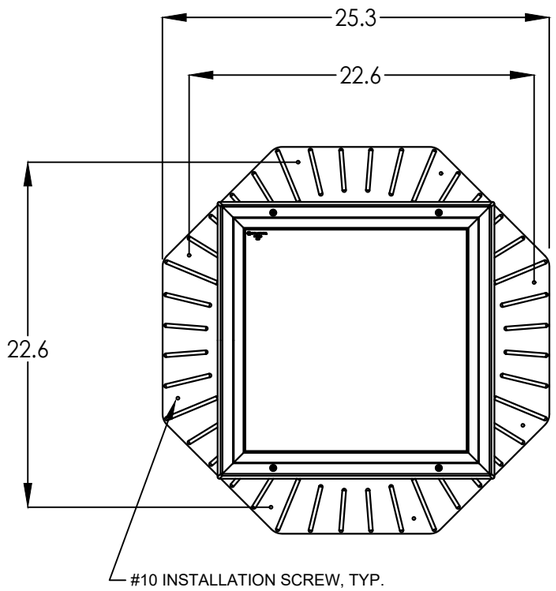

290 DS
SOLATUBE FLASHING INSTALLATION ON ROOF SHEATHING ONLY
(SEE INSTALLATION NOTE 2 ON SHEET 1)

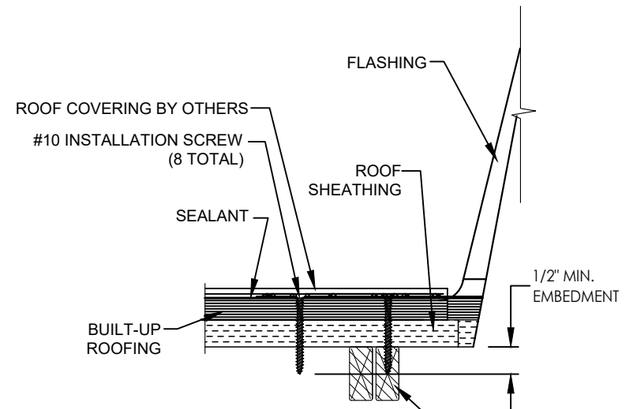

SECTION D - D

290 DS
SOLATUBE FLASHING INSTALLATION ON ROOF SHEATHING & 2X FRAMING
(SEE INSTALLATION NOTE 2 ON SHEET 1)

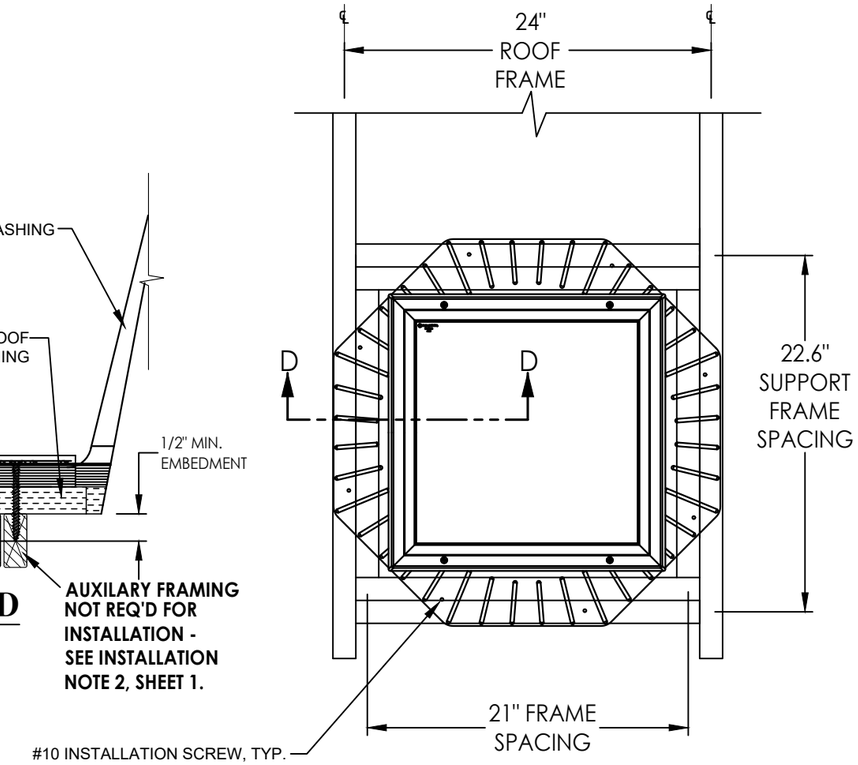

FRAMING DETAIL A

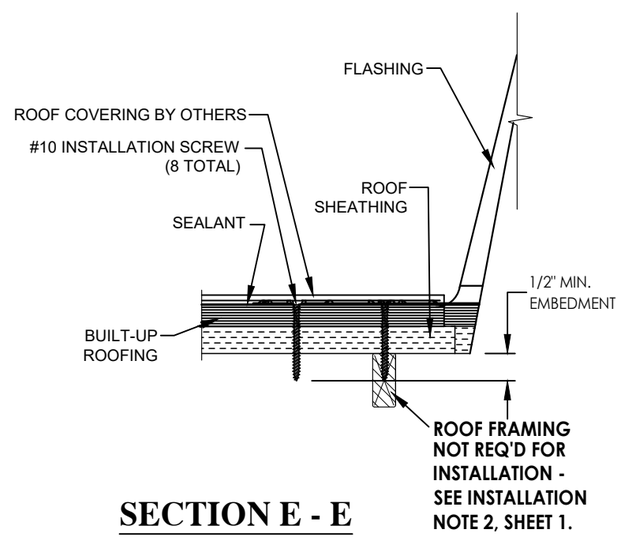

SECTION E - E

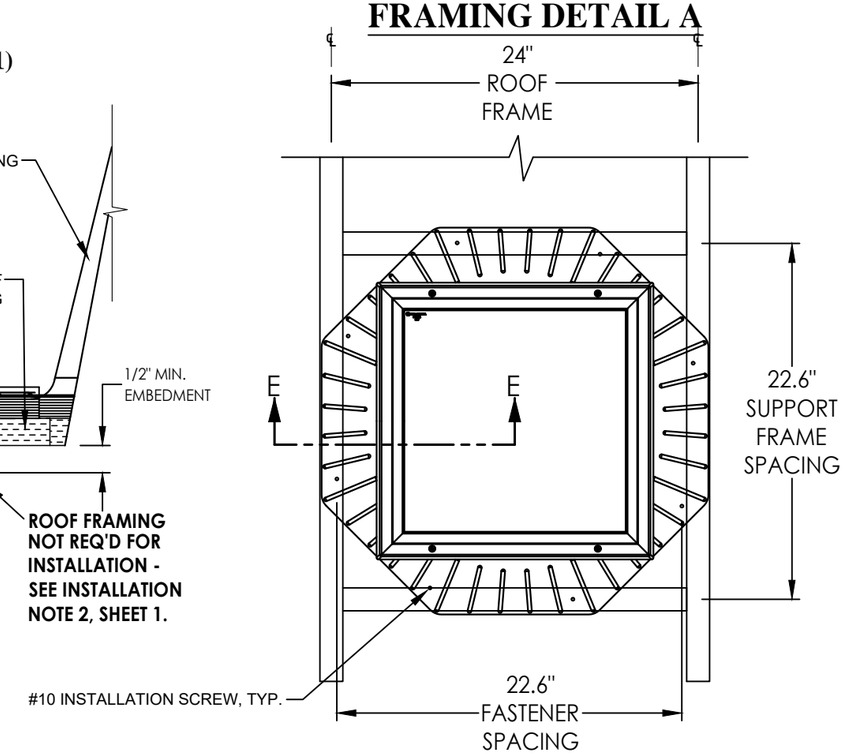

FRAMING DETAIL B

PROJECT NUMBER: 420-0812

REV	DESCRIPTION	DATE	BY

SOLATUBE INTERNATIONAL
2210 OAK RIDGE WAY
VISTA, CA 92081-9341

TITLE: IMPACT 290 DS LOW PROFILE TUBULAR DAYLIGHT DEVICE INSTALLATION DETAILS AND SECTIONS

DRAWN BY: RJA | DATE: 11/9/20
SCALE: N.T.S. | DRAWING NO: SOLA0016
REV: --- | SHEET: 4 of 7

PREPARED BY:
PTC PRODUCT DESIGN GROUP, LLC
PO BOX 520775
LONGWOOD, FLORIDA 32752
FBPE C.A. NO. 25935
Phone: 321.690.1788
Fax: 321.690.1789
Email: info@ptc-corp.com

Robert J. Amoruso, P.E.
FL P.E. No. 49752

ROBERT JAMES AMORUSO LICENSE No 49752 STATE OF FLORIDA PROFESSIONAL ENGINEER

Digitally signed by Robert J Amoruso
Date: 2020.12.09 15:04:09 -05'00'