Evaluation Report

Metal Roof Panel Assembly

Advantage Roof Panel (Horizontal)

Manufacturer:

Advanced Aluminum

2941 Parkway Street
Lakeland, FL 33811
(863) 648-5787

for

Florida Product Approval

FL 31736.2 R2

Florida Building Code 8th Edition (2023)

Method:	**1 - D**
Category:	**Structural Components**
Sub - Category:	**Roof Deck**

Product:	Advantage Roof Panel
Material:	Steel
Panel Thickness:	29 gauge, Minimum
Panel Width:	36”
Support:	14 Steel Supports

This item has been digitally signed and sealed by James L. Buckner, P.E., on this date below. Printed copies of this document are not considered signed and sealed, and the signature must be verified on any electronic copies.

Prepared by:
James L. Buckner, P.E., S.E.C.B.
Florida Professional Engineer # 31242
Florida Evaluation ANE ID: 1916
Report No. 23-565.2-ARPH-S9S-ER
(Revises 20-273.2-ARPH-S9S-ER, FL31736.2 R1)
Date: 10/11/2023

JAMES L. BUCKNER
LICENSE
No 31242
STATE OF FLORIDA
PROFESSIONAL ENGINEER

James L. Buckner, P.E.
FL31242

Date: 2023.10.11
'13:47:53 -04'00

Contents:

Evaluation Report Pages 1 – 6

Manufacturer: **Advanced Aluminum**
2941 Parkway Street
Lakeland, FL 33811
(863) 648-5787
www.advaluminum.com

Product Name: **Advantage Roof Panel**

Product Category: Structural Components

Product Sub-Category Roof Deck

Compliance Method: State Product Approval Rule 61G20-3.005 (1) (d)

Product/System Description: Steel Roof Panel Assembly
steel panel, 29 Gauge, 36" wide, 3/4" major rib height roof panel mechanically attached to steel supports.

Product Assembly as Evaluated: Refer to Page 4 of this report for product assembly components/materials & standards:

1. Roof Panel
2. Panel Fasteners

Support: **Type:**
Steel Support
(Design of support is outside the scope of this evaluation.)

Description:
- Material Thickness: 14 Gauge Minimum
- Support Spacing: 5 ft. o.c. Maximum
- Yield Strength: 50 ksi Minimum

Slope: Minimum slope shall be in compliance with FBC Chapter 15 based on the type of roof covering, applicable code sections and in accordance with manufacturer's recommendations.

Performance: Wind Resistance:
- Positive Design Pressure: **+ 26.0 PSF**
- Negative Design Pressure: **- 20.6 PSF**

** Allowable design pressure(s) for allowable stress design (ASD).*
(Refer to attachment details herein)

Performance Standards: The product described herein has demonstrated compliance with:

- ASTM E 1592-05 (2017) – *Test Method for Structural Performance of Sheet Metal Roof and Siding Systems By Uniform Static Air Pressure Difference*

Standards Equivalency: The ASTM E 1592-05 (2012) standard version used to test the evaluated product assembly is equivalent with the prescribed standards in ASTM E 1592-05 (2017) adopted by the Florida Building Code 8th Edition (2023).

Code Compliance: The product(s) described herein have demonstrated compliance with the performance standards listed above as referenced in the:
Florida Building Code 8th (2023)
International Building Code 2021

Evaluation Report Scope: This product evaluation is limited to compliance with the structural requirements of the Florida Building Code, as related to the scope section to Florida Product Approval Rule 61G20-3.001.

Limitations and Conditions of Use:

- Diaphragm and axial load capacity is outside the scope of this evaluation.
- <u>Scope of "Limitations and Conditions of Use" for this evaluation:</u>
  This evaluation report for "Optional Statewide Approval" contains technical documentation, specifications and installation method(s) which include "Limitations and Conditions of Use" throughout the report in accordance with Rule 61G20-3.005. Per Rule 61G20-3.004, the Florida Building Commission is the authority to approve products under "Optional Statewide Approval".
- <u>Option for application outside "Limitations and Conditions of Use"</u>
  Rule 61G20-3.005(1)(e) allows engineering analysis for "project specific approval by the local authorities having jurisdiction in accordance with the alternate methods and materials authorized in the Code". Any modification of the product as evaluated in this report and approved by the Florida Building Commission is outside the scope of this evaluation and will be the responsibility of others.
- This report is a building code product evaluation per FLPE rule (FAC) 61G15-36 to comply with Florida product approval rule (FAC) 61G20-3. This evaluation report is part of the Florida Building Commission approval for the listed code related criteria. This report by James Buckner, P.E. and CBUCK Engineering is not a design certification of code compliance construction submittal documentation, per FBC section 107, for any individual structure, site specific or permit design.
- All metal components and fasteners shall be corrosion resistant in accordance with applicable sections of FBC.
- Design of support system is outside the scope of this report. Support shall be designed by others and shall comply with Chapter 16 for structural loading
- Fire Classification is outside the scope of Rule 61G20-3 and is therefore not included in this evaluation
- This evaluation report does not evaluate the use of this product for use in the High Velocity Hurricane Zone (HVHZ) code section. (Dade & Broward Counties)

Quality Assurance:

The manufacturer has demonstrated compliance of wall panel products in accordance with the Florida Building Code and Rule 61G20-3.005 (3) for manufacturing under a quality assurance program audited by an approved quality assurance entity through **Architectural Testing, Inc., an Intertek Company** (FBC Organization ID# QUA 1844).

Components/Materials (by Manufacturer):

Roof Panel:

Product Identification:	**Advantage Roof Panel**
Orientation:	Horizontal
Material:	Steel
Thickness:	29 gauge (min.)
Panel Width:	36" (max.) Coverage
Major Rib Height:	3/4"
Yield Strength:	40 ksi min.
Corrosion Resistance:	In compliance with FBC Section 1507.4.3: • ASTM A792 coated, or • ASTM A653 G90 galvanized steel

Panel Fasteners:

Type:	Hex-Head self-drilling screws with EPDM washers
Size:	12 - 14 x 1-1/4" Min. Length
Corrosion Resistance:	Per FBC Section 1506.6 and 1507.4.4
Standard:	Per ANSI/ASME B18.6.4
Fastener Location:	Refer to Drawings at the end of this report

Installation:

Installation Method:
(Refer to drawings at the end of this report.)

Install the "Advantage Roof Panel (Vertical)" system panel assembly in compliance with the installation method listed in this report and applicable code sections of FBC 8th Edition (2023). The installation method described herein is in accordance with the scope of this evaluation report. Refer to manufacturer's installation instructions as a supplemental guide for attachment.

Referenced Data:

1. ASTM E 1592-05 Uplift Test
   By Farabaugh Testing & Engineering
   (FBC Organization ID# TST 1654)
   Report #: T138-20, Report Date: 2/20/20

2. Quality Assurance
   Architectural Testing, Inc., an Intertek Company
   (FBC Organization ID# QUA 1844).

3. Certification of Independence
   By James L. Buckner, P.E. @ CBUCK Engineering
   (FBC Organization # ANE 1916)

Installation Method

Advanced Aluminum

"Advantage Roof Panel (Horizontal)" Attached to 14 Ga. Steel Supports

Profile Drawings

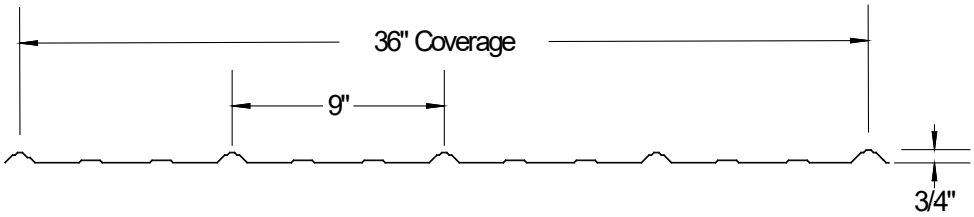

"Advantage" Roof Panel
Typical Panel Profile View (N.T.S.)

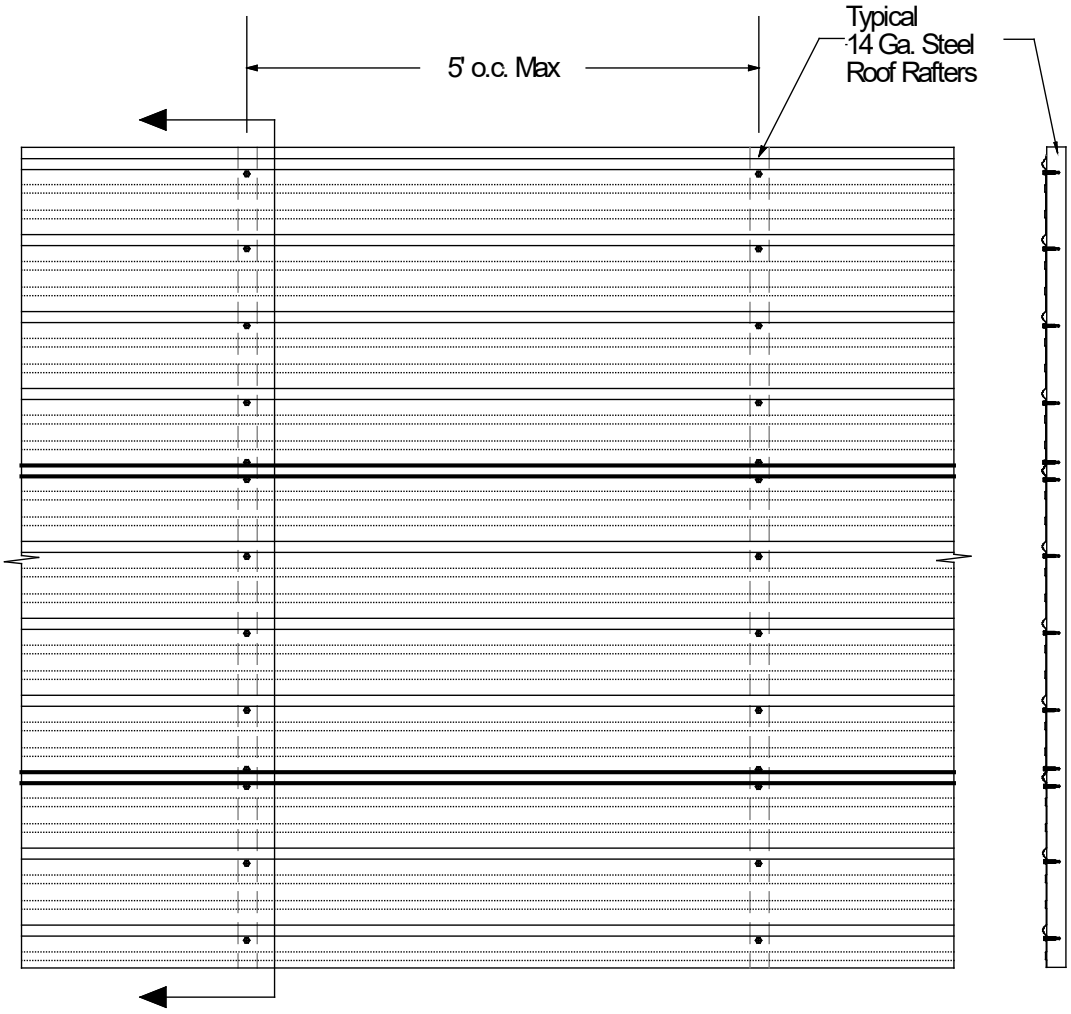

Typical Field of Panel Assembly

Section View (N.T.S.)

Installation Method

Advanced Aluminum

"Advantage Roof Panel (Vertical) Attached to 18 Ga. Steel Hat Channels Steel Hat Channels Attached to 14 Ga. Steel Supports

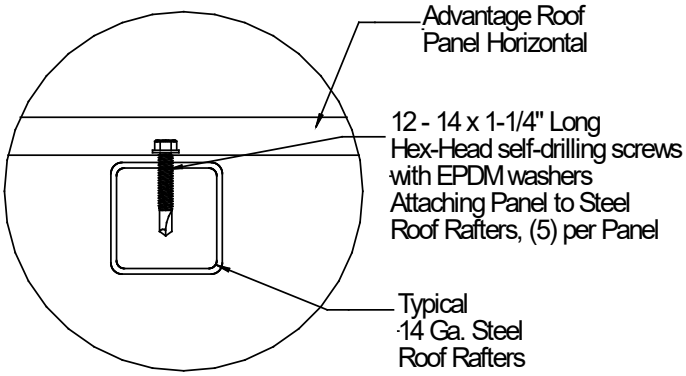

Detail ①

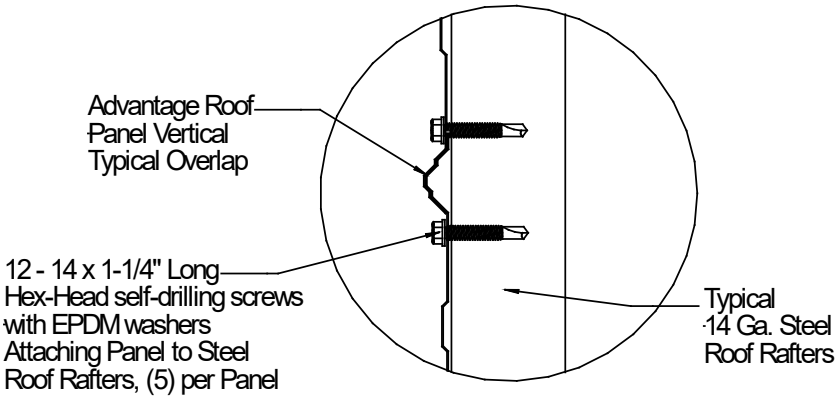

Detail ②