This product is now proudly being offered under the ASSA ABLOY ACCENTRA™ brand, effective June 20, 2023. Visit YaleCommercial.com/en/Today for support and information.

7250M(F)(WS)

SquareBolt® Exit Device Series (Single Doors or Pairs with Mullion) Patent 5,605,362

ACCENTRA
ASSA ABLOY

Installation Instructions

For Doors of Either Hand

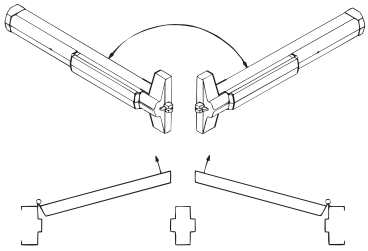

RHR Door LHR Door

Outside Trim
Device is packed ready for any ASSA ABLOY ACCENTRA 500F, 510F or 480F.

7250M: Panic Label
7250MF: Fire Label
7250M(F)WS: Windstorm Label

Packed for reinforced metal doors. Optional sex nuts required for composite, wood and unreinforced metal doors.

NOTE: These installation instructions cover only standard products. To install options use installation instructions packed with optional component, or contact the factory.

Windstorm Application

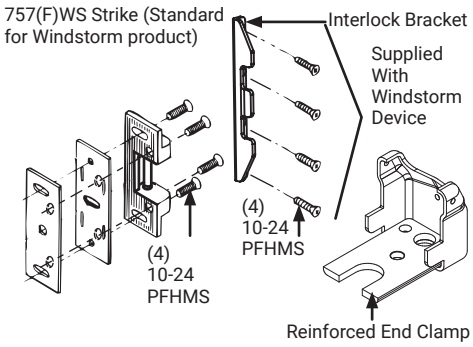

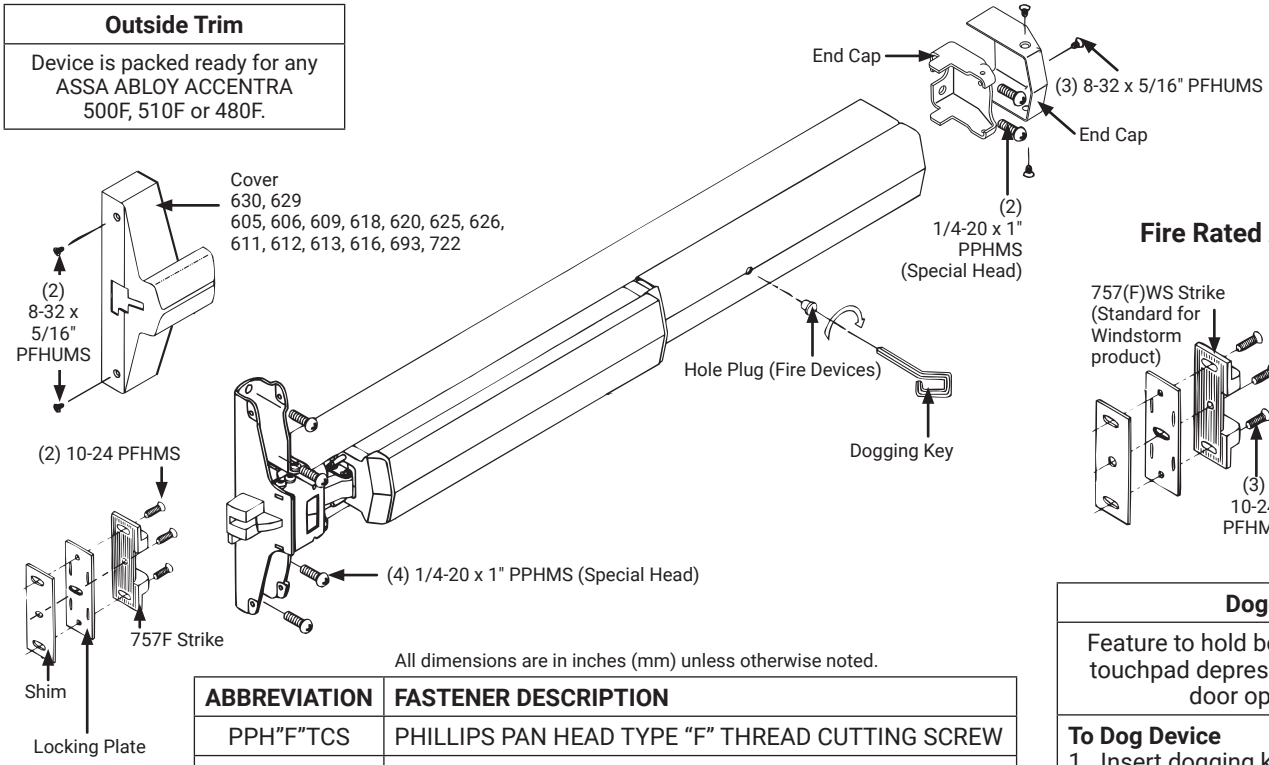

Fire Rated Application

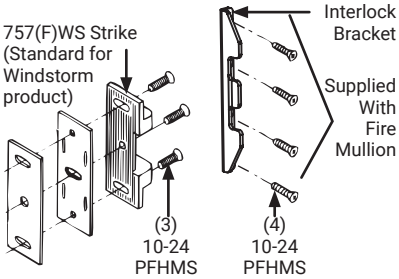

All dimensions are in inches (mm) unless otherwise noted.

ABBREVIATION	FASTENER DESCRIPTION
PPH"F"TCS	PHILLIPS PAN HEAD TYPE "F" THREAD CUTTING SCREW
PRHMS	PHILLIPS ROUND HEAD MACHINE SCREW
PFHMS	PHILLIPS FLAT HEAD MACHINE SCREW
PFHUMS	PHILLIPS FLAT HEAD UNDER CUT MACHINE SCREW

Dogging
Feature to hold bolts retracted and touchpad depressed, for push-pull door operation.
To Dog Device 1. Insert dogging key. 2. Hold touchbar depressed. 3. Turn key 1/4 turn clockwise.
(Not a feature of fire labeled devices.)

⚠ WARNING

This product can expose you to lead which is known to the state of California to cause cancer and birth defects or other reproductive harm. For more information go to www.P65warnings.ca.gov.

⚠ WARNING

Attention Installer: Any retrofit or other field modification to a fire rated opening can potentially impact the fire rating of the opening, and ASSA ABLOY makes no representations or warranties concerning what such impact may be in any specific situation. When retrofitting any portion of an existing fire-rated opening, or specifying and installing a new fire-rated opening, please consult with a code specialist or local code official (Authority Having Jurisdiction) to ensure compliance with all applicable codes and ratings.

80-9470-0250-000 04/24

1-855-557-5078 Ext. 2 • www.accentra-assaabloy.com

Copyright © 2013, 2023, 2024, ASSA ABLOY ACCENTRA™ Access and Egress Hardware Group, Inc. All rights reserved. Reproduction in whole or in part without the express written permission of ASSA ABLOY Access and Egress Hardware Group, Inc. is prohibited.

Experience a safer and more open world

ACCENTRA
ASSA ABLOY

7250M(F)(WS)

SquareBolt® Exit Device Series (Single Doors or Pairs with Mullion) Patent 5,605,362

Installation Instructions

Shim Kit Options

7250M Windstorm Kit: Model Number: 723NSWS Black Finish Kit consists of (3) Latch Head Shims (Device Cover seats on shims), (3) End Clamp Shims (End Cap seats on shims), and longer fasteners. **NOTE:** Shim Kit required for Windstorm application.

Raised Glass Kit: Model Number: 723NS Black Finish Kit consists of Latch Head Shim (Device Cover seats on shim) and End Clamp Shim (End Cap seats on shim).

More than two Shim Kits require longer device mounting screws (not included). Each shim is 1/8" (3.2) thick.

1/4-20 Sex Nut Option

Standard for Fire Rated Doors. Recommended for unreinforced metal doors and wood door applications. **NOTE:** Required on Windstorm application for Latch Head mounting.

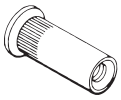

Specify Finish

Device	Quantity	Size	Part Number
No Trim	8	1/4-20	66-0001-1745
With Trim	6		
Fire Mullion (Add)	4	10-24	60-2000-1088

Maintenance

1. Periodically remove covers and coat mechanisms with a silicone base lubricant. This is particularly required in corrosive environments for proper product function.
2. Check mounting fasteners periodically. Retighten if found loose. Apply screw locking compound (available at automotive part stores) or change part fasteners if screws continue to back out.
3. Periodic checks and adjustments of rods mayb be required to compensate for changes in the opening (e.g.: door sagging, etc.).

Check Before Starting

Unreinforced Doors or Frames

Doors and Frames with walls having a structural thickness (metal skin plus reinforcement or solid hardwood) to engage less than (3) full screw threads are considered unreinforced.

Unreinforced Doors: Use SNB (sex nuts and bolts).

Unreinforced Frames: Use Blind Rivet Nuts.

Recommended fasteners for unreinforced openings are not necessarily supplied by ASSA ABLOY ACCENTRA..

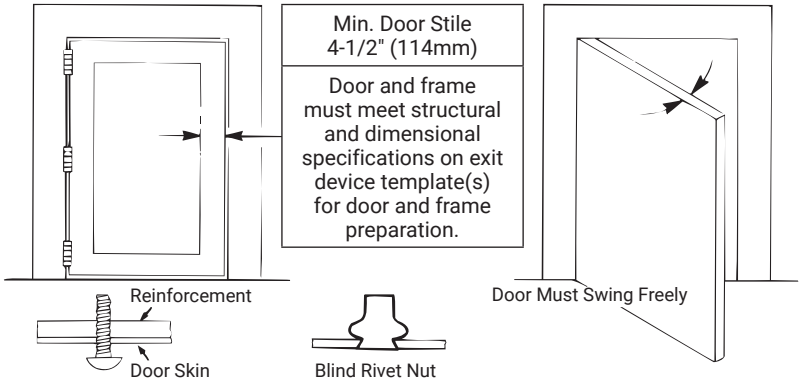

1. Mark Door

Locate and Mark Horizontal and Vertical Reference Centerlines as shown.

NOTE: For Pair without Mullion follow instructions packed with 793 Strike.

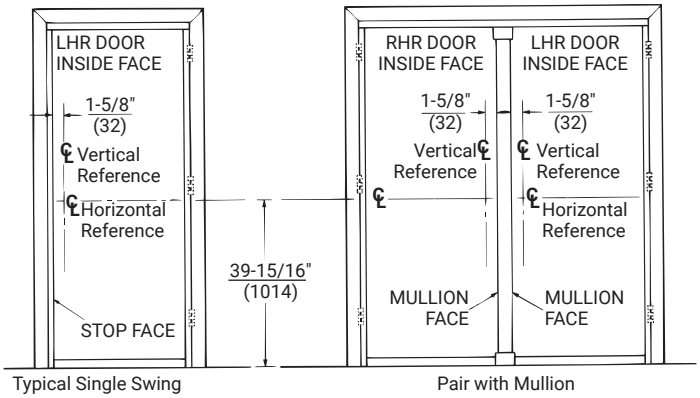

80-9470-0250-000 04/24

Experience a safer and more open world

1-855-557-5078 Ext. 2 • www.accentra-assaabloy.com

Copyright © 2013, 2023, 2024, ASSA ABLOY ACCENTRA™ Access and Egress Hardware Group, Inc. All rights reserved. Reproduction in whole or in part without the express written permission of ASSA ABLOY Access and Egress Hardware Group, Inc. is prohibited.

7250M(F)(WS)

SquareBolt® Exit Device Series (Single Doors or Pairs with Mullion) Patent 5,605,362

Installation Instructions

ACCENTRA
ASSA ABLOY

2. Prepare Door & Frame

1. Seat template on door and stop faces.
2. Align template with horizontal and vertical device centerline on door. Tape template in place.
3. Locate and tape Trim template on door. (See instructions packed with trim.)
4. Spot and prepare holes.
   a. **Device:** (2) 1/4-20 Machine Screws*, or (2) 3/8" (9.5) Dia Sex Nuts and Bolts.
   b. **Strike:** (2) 10-24 Machine Screws, or (2) #10 Wood Screws.

NOTE: (*)Metal reinforced doors only.

Caution: The use of Shims (i.e.; Raised Glass or Windstorm) requires shifting location of Strike away from the door. (See Door Marker Template for details).

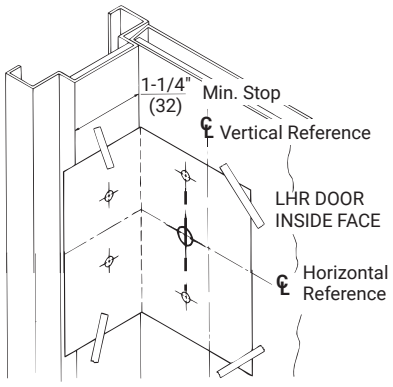

3. Size Device

Device must be field cut to size unless standard opening and device are 36" (0.91m).

LHR DOOR
INSIDE FACE

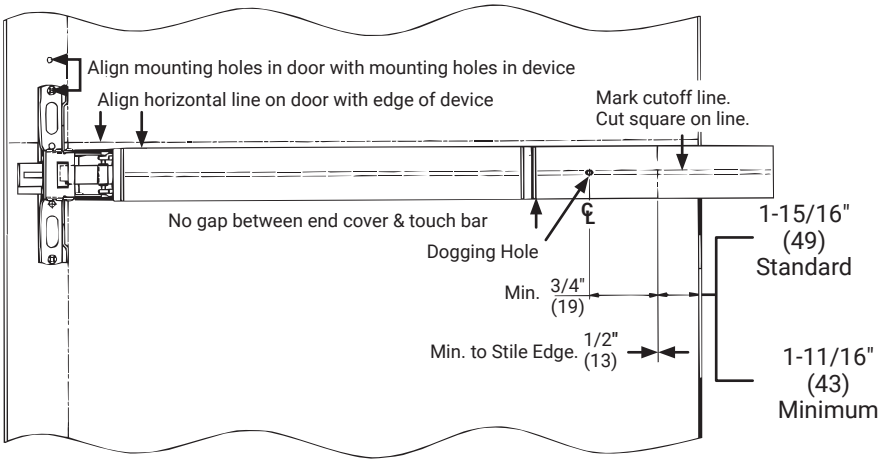

4. Clear Raised Door Molding

Device must seat flush on door surface or on shims that keep it parallel to door face.

(1) Shim Kit #723NS required for each 1/8" (3mm) of device lift needed. Longer device mounting screws needed when more than (2) shim kits are used. See Shim Kits Option on page 2.

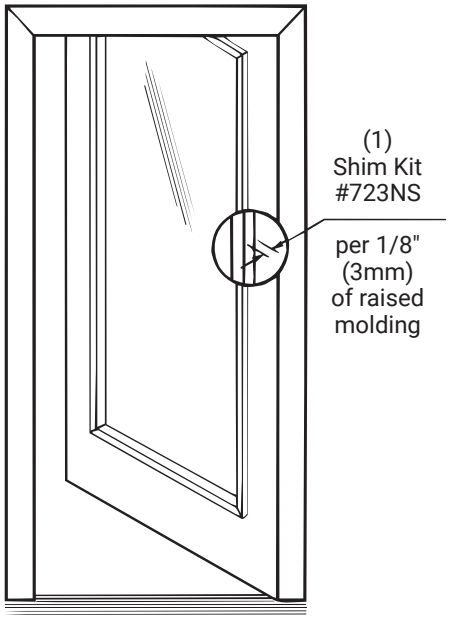

80-9470-0250-000 04/24

1-855-557-5078 Ext. 2 • www.accentra-assaabloy.com

Experience a safer and more open world

Copyright © 2013, 2023, 2024, ASSA ABLOY ACCENTRA™ Access and Egress Hardware Group, Inc. All rights reserved. Reproduction in whole or in part without the express written permission of ASSA ABLOY Access and Egress Hardware Group, Inc. is prohibited.

5. Install Device

1. Mount trim (follow instructions packed with trim).
2. Seat bar in place. Fasten device head (2 PRHMS or SNB).
3. Set bar level. Locate end clamp holes.
4. Prepare end clamp mounting holes. Mount end clamp. 2 #1/4-20 PRHMS or 3/8" (10) dia. SNB
5. Check bolt retraction.
   a. Depress touchbar (bolts must retract). Release touchbar (bolts must extend).
   b. Actuate trim (bolts mush retract). Release trim actuator (bolts must extend).
   c. (NOT FOR FIRE DEVICES). Depress touchbar, turn dogging key clockwise (bar must remain depressed, bolts must remain retracted). Turn dogging key counterclockwise (bar and bolts must return to extended position).

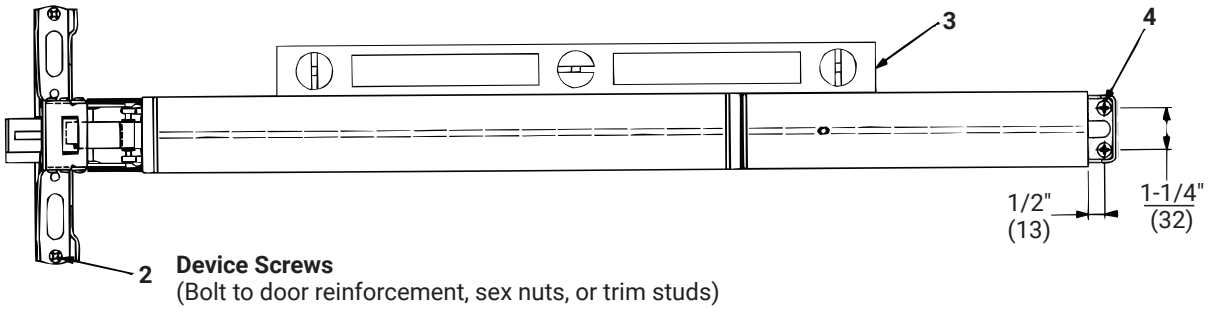

NOTE: When resulting operation is faulty, check first for visible binding or interference. If there is no apparent reason for the fault, remove item from the door and recheck its operation before assuming that it is defective.

6. Tighten all mounting screws.

6. Install Strike

1. Position strike projection (strike + locking plate + shims, if needed). See **Detail A**.
2. Position strike depth. See **Detail B**.
3. Fasten strike securely, as shown on **Detail C**.
4. Check bolt engagement.
   a. Bolt should retract to clear the strike, when actuated by bar, trim, or dogging action. Bolt should consistently reengage the strike, when actuators are released and the door shuts.
   b. Door should remain latched and not rattle when pushed, pulled, or shaken in/out.

Detail A

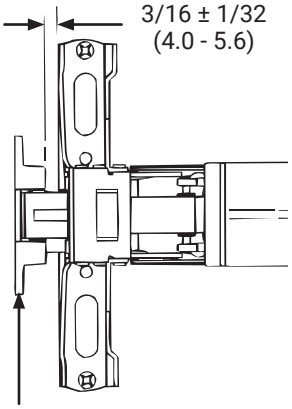

757(F)(WS) Strike
(Shim as required)

Detail B

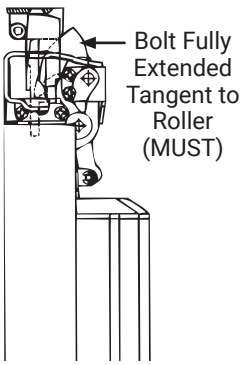

Detail C

(2) 10-24 x 3/4"
PFHMS

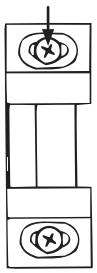

(757 Strike)

Copyright © 2013, 2023, 2024, ASSA ABLOY ACCENTRA™ Access and Egress Hardware Group, Inc. All rights reserved. Reproduction in whole or in part without the express written permission of ASSA ABLOY Access and Egress Hardware Group, Inc. is prohibited.

6. Install Strike Continued

1. Lock strike into place. For Fire application see **Detail E1**, for Windstorm application see **Detail E2**.
   a. Fire Strike Application: Spot and prepare (1) hole using the strike as a template and install strike center screw (1) 10-24 x 3/4" PFHMS.
   b. Windstorm Strike Application: Spot and prepare (2) holes using the strike as a template. Drill through the strike shims and locking plate (when required), then install (2) 10-24 x 1" PFHMS strike locking screws.
2. Install interlock bracket (Fire Mullion). See **Detail F**.
   a. Position strike interlock bracket in place, as shown. Locate bracket holes.
   b. Prepare interlock bracket mounting holes. mount interlock bracket using (43) 10-24 x 1" PFHMS or SNB).
   NOTE: Interlock bracket and screws supplied with fire mullion.
3. Install interlock bracket (Windstorm Device). See **Detail F**.
   a. Position strike interlock bracket in place, as shown. Locate bracket holes.
   b. Prepare interlock bracket mounting holes. Mount interlock bracket using (4) 10-24 x 1" FHMS or SNB).
   NOTE: Interlock bracket and screws supplied wtih Windstorm Product supercedes interlock bracket supplied wtih Fire Mullion (remove and discard when applicable).

Detail E1

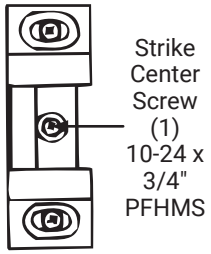

(757F Strike)

Detail E2

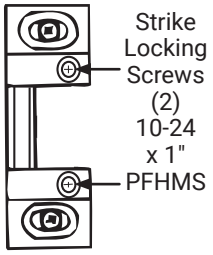

(757(F)WS Windstorm Strike)

Detail F

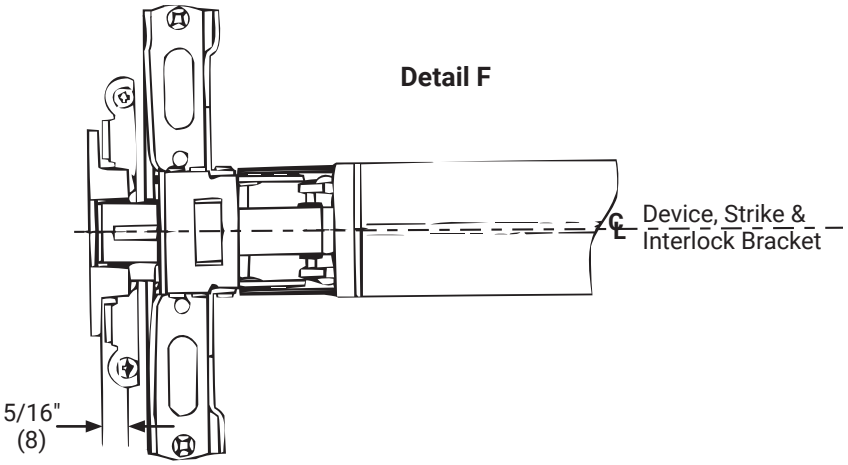

7. Install Cover & End Cap

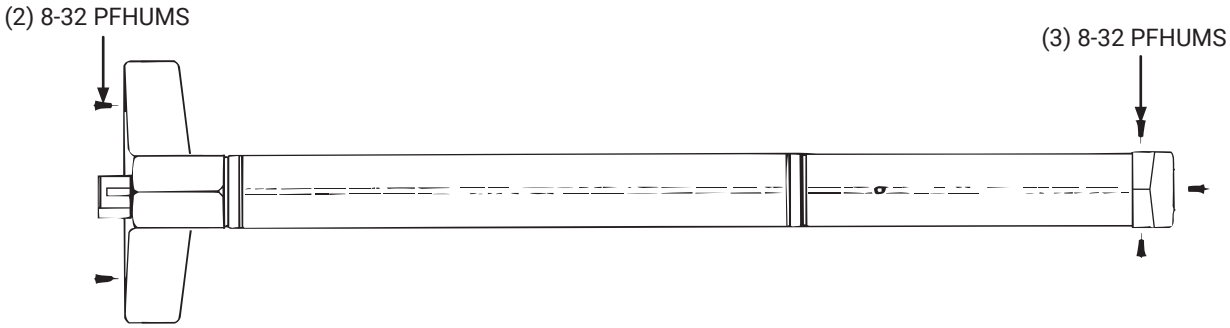

Copyright © 2013, 2023, 2024, ASSA ABLOY ACCENTRA™ Access and Egress Hardware Group, Inc. All rights reserved. Reproduction in whole or in part without the express written permission of ASSA ABLOY Access and Egress Hardware Group, Inc. is prohibited.

ACCENTRA
ASSA ABLOY

7250M(F)(WS)

SquareBolt® Exit Device Series (Single Doors or Pairs with Mullion) Patent 5,605,362

Installation Instructions

7250M(F)(WS) Series Square Bolt Exit Devices Template

Frame Stop or Mullion Face
(Strike Seat)

NOTES:

1. Unreinforced Frames require that 10-24 blind rivet nuts (by others) be used to bolt strike. Frames are considered not reinforced when strike mounting screws cannot engage (3) full threads.
2. Dimensions are given in inches (mm).
3. **CAUTION:** Office copiers, printers and facsimile machines may change the size of a drawing and make the template inaccurate to use as a door marker.

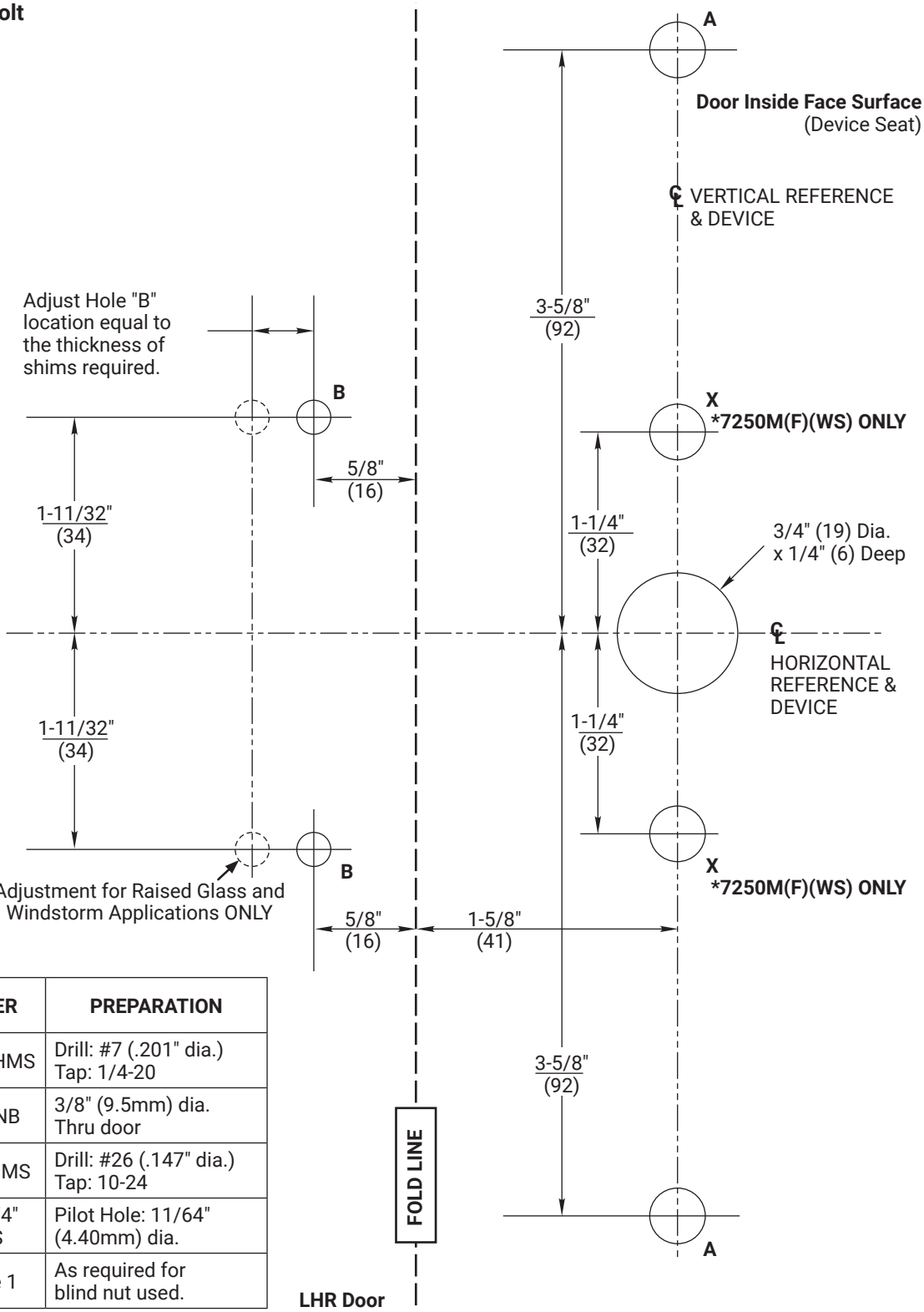

HOLE	DOOR/ FRAME	FASTENER	PREPARATION
A, X*	Metal Reinforced	1/4-20 PRHMS	Drill: #7 (.201" dia.) Tap: 1/4-20
	All Others	1/4-20 SNB	3/8" (9.5mm) dia. Thru door
B	Metal Reinforced	10-24 PFHMS	Drill: #26 (.147" dia.) Tap: 10-24
	Solid Hardwood	#10x1-1/4" PFHWS	Pilot Hole: 11/64" (4.40mm) dia.
	All Others	See Note 1	As required for blind nut used.

80-9470-0250-000 04/24

Experience a safer and more open world

1-855-557-5078 Ext. 2 • www.accentra-assaabloy.com

Copyright © 2013, 2023, 2024, ASSA ABLOY ACCENTRA™ Access and Egress Hardware Group, Inc. All rights reserved. Reproduction in whole or in part without the express written permission of ASSA ABLOY Access and Egress Hardware Group, Inc. is prohibited.

80-9470-0250-000 04/24

1-855-557-5078 Ext. 2 • www.accentra-assaabloy.com

Experience a safer and more open world

Copyright © 2013, 2023, 2024, ASSA ABLOY ACCENTRA™ Access and Egress Hardware Group, Inc. All rights reserved. Reproduction in whole or in part without the express written permission of ASSA ABLOY Access and Egress Hardware Group, Inc. is prohibited.

ACCENTRA
ASSA ABLOY

7250M(F)(WS)

SquareBolt® Exit Device Series (Single Doors or Pairs with Mullion) Patent 5,605,362

Installation Instructions

7250M(F)(WS) Series Square Bolt Exit Devices Template

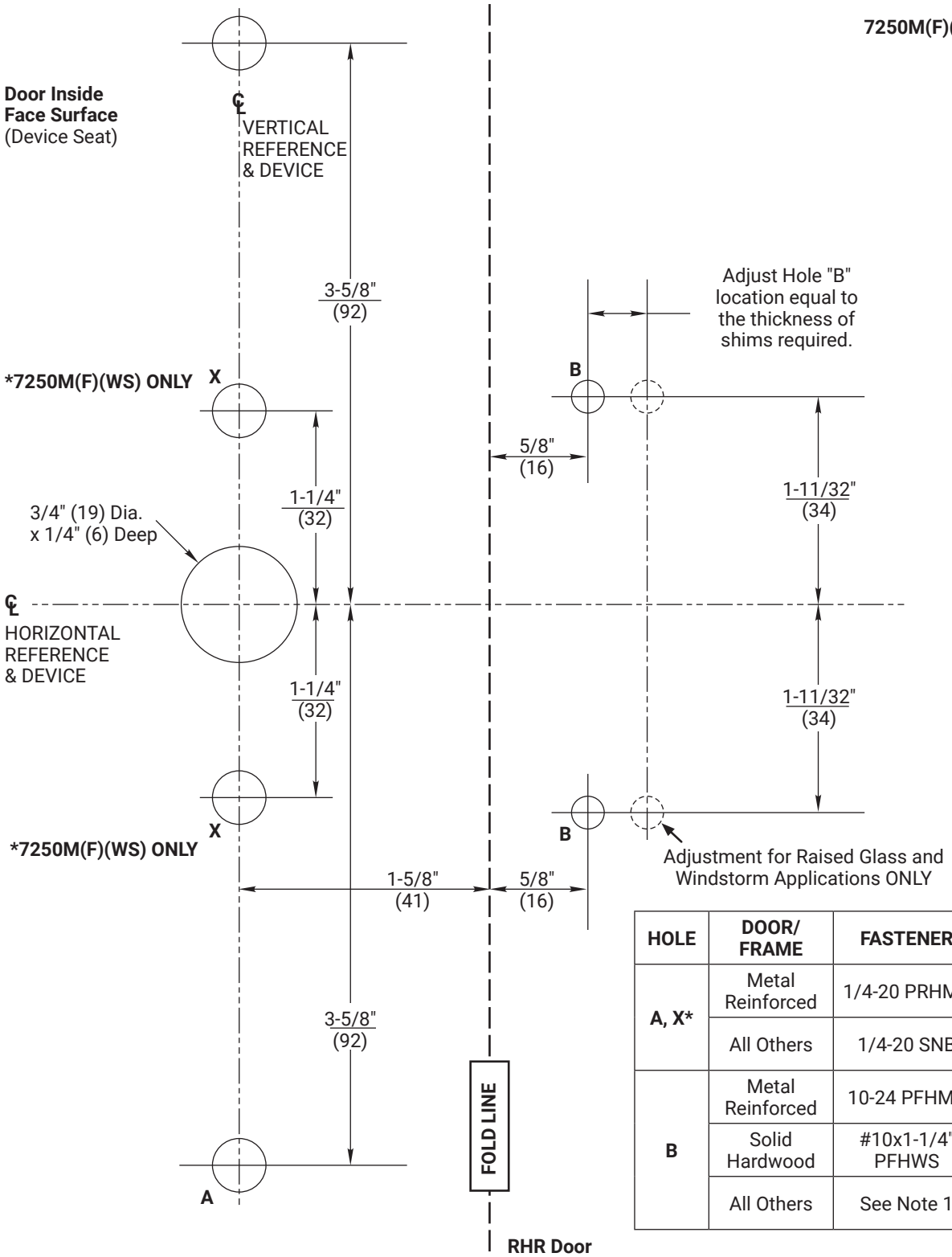

NOTES:

1. Unreinforced Frames require that 10-24 blind rivet nuts (by others) be used to bolt strike. Frames are considered not reinforced when strike mounting screws cannot engage (3) full threads.
2. Dimensions are given in inches (mm).
3. **CAUTION:** Office copiers, printers and facsimile machines may change the size of a drawing and make the template inaccurate to use as a door marker.

HOLE	DOOR/ FRAME	FASTENER	PREPARATION
A, X*	Metal Reinforced	1/4-20 PRHMS	Drill: #7 (.201" dia.) Tap: 1/4-20
	All Others	1/4-20 SNB	3/8" (9.5mm) dia. Thru door
B	Metal Reinforced	10-24 PFHMS	Drill: #26 (.147" dia.) Tap: 10-24
	Solid Hardwood	#10x1-1/4" PFHWS	Pilot Hole: 11/64" (4.40mm) dia.
	All Others	See Note 1	As required for blind nut used.

80-9470-0250-000 04/24

Experience a safer and more open world

1-855-557-5078 Ext. 2 • www.accentra-assaabloy.com

Copyright © 2013, 2023, 2024, ASSA ABLOY ACCENTRA™ Access and Egress Hardware Group, Inc. All rights reserved. Reproduction in whole or in part without the express written permission of ASSA ABLOY Access and Egress Hardware Group, Inc. is prohibited.

80-9470-0250-000 04/24

1-855-557-5078 Ext. 2 • www.accentra-assaabloy.com

Experience a safer and more open world

Copyright © 2013, 2023, 2024, ASSA ABLOY ACCENTRA™ Access and Egress Hardware Group, Inc. All rights reserved. Reproduction in whole or in part without the express written permission of ASSA ABLOY Access and Egress Hardware Group, Inc. is prohibited.

80-9470-0250-000 04/24

Copyright © 2013, 2023, 2024, ASSA ABLOY ACCENTRA™ Access and Egress Hardware Group, Inc. All rights reserved. Reproduction in whole or in part without the express written permission of ASSA ABLOY Access and Egress Hardware Group, Inc. is prohibited.

7250M(F)(WS)

SquareBolt® Exit Device Series (Single Doors or Pairs with Mullion) Patent 5,605,362

Installation Instructions

ACCENTRA
ASSA ABLOY

80-9470-0250-000 04/24

1-855-557-5078 Ext. 2 • www.accentra-assaabloy.com

Experience a safer and more open world

Copyright © 2013, 2023, 2024, ASSA ABLOY ACCENTRA™ Access and Egress Hardware Group, Inc. All rights reserved. Reproduction in whole or in part without the express written permission of ASSA ABLOY Access and Egress Hardware Group, Inc. is prohibited.

ACCENTRA
ASSA ABLOY

80-9470-0250-000 04/24

1-855-557-5078 Ext. 2 • www.accentra-assaabloy.com

Experience a safer
and more open world

Copyright © 2013, 2023, 2024, ASSA ABLOY ACCENTRA™ Access and Egress Hardware Group, Inc. All rights reserved. Reproduction in whole or in part without the express written permission of ASSA ABLOY Access and Egress Hardware Group, Inc. is prohibited.