Installation Instructions

SARGENT
ASSA ABLOY

PE8700 Series (Standard, 12-, HC-, & HC4-)

Surface Vertical Rod Exit Devices

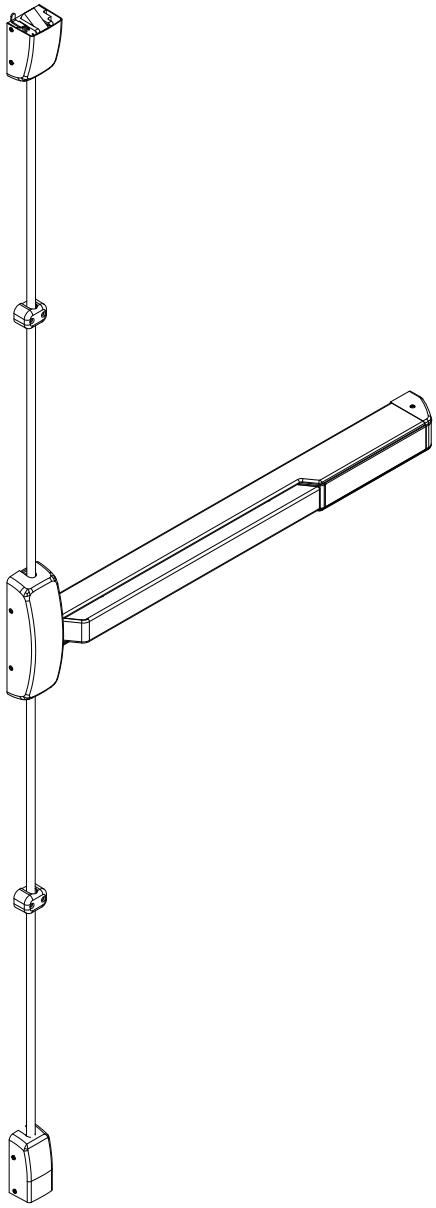

⚠ WARNING

This product can expose you to lead which is known to the state of California to cause cancer and birth defects or other reproductive harm. For more information go to www.P65warnings.ca.gov.

⚠ WARNING

Attention Installer: Improper installation may result in damage to the product and void the factory warranty.

1-800-727-5477 • www.sargentlock.com

Copyright © 2023, SARGENT Manufacturing Company. All rights reserved. Reproduction in whole or in part without the express written permission of SARGENT Manufacturing Company is prohibited. Patent pending and/or patent www.assaabloydss.com/patents.

A8307-1 5/23

Experience a safer and more open world

PE8700 Series (Standard, 12-, HC-, & HC4)

Surface Vertical Rod Exit Device

Installation Instructions

SARGENT
ASSA ABLOY

Screw Chart

DESCRIPTION	TOTAL QTY SUPPLIED	WHERE USED
#10-24 X 3/4" FLAT HEAD MACHINE SCREW	10 STANDARD 4 FIRE RATED, HC	(4) CHASSIS CORNER MOUNTING HOLES (METAL DOOR) (3) TOP CASE (STD.) (METAL DOOR) (3) BOTTOM CASE (STD.) (METAL DOOR)
#10 X 1-1/4" FLAT HEAD WOOD SCREW	10 STANDARD 8 FIRE RATED	(4) CHASSIS CORNER MOUNTING HOLES (WOOD DOOR) (3) TOP CASE (STD.) (WOOD DOOR) (2) TOP CASE (FIRE RATED) BOTTOM MOUNTING HOLES (WOOD DOOR) (3) BOTTOM CASE (STD.) (WOOD DOOR) (2) BOTTOM CASE (FIRE RATED) TOP MOUNTING HOLES (WOOD DOOR)
#10-24 X 3/4" ROUND HEAD MACHINE SCREW	2	(2) REAR MOUNTING PLATE (METAL DOOR)
#10 X 1-1/4" ROUND HEAD WOOD SCREW	2	(2) REAR MOUNTING PLATE (WOOD DOOR)
#12-24 X 3/4" ROUND HEAD MACHINE SCREW	4	(2) TOP CASE (HC) TOP MOUNTING HOLES (2) BOTTOM CASE (HC) BOTTOM MOUNTING HOLES
#12-24 X 3/4" FLAT HEAD MACHINE SCREW	8	(2) TOP CASE (HC) BOTTOM MOUNTING HOLES (2) BOTTOM CASE (HC) TOP MOUNTING HOLES (4) 654 TOP LATCH STRIKE
#10-24 X 3/4" OVAL HEAD MACHINE SCREW	6	(2) TOP CASE (FIRE RATED) BOTTOM MOUNTING HOLES (METAL DOOR) (2) BOTTOM CASE (FIRE RATED) TOP MOUNTING HOLES (METAL DOOR) (2) 648 TRANSOM STRIKE
#10-24 X 1-1/2" OVAL HEAD W/ GROMMET NUT MACHINE SCREW	2	(2) TOP CASE (FIRE RATED) TOP MOUNTING HOLES
#10-24 X 1-1/2" ROUND HEAD W/ GROMMET NUT MACHINE SCREW	2	(2) BOTTOM CASE (FIRE RATED) BOTTOM MOUNTING HOLES

1-800-727-5477 • www.sargentlock.com

Copyright © 2023, SARGENT Manufacturing Company. All rights reserved. Reproduction in whole or in part without the express written permission of SARGENT Manufacturing Company is prohibited. Patent pending and/or patent www.assaabloydss.com/patents.

Experience a safer and more open world

Screw Chart

DESCRIPTION	TOTAL QTY SUPPLIED	WHERE USED
#12-24 X 1" FLAT HEAD MACHINE SCREW	2	(2) 646 TOP STRIKE (METAL FRAME)
#12 X 1-1/2" FLAT HEAD WOOD SCREW	2	(2) 646 TOP STRIKE (WOOD FRAME)
#10 X 1-1/4" OVAL HEAD WOOD SCREW	2	(2) 648 TRANSOM STRIKE (WOOD FRAME)
#10-24 X 3/4" FLAT HEAD MACHINE SCREW WITH CAULKING ANCHOR	2	(2) 624 BOTTOM STRIKE
#12 X 1" FLAT HEAD WOOD SCREW	2	(2) 624 BOTTOM STRIKE (WOOD FRAME)
1/4"-20 X 2" FLAT HEAD MACHINE SCREW W/ANCHOR	2 (3)	(3) 653 BOTTOM STRIKE (2) 655 BOTTOM STRIKE
#10-24 X 1-1/2" OVAL HEAD MACHINE SCREW	4	(2) TOP ROD GUIDE (METAL DOOR) (2) BOTTOM ROD GUIDE (METAL DOOR)
#10 X 1-3/4" OVAL HEAD WOOD SCREW	4	(2) TOP ROD GUIDE (WOOD DOOR) (2) BOTTOM ROD GUIDE (WOOD DOOR)
#8-32 X 5/16" W/ #6 OVAL HEAD MACHINE SCREW	14	(4) CHASSIS COVER (2) END CAP (4) TOP CASE COVER (4) BOTTOM CASE COVER
1/4"-20 X 2-3/8" KNURLED FLAT HEAD MACHINE SCREW	2	(2) EXIT TRIM (IF USED)

Copyright © 2023, SARGENT Manufacturing Company. All rights reserved. Reproduction in whole or in part without the express written permission of SARGENT Manufacturing Company is prohibited. Patent pending and/or patent www.assaabloydss.com/patents.

PE8700 Series (Standard, 12-, HC-, & HC4)

Surface Vertical Rod Exit Device

Installation Instructions

SARGENT
ASSA ABLOY

Tools Needed

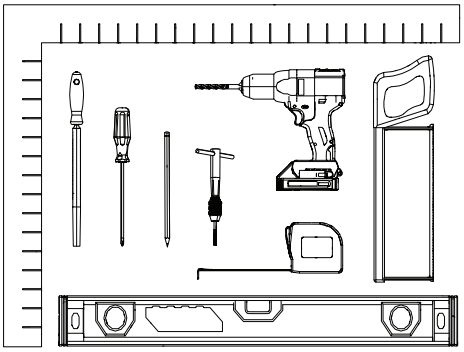

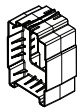

Support Block (Provided)

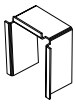

Rail Cutting Guide (Provided)

Handing

All PE8700 series devices are handed, except for the PE8710, which is field reversible. The PE8710 is shipped as LHR, unless ordered as RHR

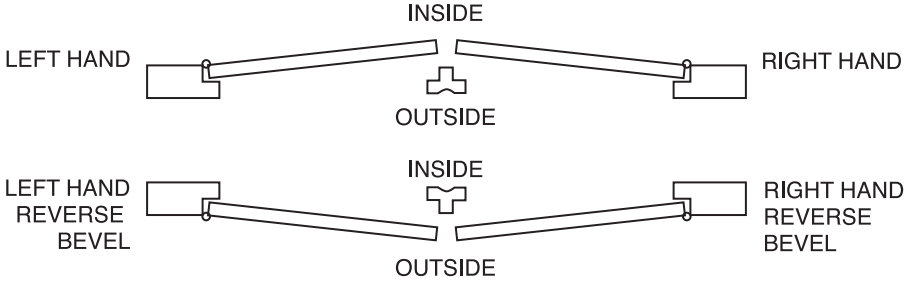

DOOR HANDS DETERMINED FROM OUTSIDE OF DOOR OR SECURED SIDE

To Change Hand of PE8710 Exit Device:

1. Remove both chassis pins and main slide.
2. Remove lift lever pin and lift lever.
3. Rotate chassis 180° and reposition lift lever and lift lever pin as shown below
4. Position main slide with large end of main slide at the bottom and retain with chassis pins.

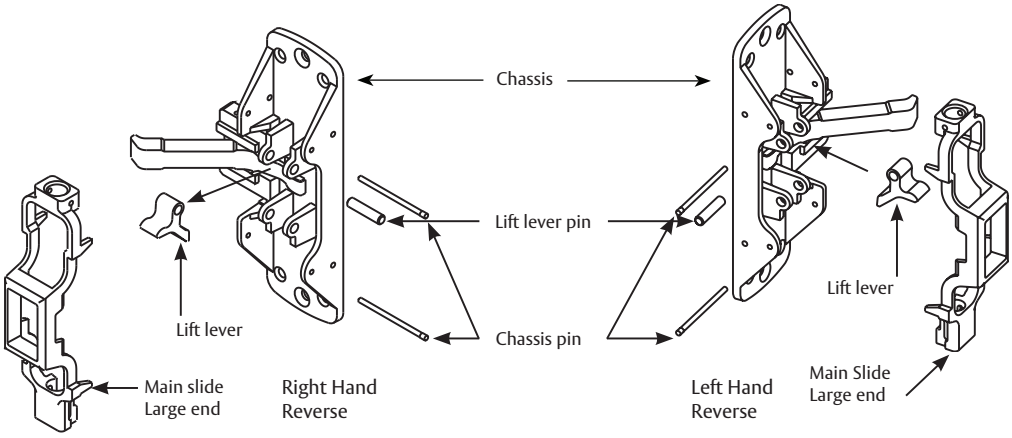

Copyright © 2023, SARGENT Manufacturing Company. All rights reserved. Reproduction in whole or in part without the express written permission of SARGENT Manufacturing Company is prohibited. Patent pending and/or patent www.assaabloydss.com/patents.

PE8700 Series (Standard, 12-, HC-, & HC4)

Surface Vertical Rod Exit Device

Installation Instructions

SARGENT
ASSA ABLOY

Product Overview

Standard PE8700 Exit Shown

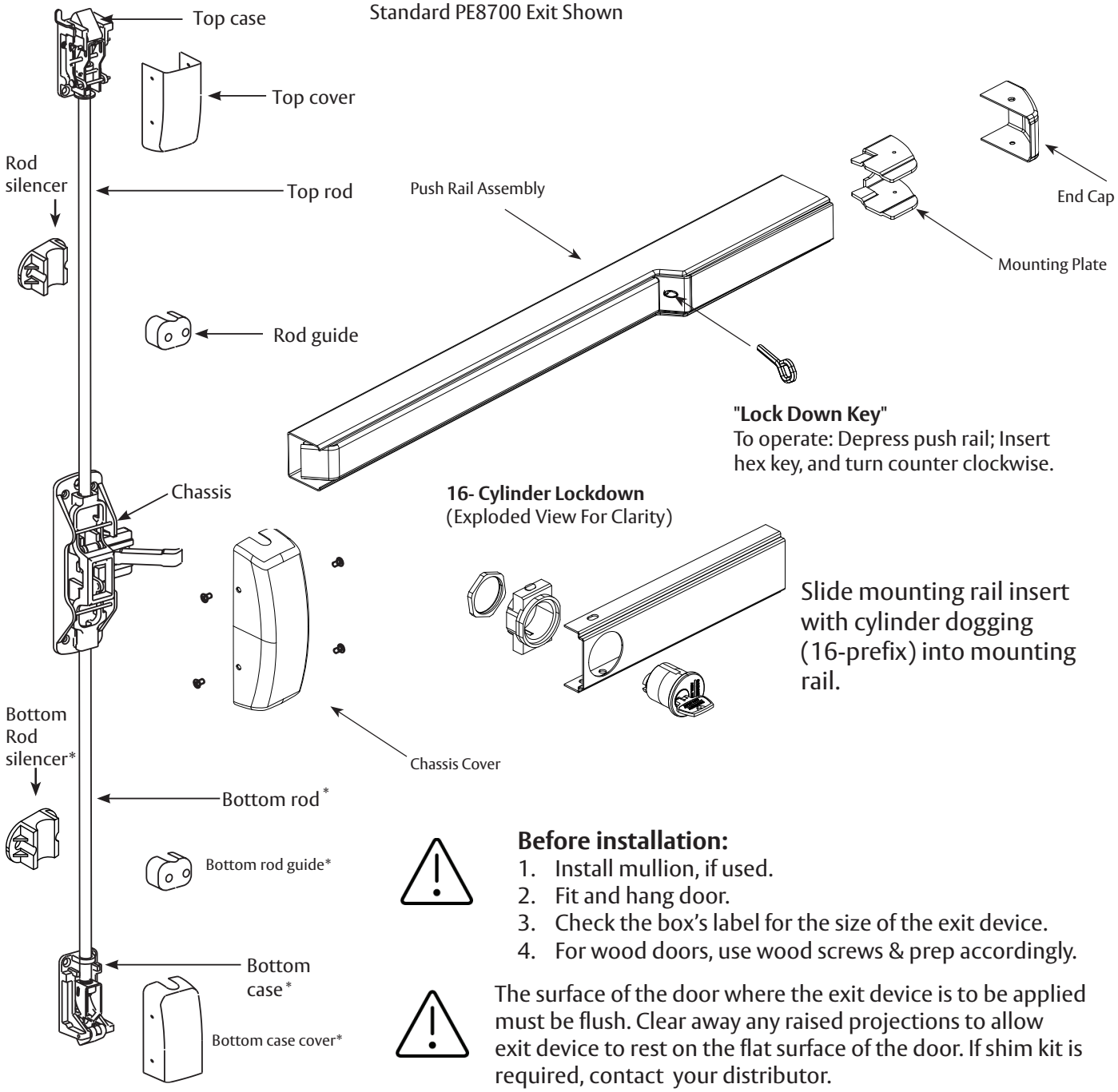

Slide mounting rail insert with cylinder dogging (16-prefix) into mounting rail.

*Not included with NB- option.

Before installation:

1. Install mullion, if used.
2. Fit and hang door.
3. Check the box's label for the size of the exit device.
4. For wood doors, use wood screws & prep accordingly.

The surface of the door where the exit device is to be applied must be flush. Clear away any raised projections to allow exit device to rest on the flat surface of the door. If shim kit is required, contact your distributor.

Note: Please refer to trim and other installation instructions provided in the box.

1-800-727-5477 • www.sargentlock.com

Copyright © 2023, SARGENT Manufacturing Company. All rights reserved. Reproduction in whole or in part without the express written permission of SARGENT Manufacturing Company is prohibited. Patent pending and/or patent www.assaabloydss.com/patents.

Experience a safer and more open world

PE8700 Series (Standard, 12-, HC-, & HC4)

Surface Vertical Rod Exit Device

Installation Instructions

SARGENT
ASSA ABLOY

1

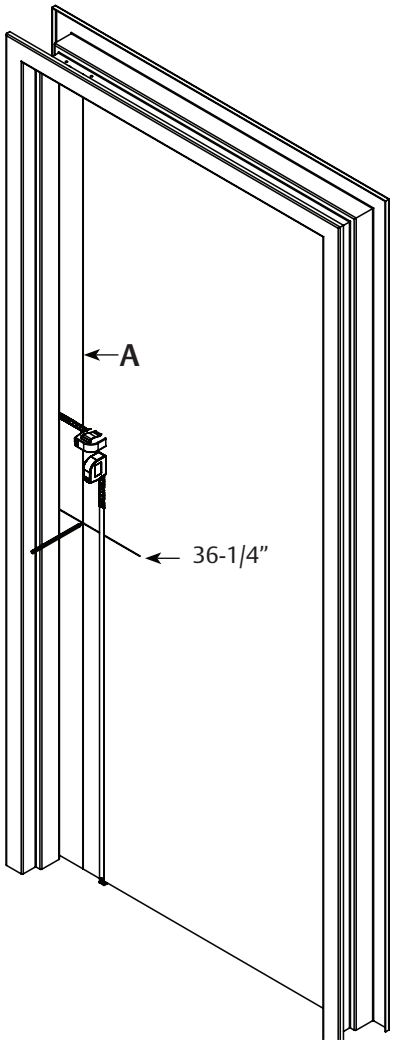

- With door closed, determine dimension “A” to located vertical reference line.
- If door stile is 4-1/2” wide or wider, “A” is 2-3/4”. If door stile is less than 4-1/2”, “A” is 1/2 the exposed width of the door stile when the door is closed against the door stop.
- Standard rail centerline height is 39-5/8” above the finished floor.
- Horizontal reference line is 36-1/4” standard. (Location of lower chassis mounting holes.)

2

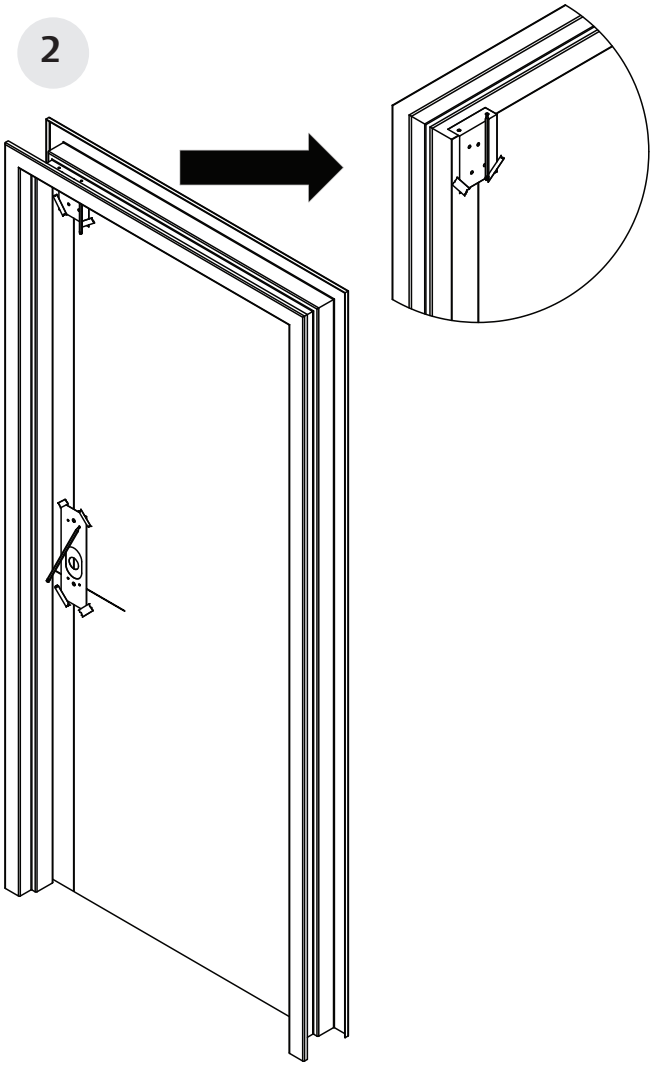

- With door closed, tape template for chassis/ trim on inside of door, along vertical and horizontal reference lines.
- Fold top case template and tape on inside of door along vertical reference lines.

Copyright © 2023, SARGENT Manufacturing Company. All rights reserved. Reproduction in whole or in part without the express written permission of SARGENT Manufacturing Company is prohibited. Patent pending and/or patent www.assaabloydss.com/patents.

3

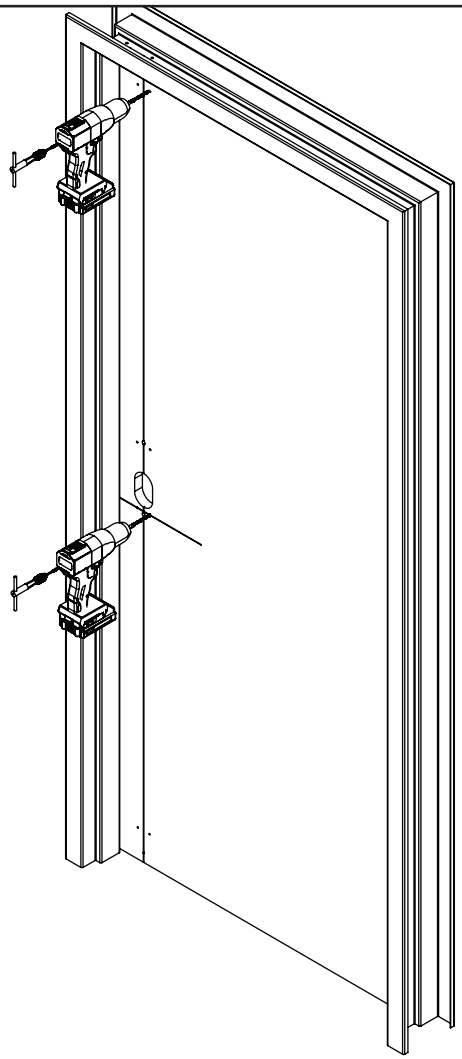

- Drill and tap all holes #10-24 from inside of door, for chassis and top case.
- Mortise pockets for outside trim, if required. See installation instructions supplied with trim for details.

NOTE: Any holes drilled from the outside need pilot holes drilled from the inside to ensure good alignment.

NOTE: For electrical trim applications, ensure access to a raceway from the trim to the electric hinge or armored door loop.

4

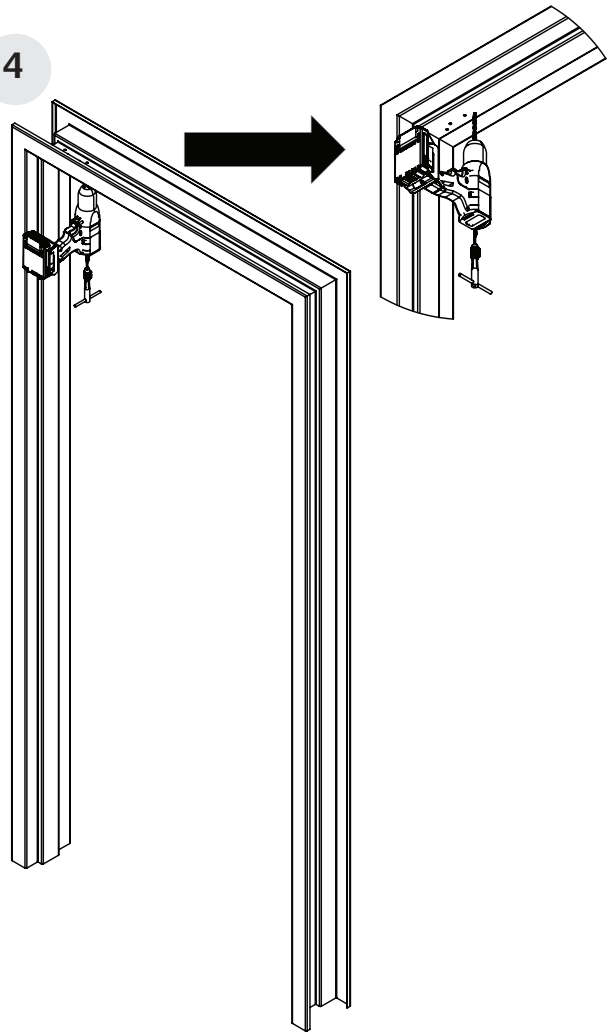

- Drill and tap all strike mounting holes for #12-24 in locations for applicable strike.

Copyright © 2023, SARGENT Manufacturing Company. All rights reserved. Reproduction in whole or in part without the express written permission of SARGENT Manufacturing Company is prohibited. Patent pending and/or patent www.assaabloydss.com/patents.

5

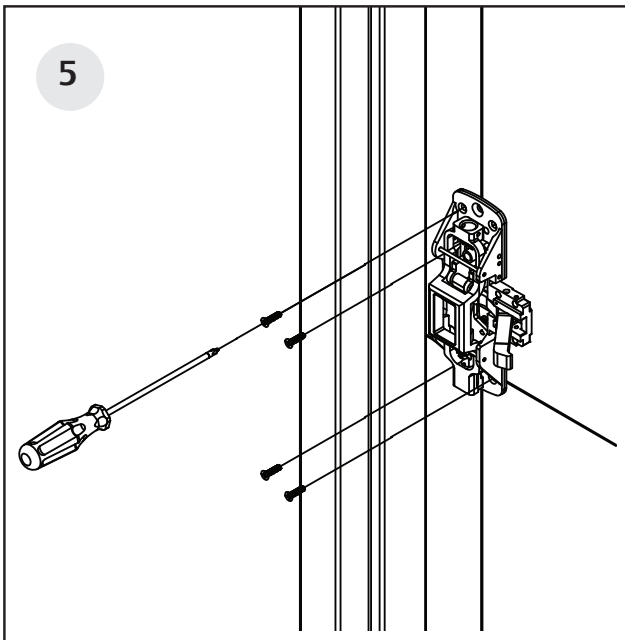

Install chassis mounting screws. **DO NOT FULLY TIGHTEN**. See steps 5a and5b for trim mounting.

5a P700 NE & P700 WE Series ET Trim

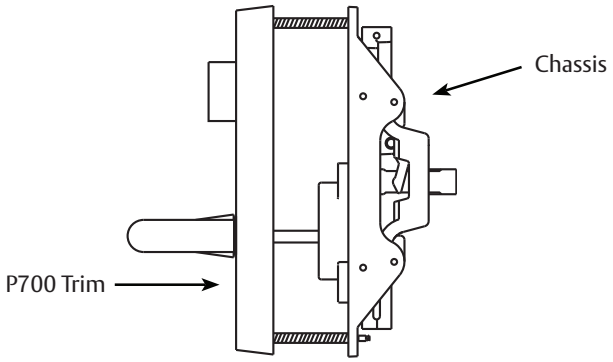

Position ET trim on door. Align spindle with bell housing. Thru-bolt chassis to ET trim with (2) 1/4-20 flat head screws.

5b Thumb Piece Trim

Determining rim cylinder tail length.

For FLL, FLW, MAL, STS or PTB Trim:

1. Position trim on door (except STS).
2. Insert rim cylinder through trim plate (or cylinder collar for STS trim).
3. Mark cylinder tail at 5/16” beyond inside door surface.
4. Remove cylinder and trim from door and cut tail piece as marked.

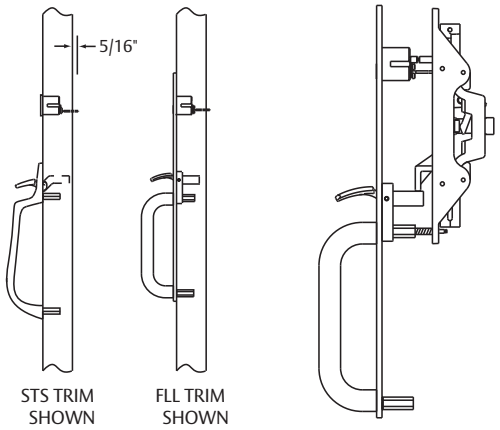

NOTE: Thumb Trim is not available for HC-PE8700 Series Exit Devices.

Copyright © 2023, SARGENT Manufacturing Company. All rights reserved. Reproduction in whole or in part without the express written permission of SARGENT Manufacturing Company is prohibited. Patent pending and/or patent www.assaabloydss.com/patents.

5b Thumb Piece Trim, Continued

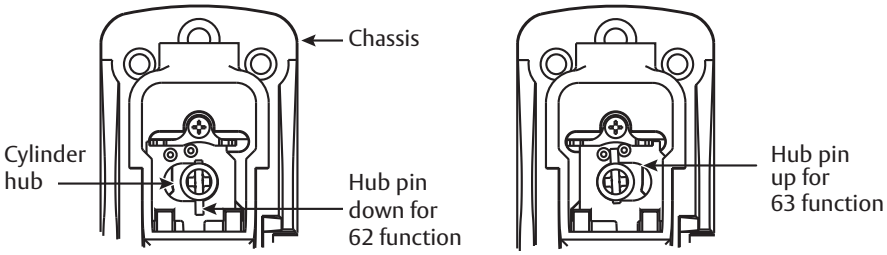

For PE8762 long end of pin faces down. Cylinder turns 180° in both directions.

For PE8763 long end of pin faces up. Cylinder turns 360° to the left or right.

Mounting Trim

1. Hold trim plate to door.
2. Insert cylinder and secure using supplied back plate.
3. Position cylinder hub within the chassis to correct position for desired function (see above).
4. Position chassis on door, align cylinder tail with hub and secure chassis to door with (4) #10 flat head screws using the corner mounting holes. **DO NOT FULLY TIGHTEN.**

NOTE: STS, FLL, FLW and MAL thru-bolt to chassis with (1) 1/4-20 flat head screw. PTB trim thru-bolts to chassis with (2) 1/4-20 flat head screws. **DO NOT FULLY TIGHTEN.**

Copyright © 2023, SARGENT Manufacturing Company. All rights reserved. Reproduction in whole or in part without the express written permission of SARGENT Manufacturing Company is prohibited. Patent pending and/or patent www.assaabloydss.com/patents.

Rail cutting guide

If the rail doesn't need to be cut, continue to page 12, step 7.
If the rail must be cut, follow these steps on page 10 and 11:

Refer to the individual exit device installation instructions for rail cutting requirements / restrictions. Instructions will vary based on device type and options.

- Determine cut off dimension "X" by subtracting 2-7/8" from dimension "Y". Mark cut off point on mounting rail. (See below.)

⚠ Do not cut closer than 1-5/8" from the the front edge of the rail insert.

Information for Cutting Rails		
Rail Sizes	Door Widths	
	Max	Min
E	32"	24"
F	36"	33"
J	42"	37"
G	48"	43"

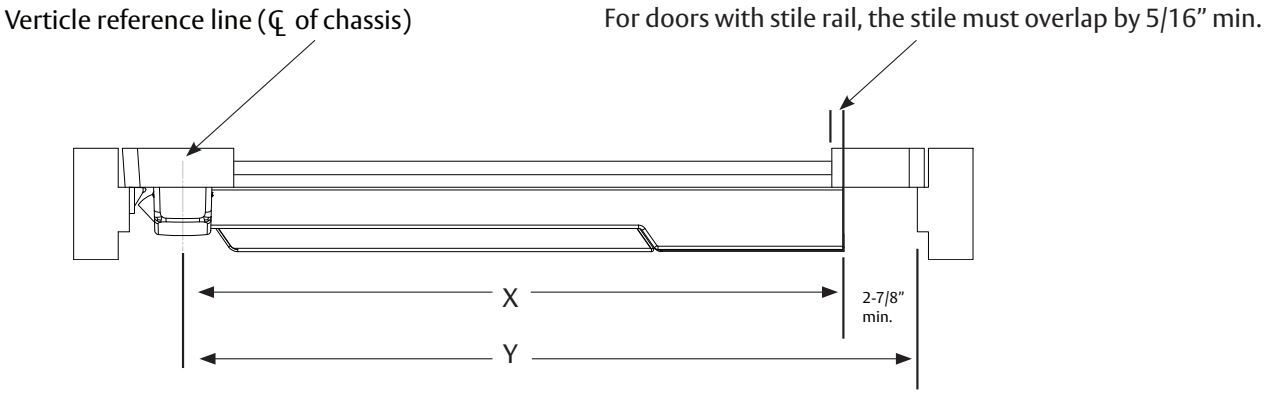

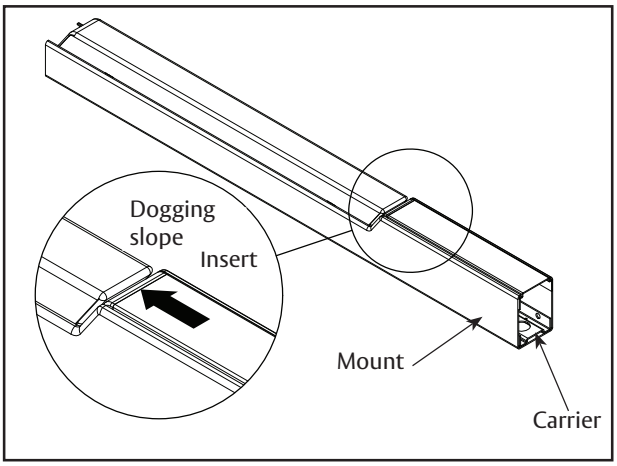

A. Ensure there isn't a gap between the insert and the dogging slope, and the carrier is flush with the mount.

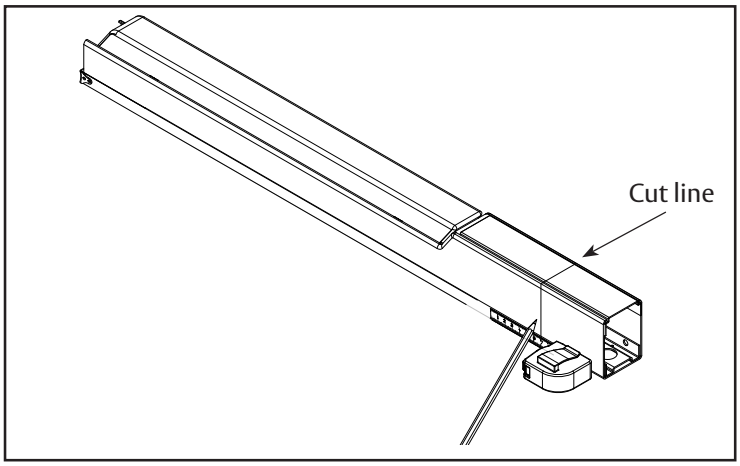

B. Mark rail at the required cut length.

Copyright © 2023, SARGENT Manufacturing Company. All rights reserved. Reproduction in whole or in part without the express written permission of SARGENT Manufacturing Company is prohibited. Patent pending and/or patent www.assaabloydss.com/patents.

Rail cutting guide, continued.

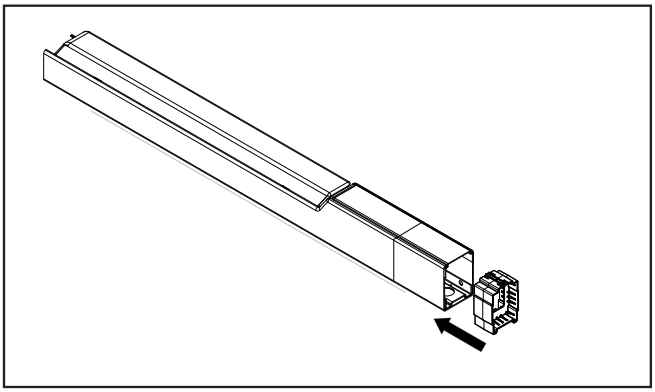

C. Ensure plastic insert support is installed under the cut line.

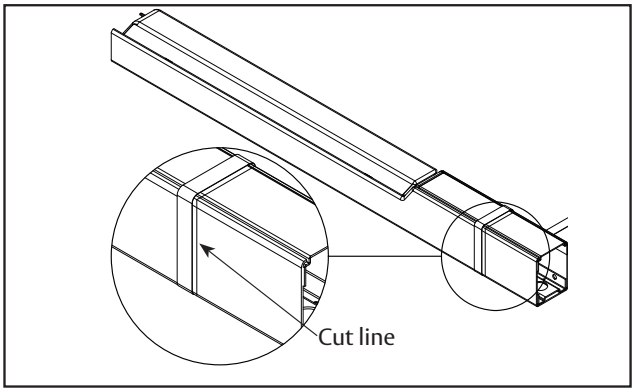

D. Wrap the rail and insert in masking tape, as shown.

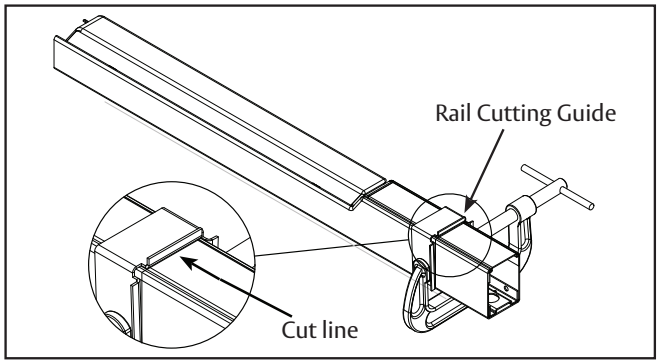

E. Place the rail cutting guide over the masking tape and align it with the cut line. Clamp the cut guide to the rail using a C-clamp.

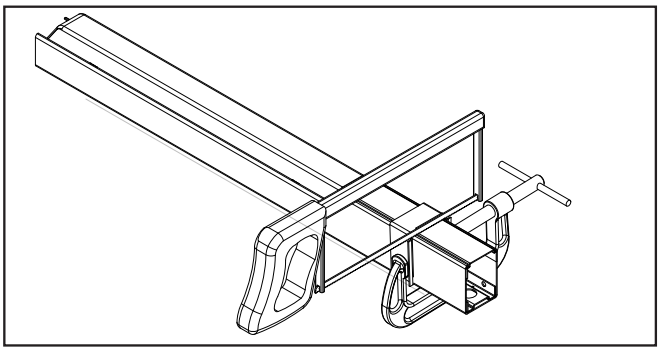

F. Using a hack saw with a new blade or a chop saw with a metal cutting blade, cut the rail, ensuring that the blade stays pressed against the rail cutting guide.

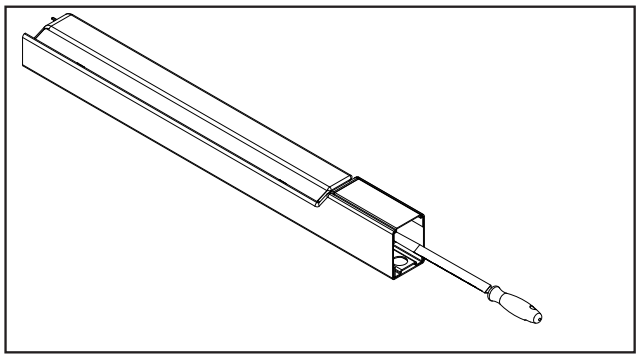

G. Deburr and smooth all cut edges with a file.

Copyright © 2023, SARGENT Manufacturing Company. All rights reserved. Reproduction in whole or in part without the express written permission of SARGENT Manufacturing Company is prohibited. Patent pending and/or patent www.assaabloydss.com/patents.

7

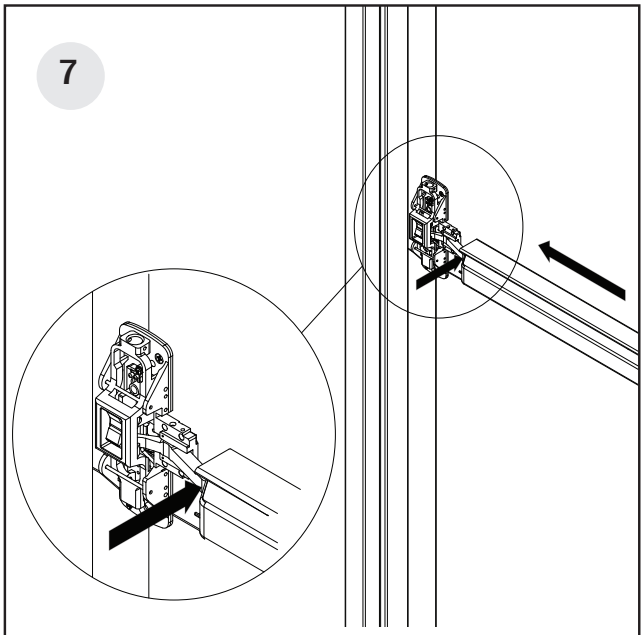

Depress chassis lift arm, and slide rail assemby onto chassis.

8

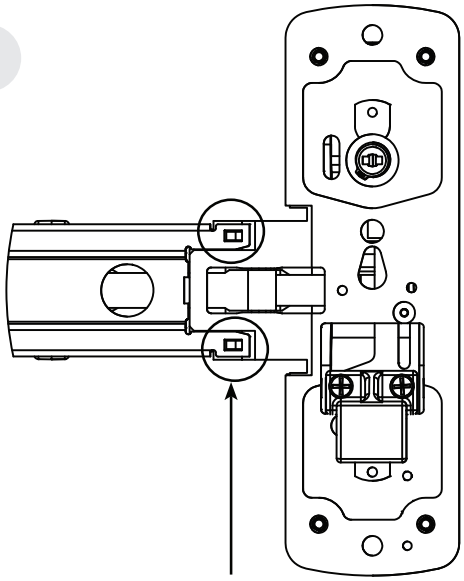

Ensure rail carrier tabs are aligned with chassis.

9

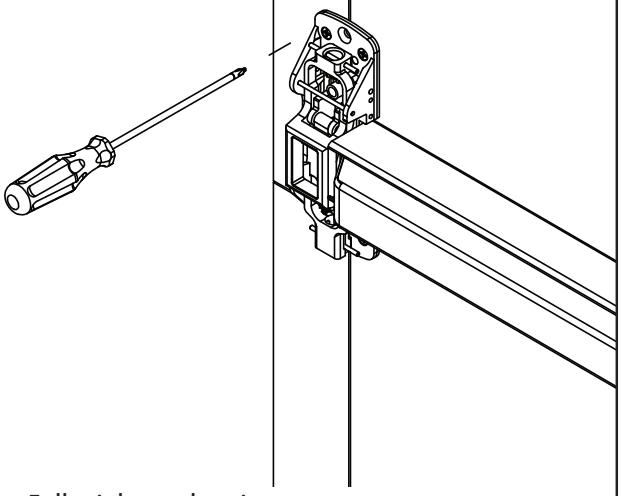

Fully tighten chassis screws.

10

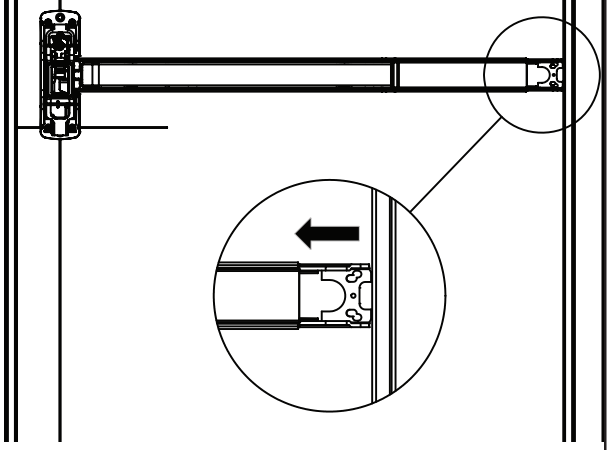

Insert the end cap bracket into the rail assembly.

Copyright © 2023, SARGENT Manufacturing Company. All rights reserved. Reproduction in whole or in part without the express written permission of SARGENT Manufacturing Company is prohibited. Patent pending and/or patent www.assaabloydss.com/patents.

11

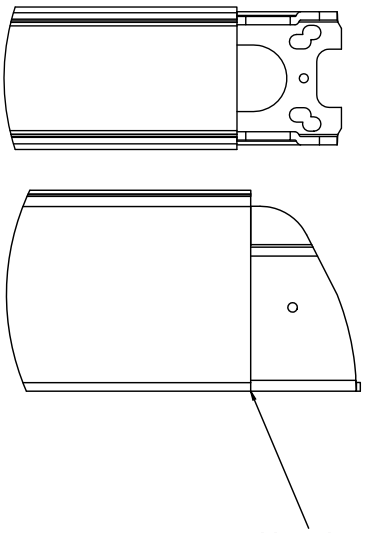

Ensure mounting rail bracket is against the rail without a gap.

12

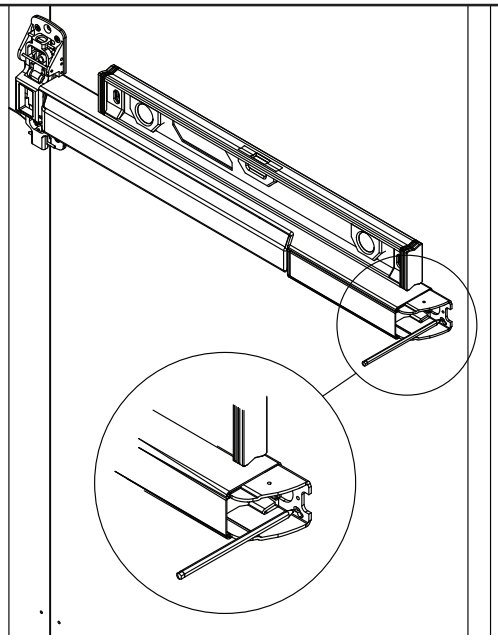

Level the rail and mark mounting holes, using the bracket as a guide.

13

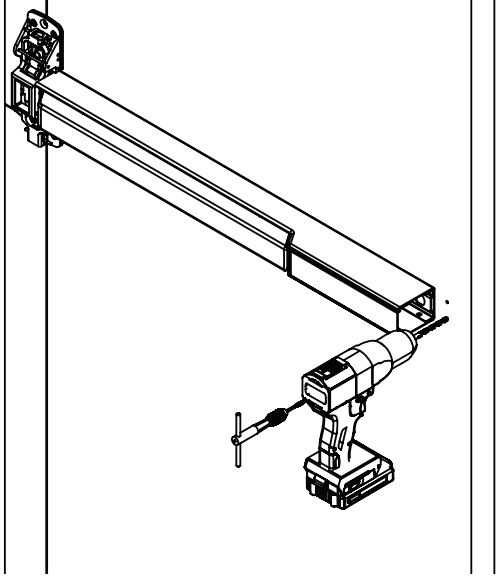

Drill and tap end cap bracket holes #10-24 (2 Places).

14

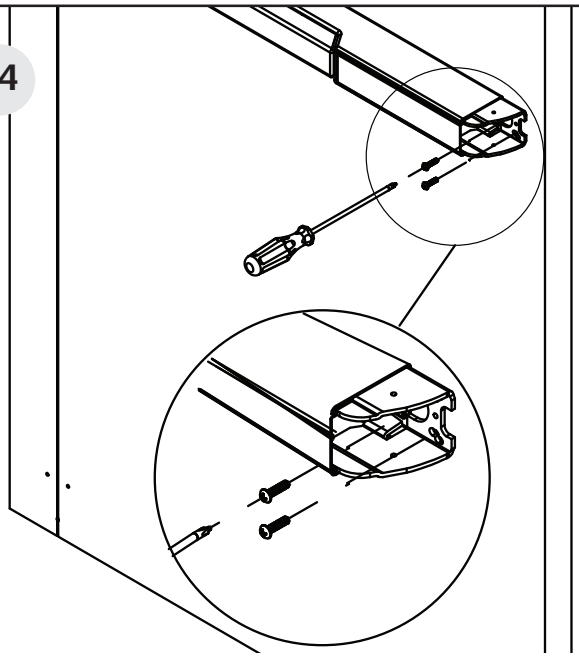

Install end cap bracket using round head phillips #10-24 x 1” screws, supplied.

Copyright © 2023, SARGENT Manufacturing Company. All rights reserved. Reproduction in whole or in part without the express written permission of SARGENT Manufacturing Company is prohibited. Patent pending and/or patent www.assaabloydss.com/patents.

15

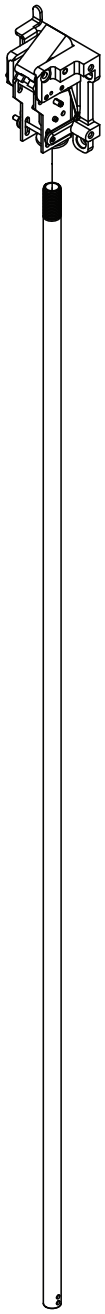

Screw top rod into top case until finger tight.

16

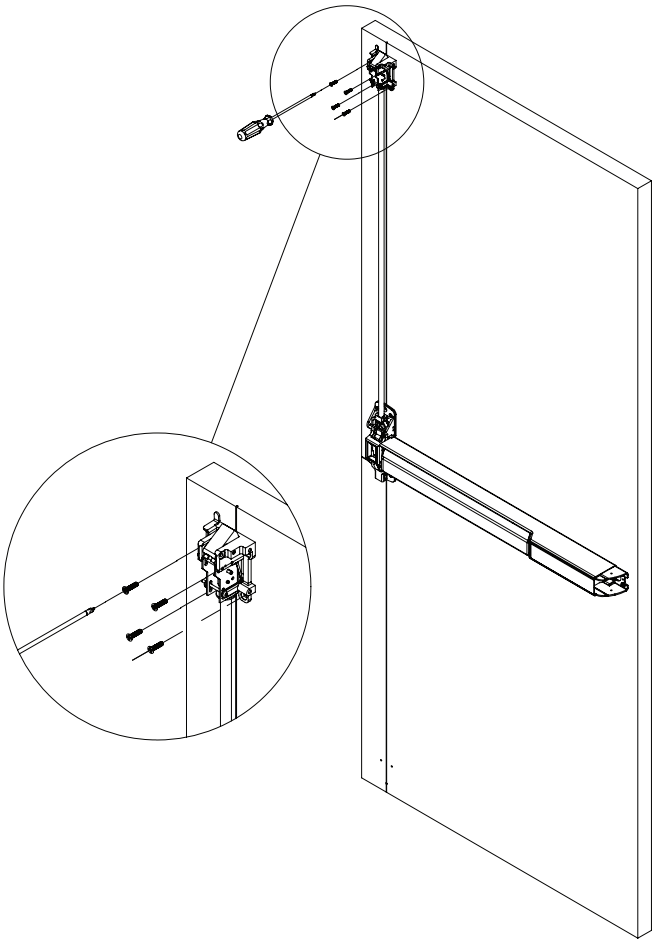

Slide top rod into chassis main slide. Do not pin in place. Attach top case.

Note: Top cases on fire rated wood doors must be thru-bolted.

Copyright © 2023, SARGENT Manufacturing Company. All rights reserved. Reproduction in whole or in part without the express written permission of SARGENT Manufacturing Company is prohibited. Patent pending and/or patent www.assaabloydss.com/patents.

17

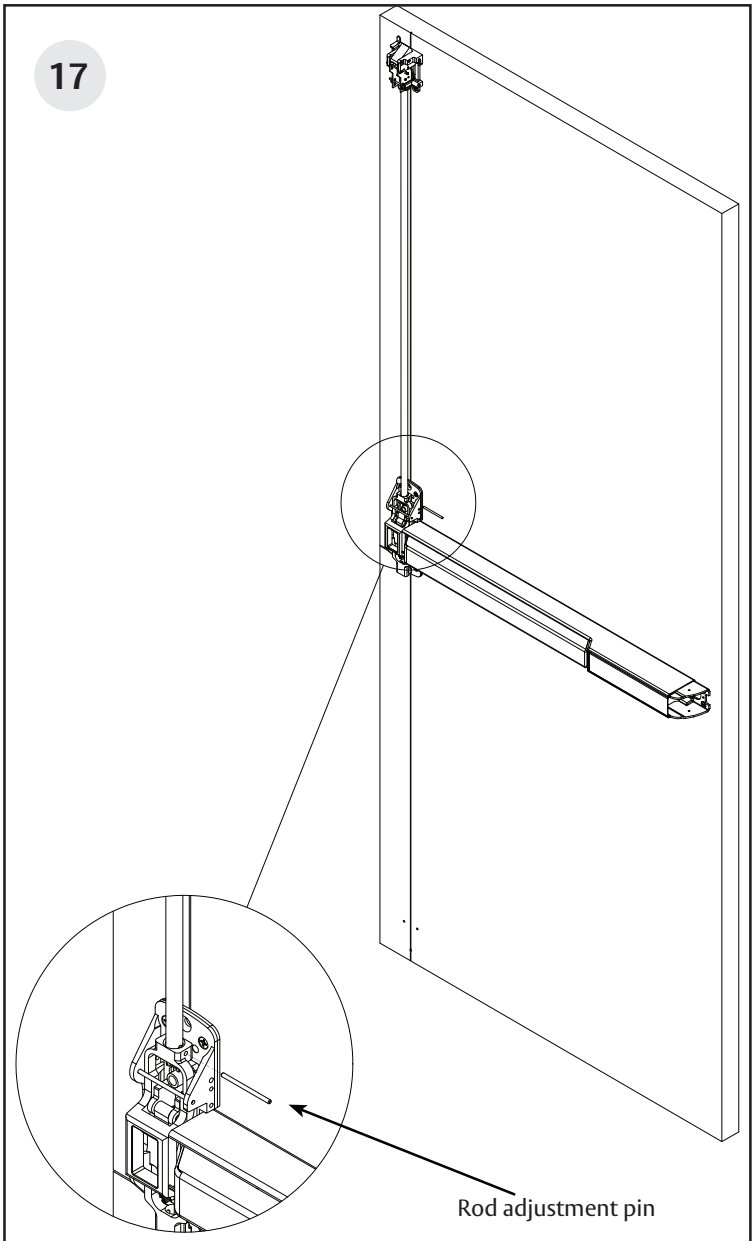

- Verify rail is not dogged (locked down).
- Unscrew top rod until the center hole is aligned with the hole in the main slide.
- Insert rod adjustment pin and align hole in rod with pin.

18

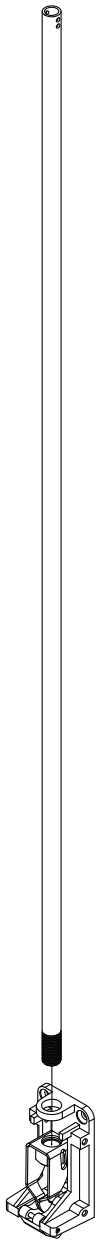

Screw bottom rod into bottom case until finger tight.

Copyright © 2023, SARGENT Manufacturing Company. All rights reserved. Reproduction in whole or in part without the express written permission of SARGENT Manufacturing Company is prohibited. Patent pending and/or patent www.assaabloydss.com/patents.

19

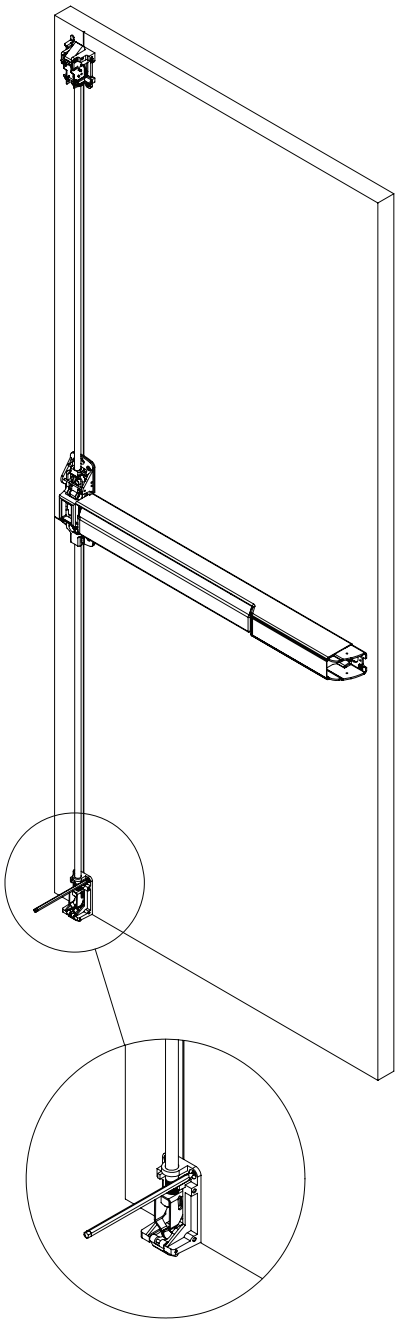

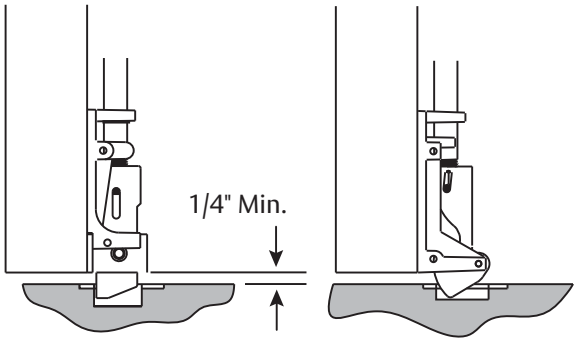

MORTISE APPLIED STRIKES

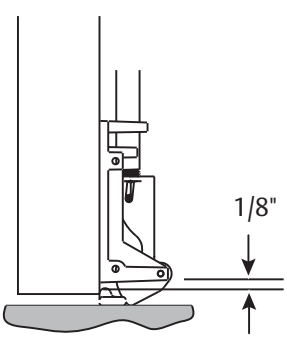

SURFACE APPLIED STRIKES

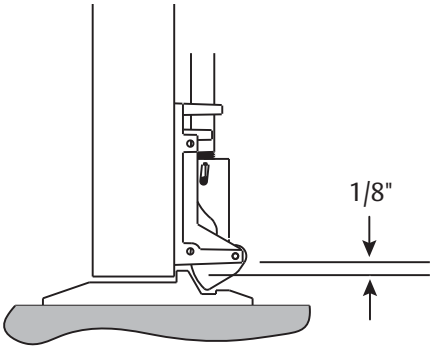

LATCH TRACK THRESHOLD (BY OTHERS)

- Slide bottom rod into the chassis main slide.
- Mark bottom case mounting holes based on the bottom case placement shown in image above.

Copyright © 2023, SARGENT Manufacturing Company. All rights reserved. Reproduction in whole or in part without the express written permission of SARGENT Manufacturing Company is prohibited. Patent pending and/or patent www.assaabloydss.com/patents.

20

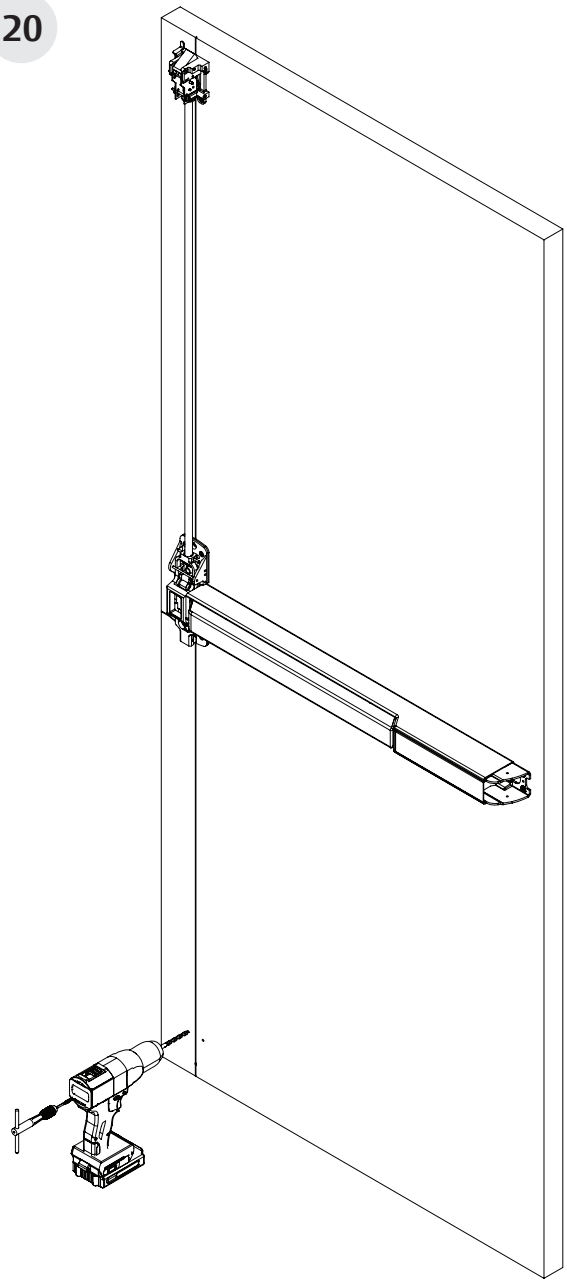

Drill and tap bottom case mounting holes for the required fasteners.

21

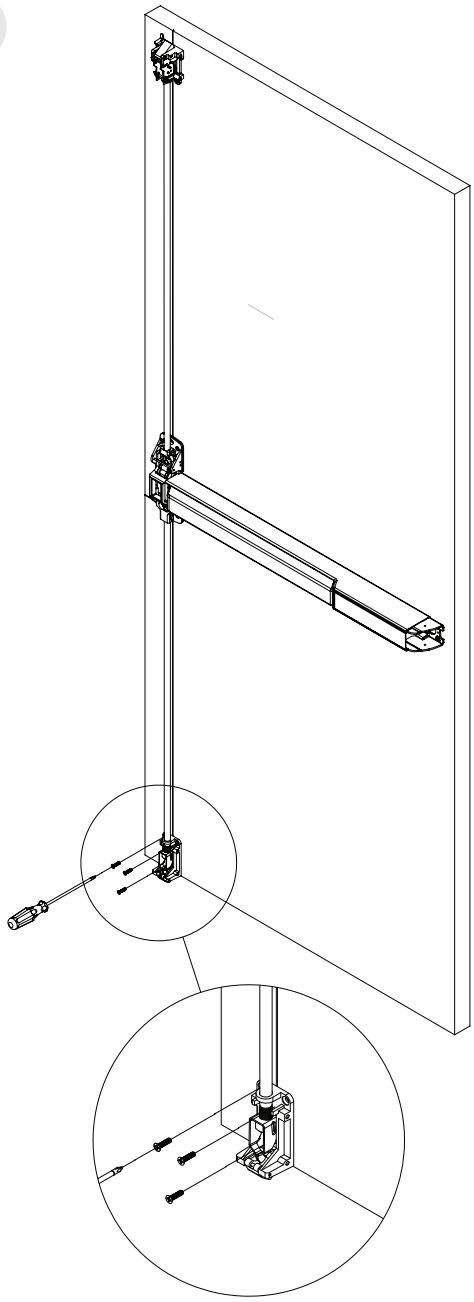

Mount bottom case using supplied screws.

Note: Bottom cases on fire rated doors must be thru-bolted.

Copyright © 2023, SARGENT Manufacturing Company. All rights reserved. Reproduction in whole or in part without the express written permission of SARGENT Manufacturing Company is prohibited. Patent pending and/or patent www.assaabloydss.com/patents.

22

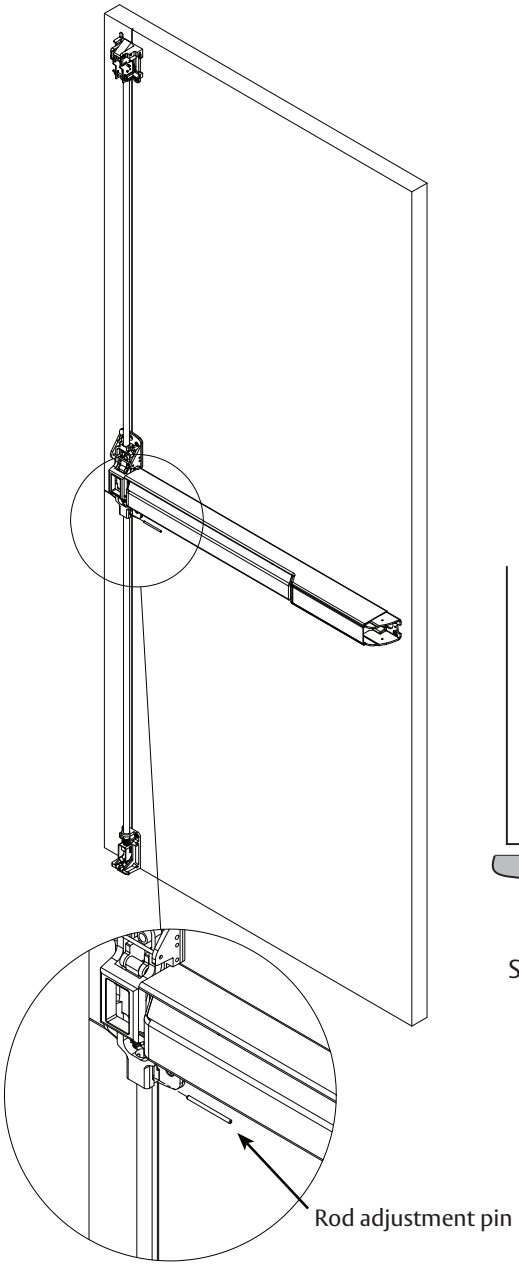

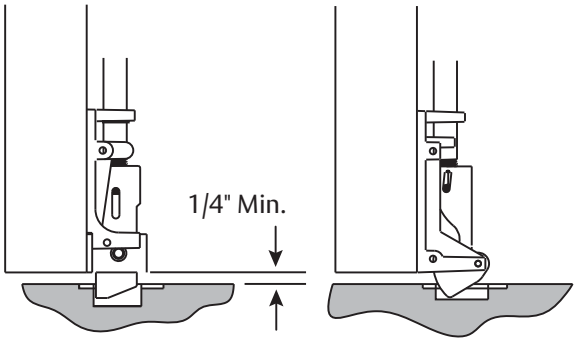

MORTISE APPLIED STRIKES

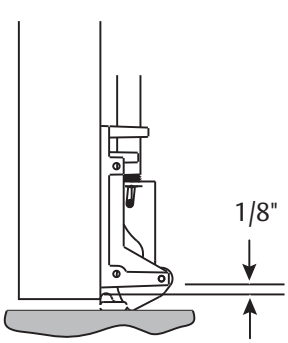

SURFACE APPLIED STRIKES

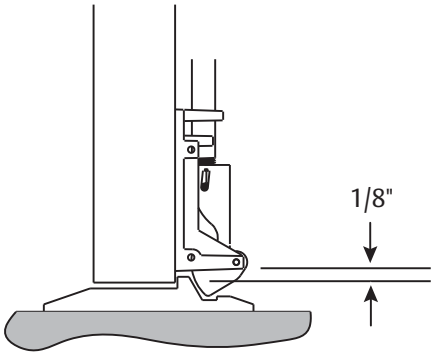

LATCH TRACK THRESHOLD (BY OTHERS)

Insert rod adjustment pin into middle hole. Raise or lower to achieve gap indicated for strike application. (See strike diagram above.)

Copyright © 2023, SARGENT Manufacturing Company. All rights reserved. Reproduction in whole or in part without the express written permission of SARGENT Manufacturing Company is prohibited. Patent pending and/or patent www.assaabloydss.com/patents.

Attach the top strikes:

23

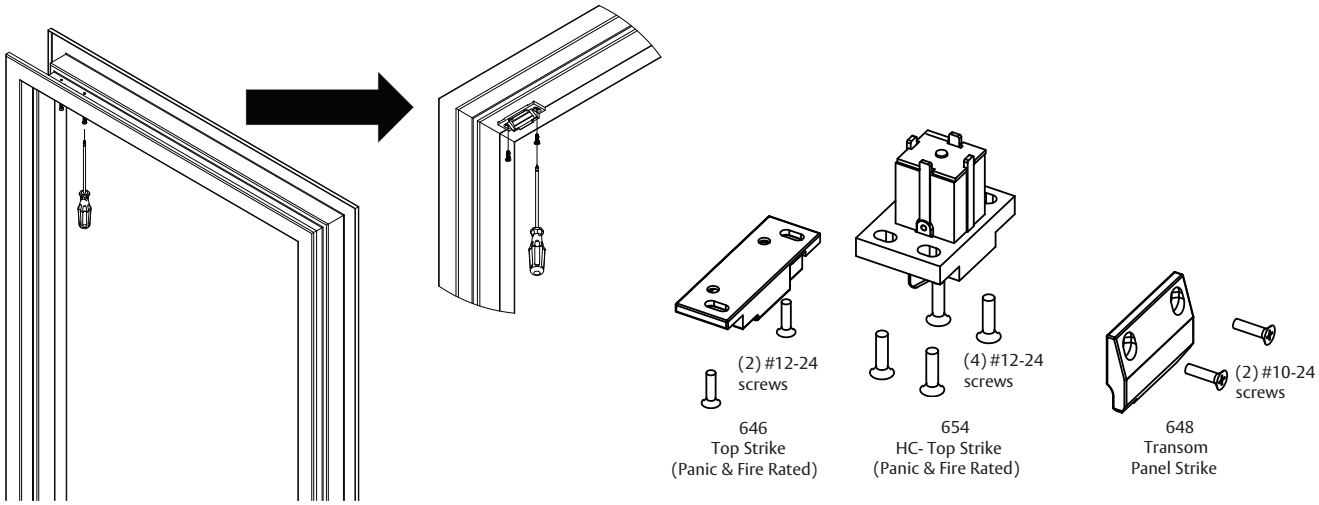

Mount top strike in position, and tighten screws.

24

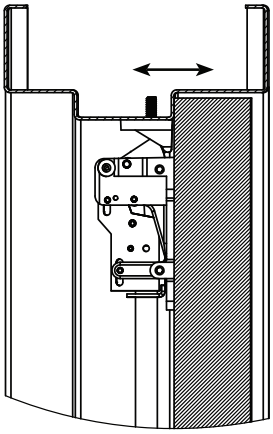

- Adjust the top strike, front to back using slots in strike.
- To increase engagement, shim the top strike.

Copyright © 2023, SARGENT Manufacturing Company. All rights reserved. Reproduction in whole or in part without the express written permission of SARGENT Manufacturing Company is prohibited. Patent pending and/or patent www.assaabloydss.com/patents.

Attach the bottom strikes:

25

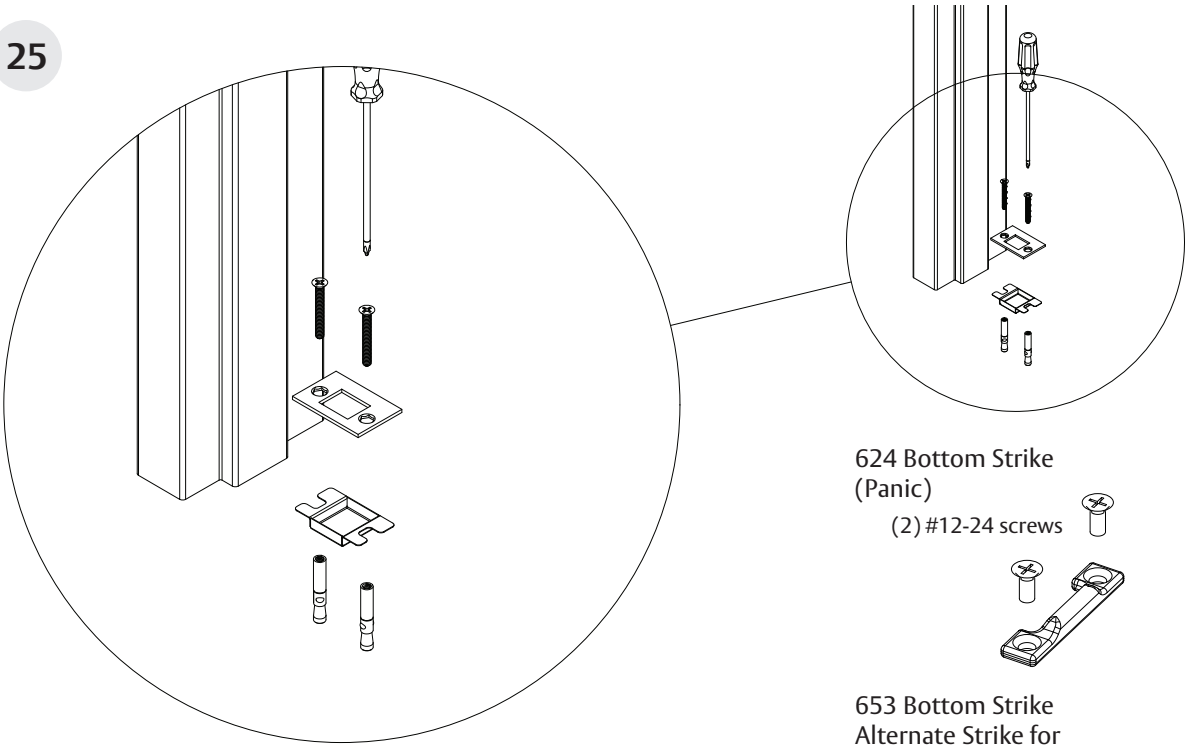

624 Bottom Strike (Panic)

(2) #12-24 screws

653 Bottom Strike Alternate Strike for HC-, 12-, 14-

(3) #1/4-20 screws

655 Bottom Strike (HC, 12- & 14-)

(2) 1/4-20 screws

Note: Use two (2) mortise nuts (when provided) in the position illustrated in the bottom case. Steel mortise nuts are twin knurled for identification.

For thresholds with integral strikes, skip to step 26.

For surface applied strikes 624 or 653:

WITH DOOR CLOSED:

- Transfer vertical centerline to floor or threshold and mark.
- Engage bottom strike with latchbolt and center on line marked.
- Mark mounting holes.
- Drill holes for required fasteners.
- Mount strike with fasteners provided.
- Tighten screws securely.

For mortised strikes: 636 or 655:

- Follow steps above.
- Mark mounting holes and outline of strike.

Copyright © 2023, SARGENT Manufacturing Company. All rights reserved. Reproduction in whole or in part without the express written permission of SARGENT Manufacturing Company is prohibited. Patent pending and/or patent www.assaabloydss.com/patents.

Adjust top and bottom rods:

26

Fine adjustment is made by turning the rod into the top and bottom case to shorten or out of the top and bottom case to lengthen.

Rough adjustment is made by changing hole used for the adjustment pin.

Top Rod Adjustments:

- Push on door as you push on the rail assembly.
- As soon as the door opens, release rail. The top bolt should be in the hold back position.
- If not, extend top bolt.

Note: The top bolt must go into hold back position prior to the door opening.

Bottom Rod Adjustments:

- Extend bottom bolt for maximum engagement with the bottom strike.
- When the top bolt is in, hold back, it also holds the bottom bolt in the retracted position.
- Always verify that when the bottom bolt is in the retracted position, the bolt clears the finished floor by at least 1/8" through the swing of the door.

Note: Both the top and bottom latch bolts must be adjusted for maximum engagement.

Copyright © 2023, SARGENT Manufacturing Company. All rights reserved. Reproduction in whole or in part without the express written permission of SARGENT Manufacturing Company is prohibited. Patent pending and/or patent www.assaabloydss.com/patents.

27

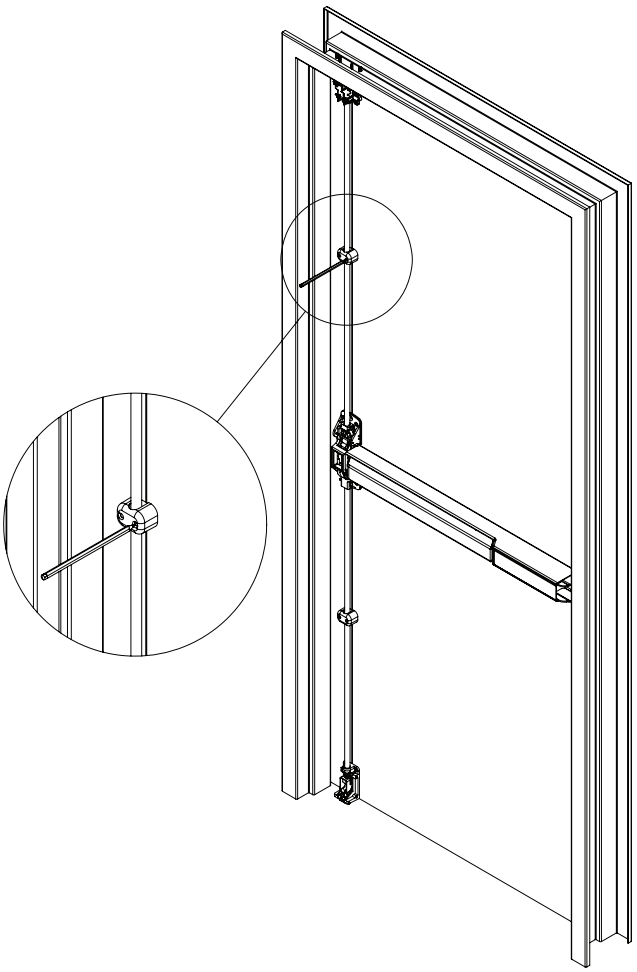

Center rod guides. Mark hole locations.

28

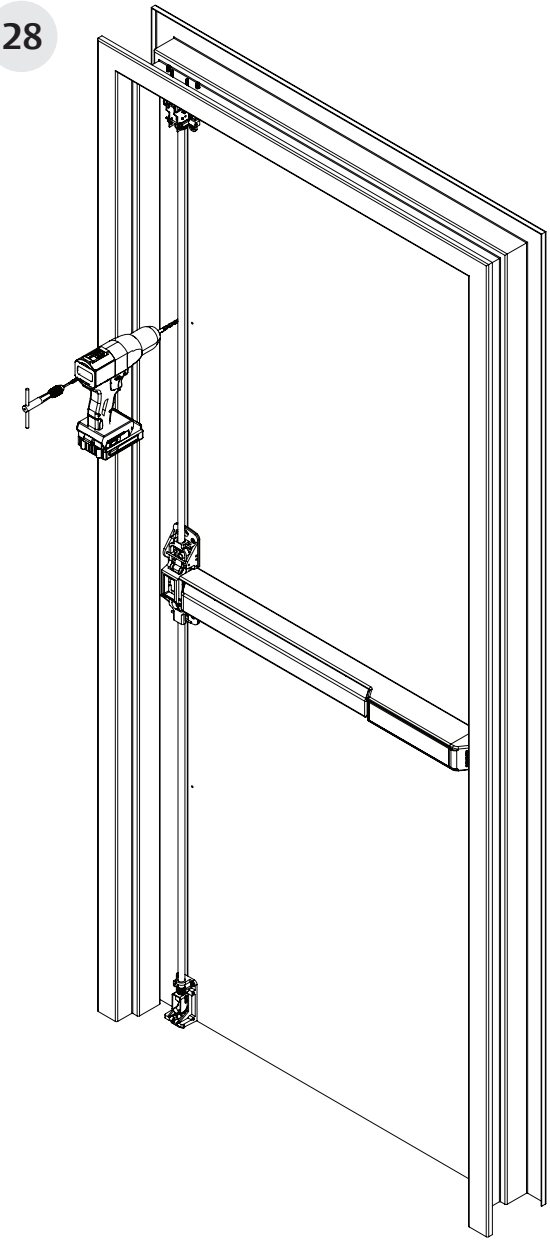

Drill and tap rod guide mounting holes #10-24 (4 Places).

Copyright © 2023, SARGENT Manufacturing Company. All rights reserved. Reproduction in whole or in part without the express written permission of SARGENT Manufacturing Company is prohibited. Patent pending and/or patent www.assaabloydss.com/patents.

29

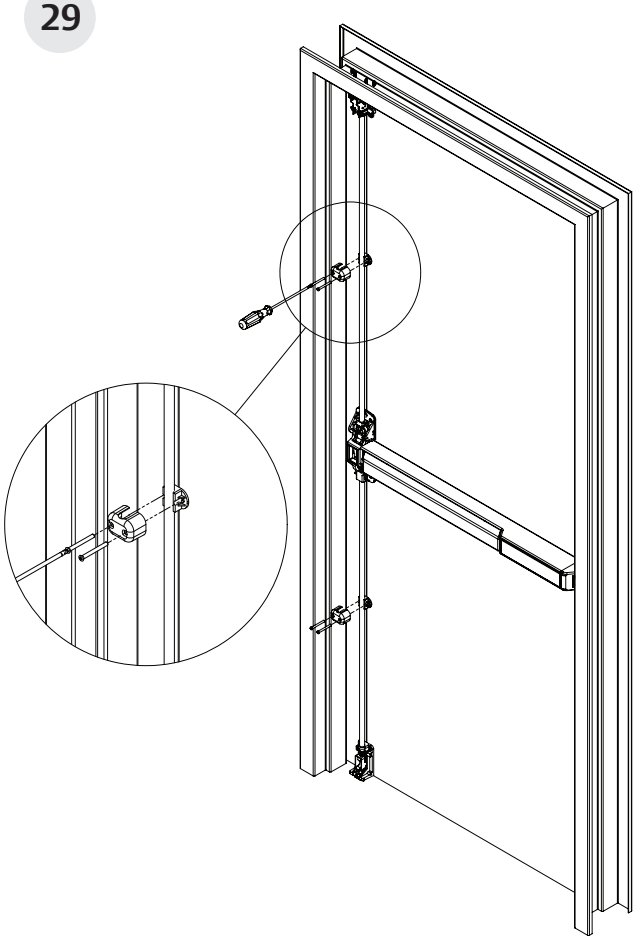

Install top and bottom rod guides. Rod must float freely in guide without rubbing.

Note: For doors over 96": Install two (2) top rod guides equally spaced between the top case and the chassis cover.

30

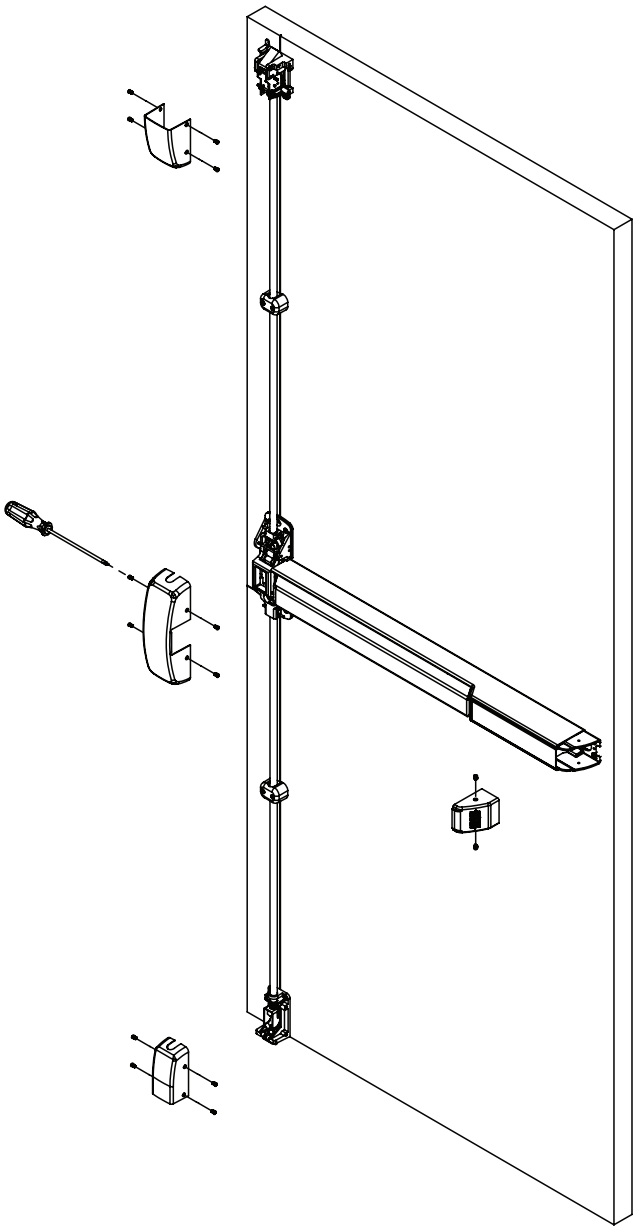

Install top, bottom and center chassis covers as shown. Install end cap as shown.

Copyright © 2023, SARGENT Manufacturing Company. All rights reserved. Reproduction in whole or in part without the express written permission of SARGENT Manufacturing Company is prohibited. Patent pending and/or patent www.assaabloydss.com/patents.

SARGENT
ASSA ABLOY

31

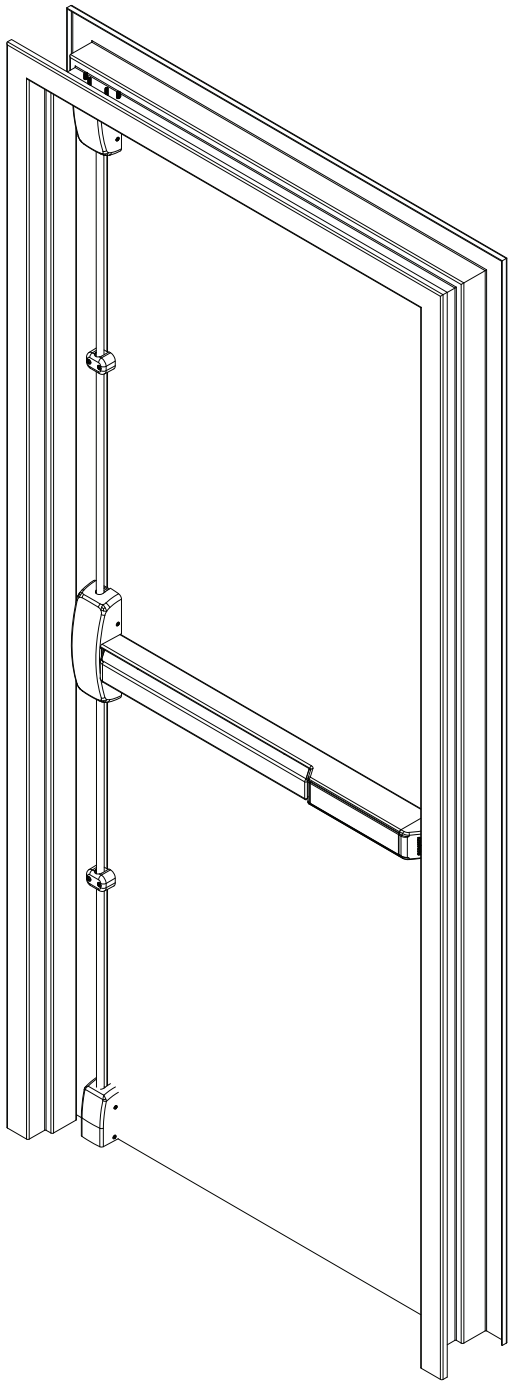

Check for proper operation.

1-800-727-5477 • www.sargentlock.com

Copyright © 2023, SARGENT Manufacturing Company. All rights reserved. Reproduction in whole or in part without the express written permission of SARGENT Manufacturing Company is prohibited. Patent pending and/or patent www.assaabloydss.com/patents.

A8307-1 5/23

Experience a safer
and more open world