Installation Instructions

SARGENT
ASSA ABLOY

PE8800 Series - Standard, Fire Rated & Windstorm Rated

Rim Exit Devices With All Standard Trim

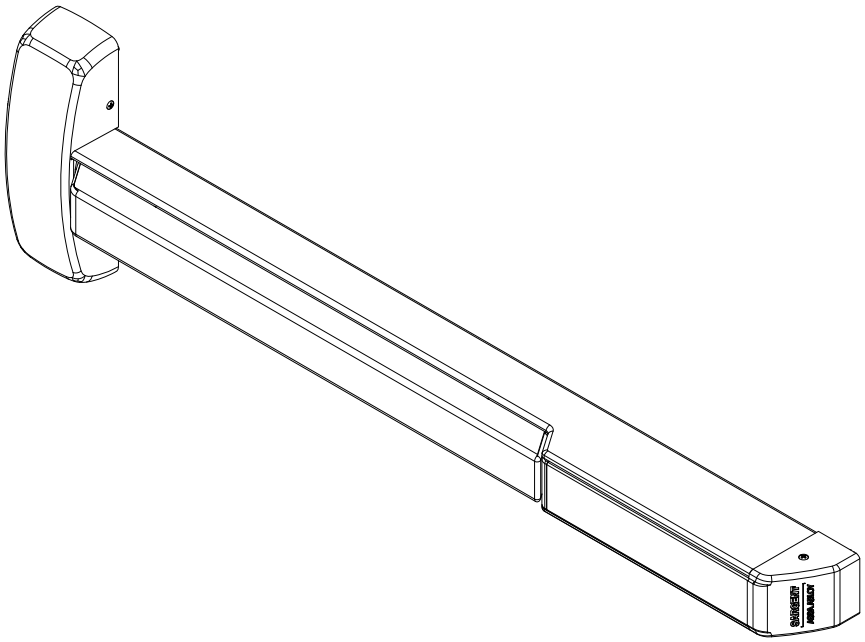

⚠ WARNING

This product can expose you to lead which is known to the state of California to cause cancer and birth defects or other reproductive harm. For more information go to www.P65warnings.ca.gov.

⚠ WARNING

Attention Installer: Improper installation may result in damage to the product and void the factory warranty.

1-800-727-5477 • www.sargentlock.com

Copyright © 2023, SARGENT Manufacturing Company. All rights reserved. Reproduction in whole or in part without the express written permission of SARGENT Manufacturing Company is prohibited. Patent pending and/or patent www.assaabloydss.com/patents.

A8301-1 5/23

Experience a safer and more open world

SARGENT
ASSA ABLOY

Screw Chart

SCREW	TOTAL QTY SUPPLIED	WHERE USED
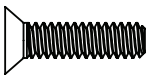 #10-24 X 3/4" FLAT HEAD MACHINE SCREW	4	(4) CHASSIS CORNER MOUNTING HOLES (METAL DOOR)
#10 X 1-1/4" FLAT HEAD WOOD SCREW	4	(4) CHASSIS CORNER MOUNTING HOLES (WOOD DOOR)
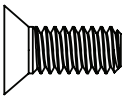 1/4"-20 X 5/8" FLAT HEAD MACHINE SCREW	2	(2) CHASSIS INNER MOUNTING HOLES (METAL DOOR, FIRE RATED)
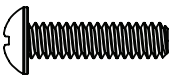 #10-24 X 3/4" ROUND HEAD MACHINE SCREW	4	(2) REAR MOUNTING PLATE (METAL DOOR) (2) 649 STRIKE INNER MOUNTING HOLES
#10 X 1-1/4" ROUND HEAD WOOD SCREW	2	(2) REAR MOUNTING PLATE (WOOD DOOR)
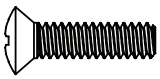 #10-24 X 3/4" OVAL HEAD MACHINE SCREW	2	(2) 649 STRIKE OUTER MOUNTING HOLES (METAL FRAME)
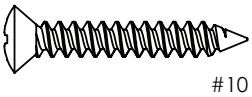 #10 X 1-1/4" OVAL HEAD WOOD SCREW	2	(2) 649 STRIKE OUTER MOUNTING HOLES (WOOD FRAME)
#8-32 X 5/16" W/ #6 OVAL HEAD MACHINE SCREW	6	(4) CHASSIS COVER (2) END CAP
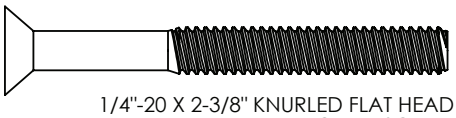 1/4"-20 X 2-3/8" KNURLED FLAT HEAD MACHINE SCREW	2	(2) EXIT TRIM (IF USED)

Copyright © 2023, SARGENT Manufacturing Company. All rights reserved. Reproduction in whole or in part without the express written permission of SARGENT Manufacturing Company is prohibited. Patent pending and/or patent www.assaabloydss.com/patents.

Experience a safer and more open world

PE8800 Series - Standard, Fire Rated & Windstorm Rated

Rim Exit Devices With All Standard Trim

Installation Instructions

Tools Needed

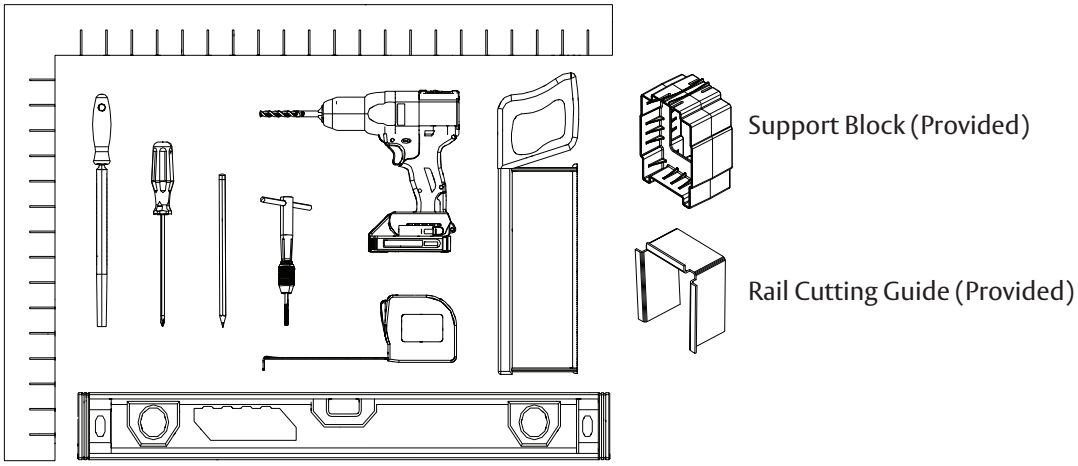

PE8800 Standard / 12-PE8800 Fire Rated Exploded View

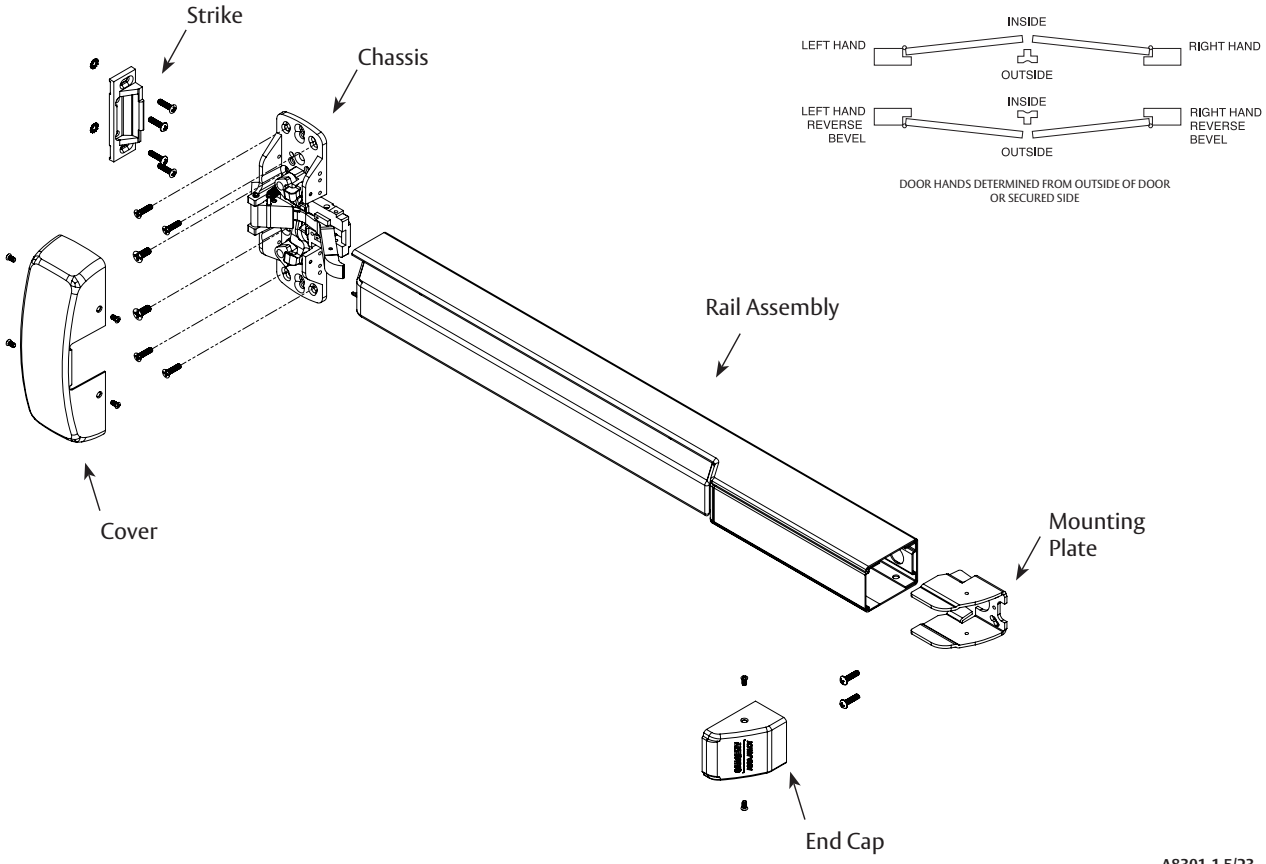

Copyright © 2023, SARGENT Manufacturing Company. All rights reserved. Reproduction in whole or in part without the express written permission of SARGENT Manufacturing Company is prohibited. Patent pending and/or patent www.assaabloydss.com/patents.

WS-PE8800 Windstorm Rated /12-WS-PE800 Windstorm Fire Rated Exploded View

Requires 3 shims under the chassis and end bracket.

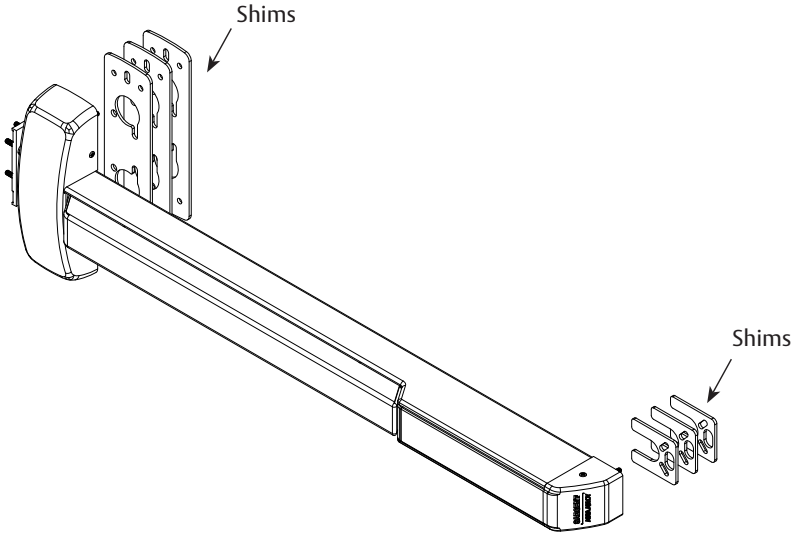

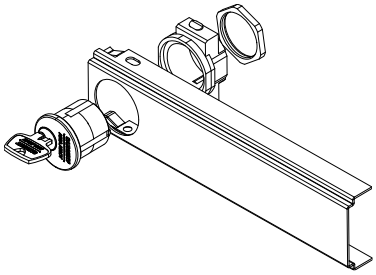

16- Cylinder Lockdown
(Exploded View For Clarity)

HC-PE8800 & 12-HC-PE8800 Rim Exit Device

(Not Shown)
Requires 2 shims under the chassis and end bracket.

Before installation:

1. Install mullion, if used.
2. Fit and hang door.
3. Check the box's label for the size of the exit device.
4. For wood doors, use wood screws and prep accordingly.

The surface of the door where the exit device is to be applied must be flush. Clear away any raised projections to allow exit device to rest on the flat surface of the door. If shim kit is required, contact your distributor.

Note: Please refer to trim and other installation instructions provided in the box.

Copyright © 2023, SARGENT Manufacturing Company. All rights reserved. Reproduction in whole or in part without the express written permission of SARGENT Manufacturing Company is prohibited. Patent pending and/or patent www.assaabloydss.com/patents.

PE8800 Series - Standard, Fire Rated & Windstorm Rated

Rim Exit Devices With All Standard Trim

Installation Instructions

1

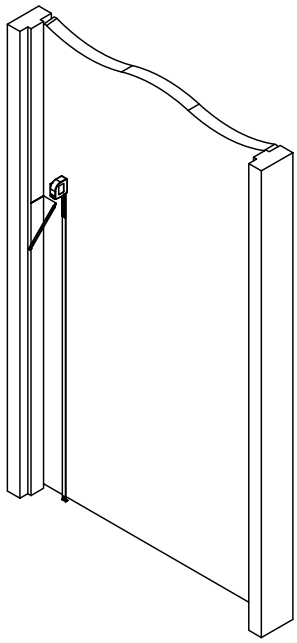

Measure 39-5/8” from the finished floor and mark door and frame.

2

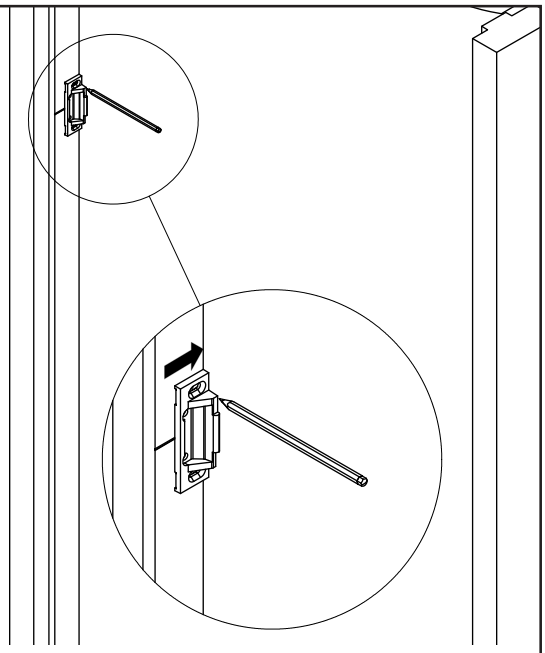

Place strike against frame, centered on the line marked in Step 1. With the strike pressed against the closed door, trace upper and lower strike slots.

3

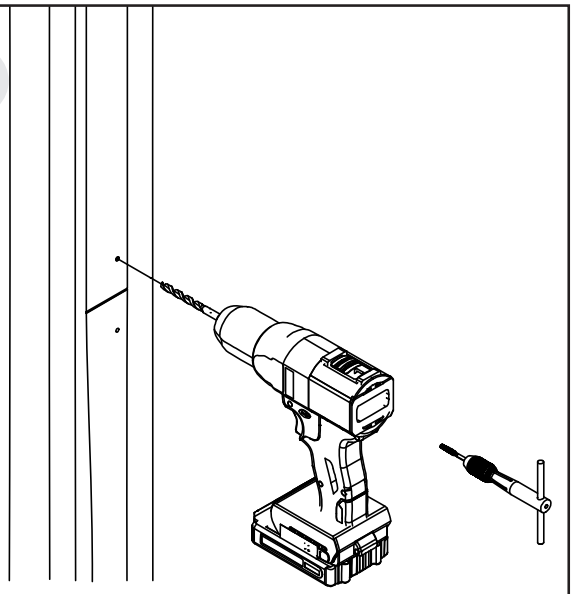

Drill and tap outer strike holes #10-24 (2 places).

4

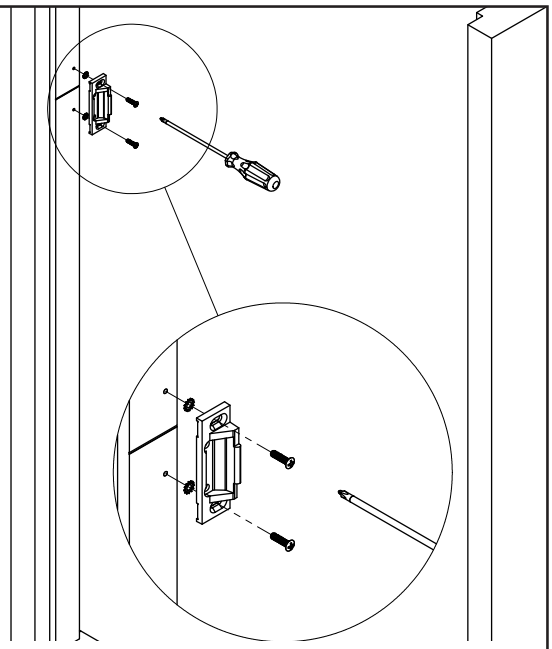

Install strike using oval head phillips #10-24 x 3/4” screws and washers supplied.

A8301-1 5/23

1-800-727-5477 • www.sargentlock.com

Copyright © 2023, SARGENT Manufacturing Company. All rights reserved. Reproduction in whole or in part without the express written permission of SARGENT Manufacturing Company is prohibited. Patent pending and/or patent www.assaabloydss.com/patents.

Experience a safer and more open world

5

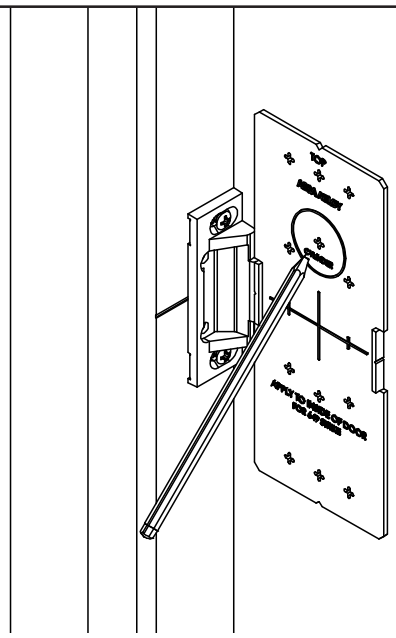

Place supplied plastic template against the strike. Mark centerlines and mounting holds per device function.

6

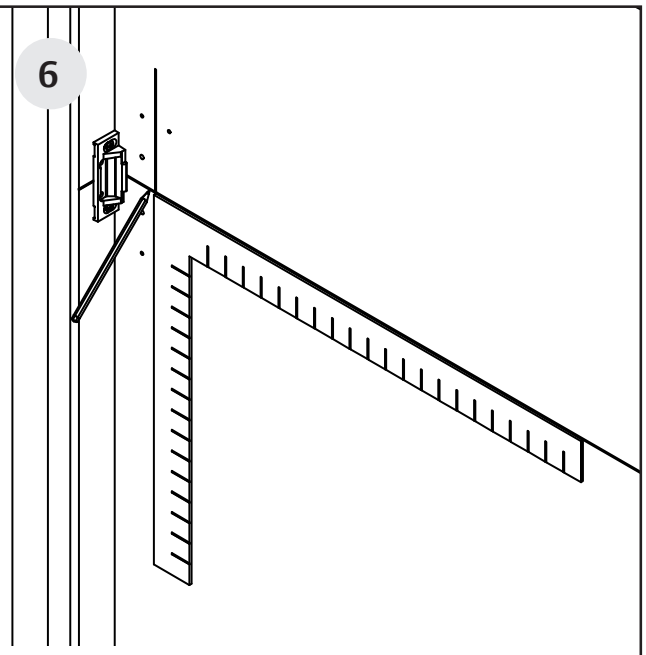

Using a square, extend centerline marks created in Step 5.

7

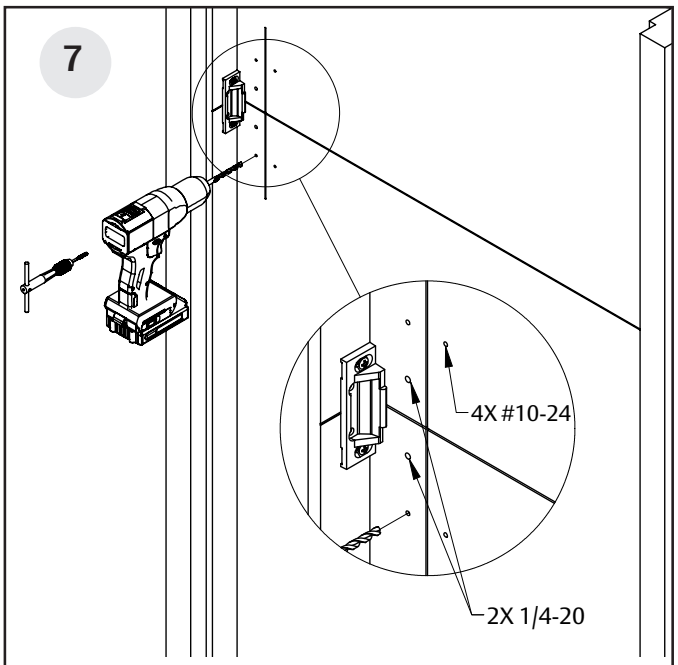

Prepare chassis mounting holes.

- 2X 1/4-20 and 4X #10-24 Thread.
- Refer to supplied trim template as needed.

8

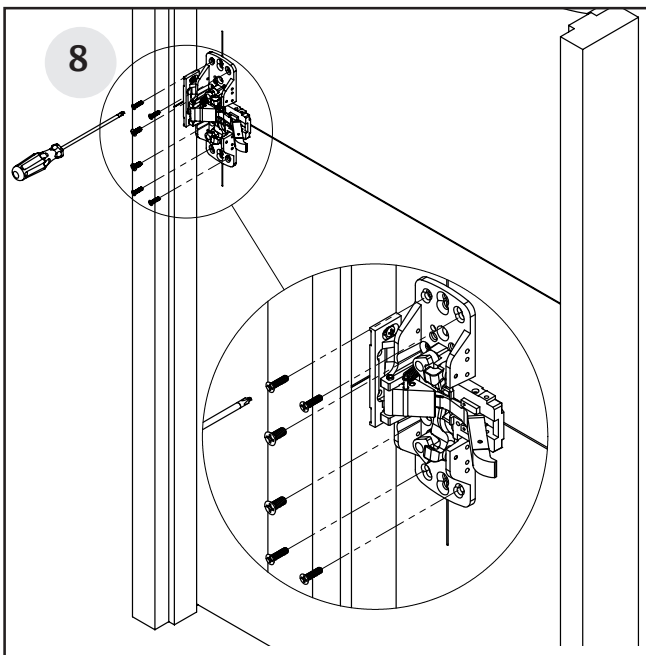

Install chassis mounting screws. **DO NOT FULLY TIGHTEN SCREWS.** If using thumbpiece trim/pull, reference steps 20b & 20c before proceeding.

Copyright © 2023, SARGENT Manufacturing Company. All rights reserved. Reproduction in whole or in part without the express written permission of SARGENT Manufacturing Company is prohibited. Patent pending and/or patent www.assaabloydss.com/patents.

Rail cutting guide

If the rail doesn't need to be cut, continue to page 9, step 9.
If the rail must be cut, follow these steps on page 7 and 8:

Refer to the individual exit device installation instructions for rail cutting requirements / restrictions. Instructions will vary based on device type and options.

- Determine cut off dimension "X" by subtracting 2-7/8" from dimension "Y". Mark cut off point on mounting rail. (See below.)

⚠ Do not cut closer than 1-5/8" from the the front edge of the rail insert.

Information for Cutting Rails		
Rail Sizes	Door Widths	
	Standard	Minimum
E	32"	24"
F	36"	33"
J	42"	37"
G	48"	43"

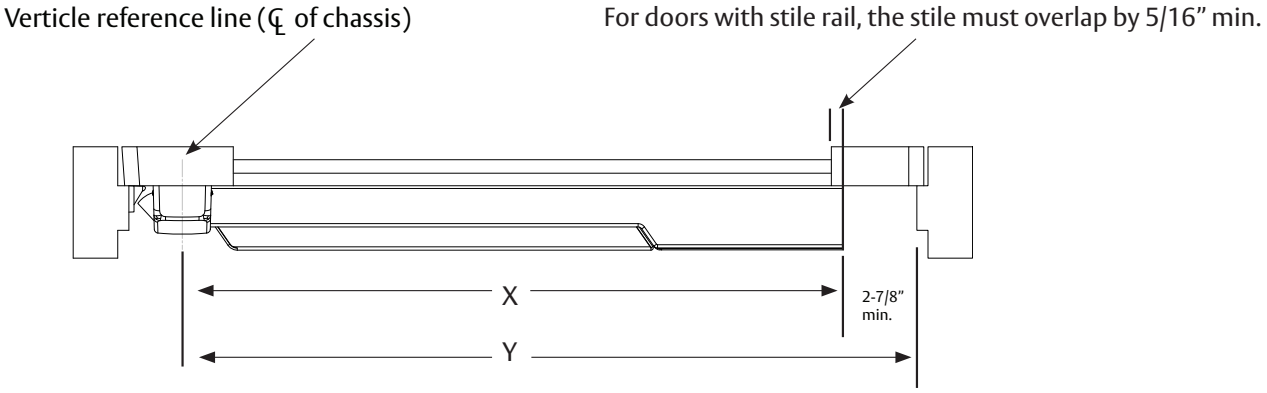

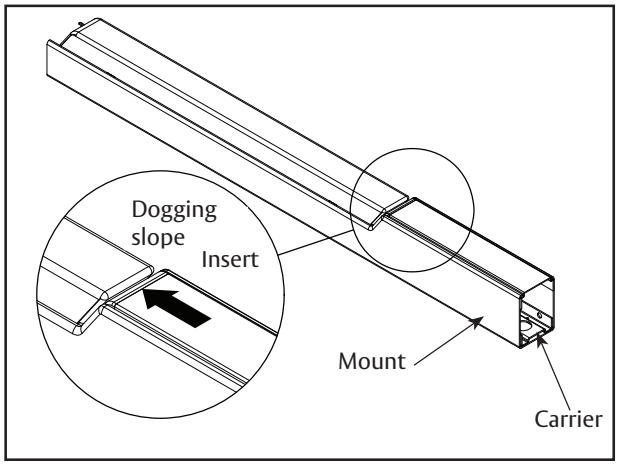

A. Ensure there isn't a gap between the insert and the dogging slope, and the carrier is flush with the mount.

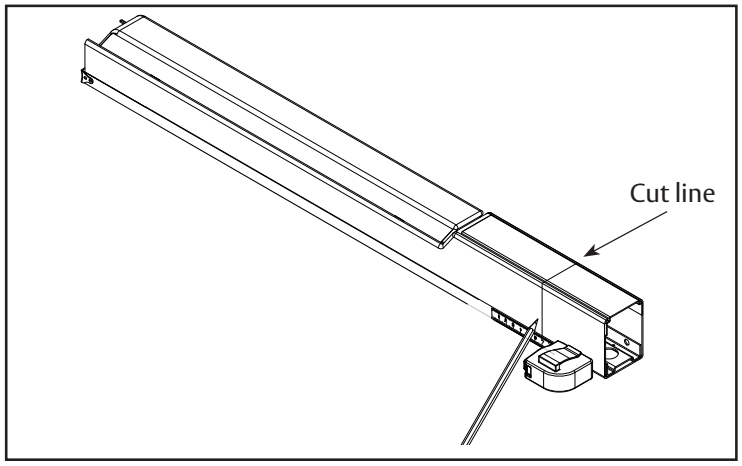

B. Mark rail at the required cut length.

Copyright © 2023, SARGENT Manufacturing Company. All rights reserved. Reproduction in whole or in part without the express written permission of SARGENT Manufacturing Company is prohibited. Patent pending and/or patent www.assaabloydss.com/patents.

Rail cutting guide, continued.

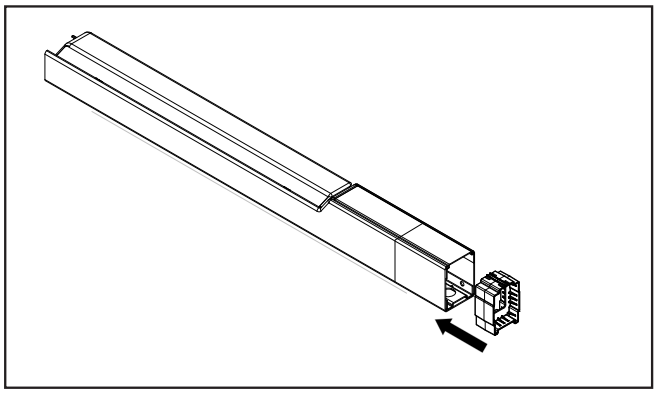

C. Ensure plastic insert support is installed under the cut line.

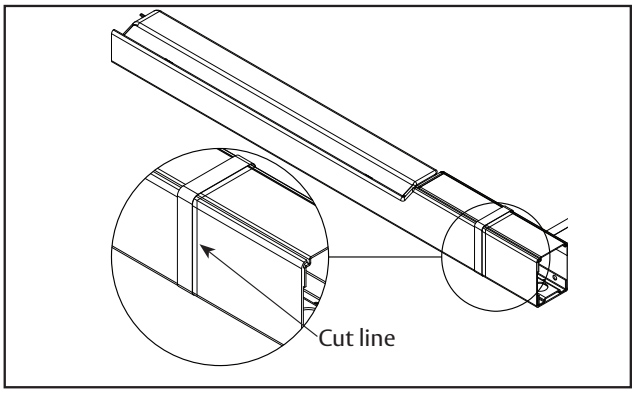

D. Wrap the rail and insert in masking tape, as shown.

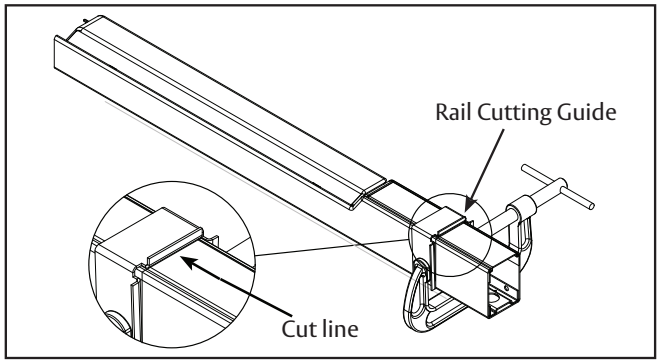

E. Place the rail cutting guide over the masking tape and align it with the cut line. Clamp the cut guide to the rail using a C-clamp.

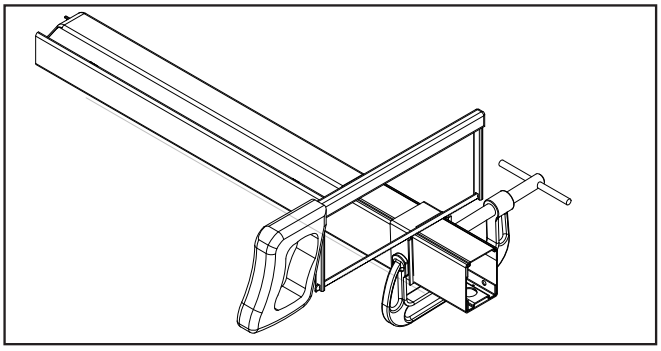

F. Using a hack saw with a new blade or a chop saw with a metal cutting blade, cut the rail, ensuring that the blade stays pressed against the rail cutting guide.

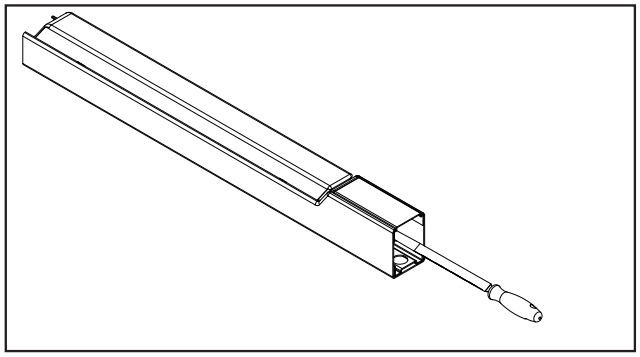

G. Deburr and smooth all cut edges with a file.

Copyright © 2023, SARGENT Manufacturing Company. All rights reserved. Reproduction in whole or in part without the express written permission of SARGENT Manufacturing Company is prohibited. Patent pending and/or patent www.assaabloydss.com/patents.

9

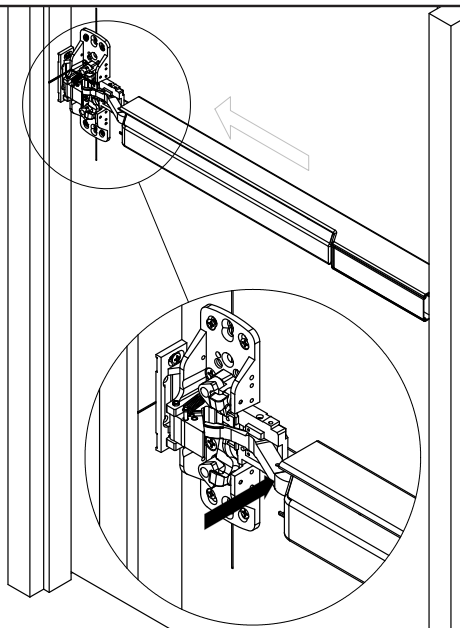

Depress chassis lift arm, and slide rail assemby onto chassis.

10

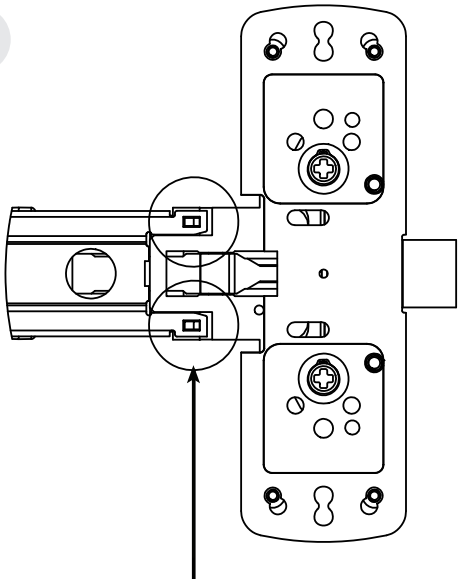

Ensure rail carrier tabs are aligned with chassis.

11

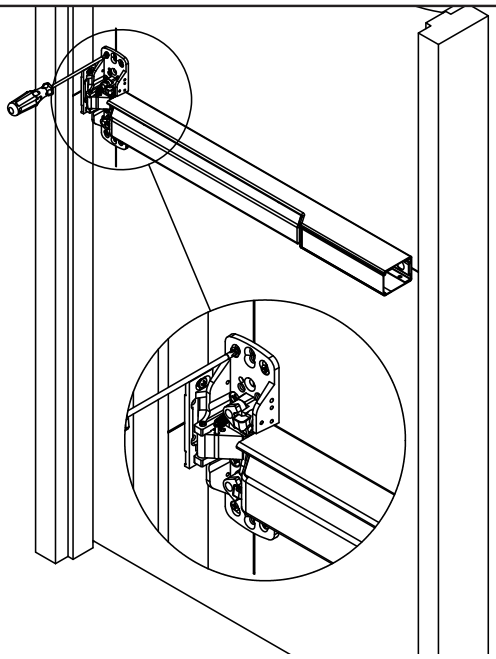

Fully tighten chassis screws.

12

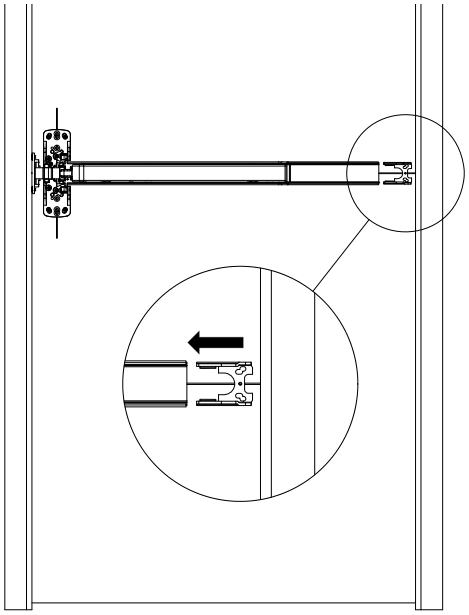

Insert the end cap bracket into the rail assembly.

Copyright © 2023, SARGENT Manufacturing Company. All rights reserved. Reproduction in whole or in part without the express written permission of SARGENT Manufacturing Company is prohibited. Patent pending and/or patent www.assaabloydss.com/patents.

13

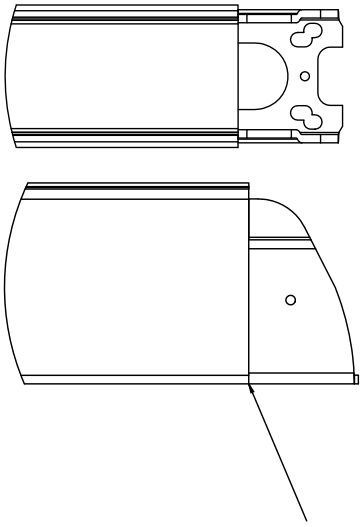

Ensure mounting rail bracket is against the rail without a gap.

14

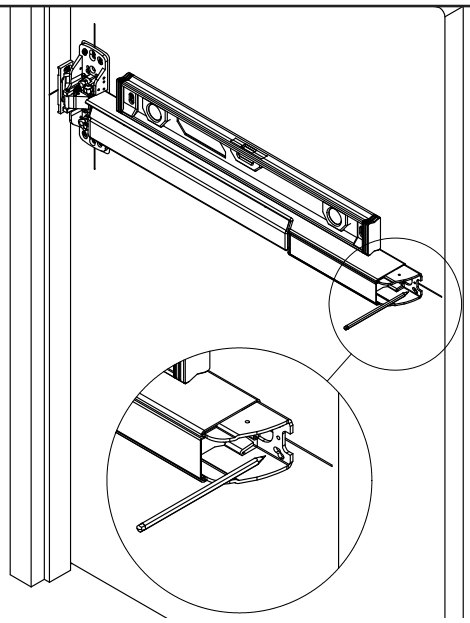

Level the rail and mark mounting holes, using the bracket as a guide.

15

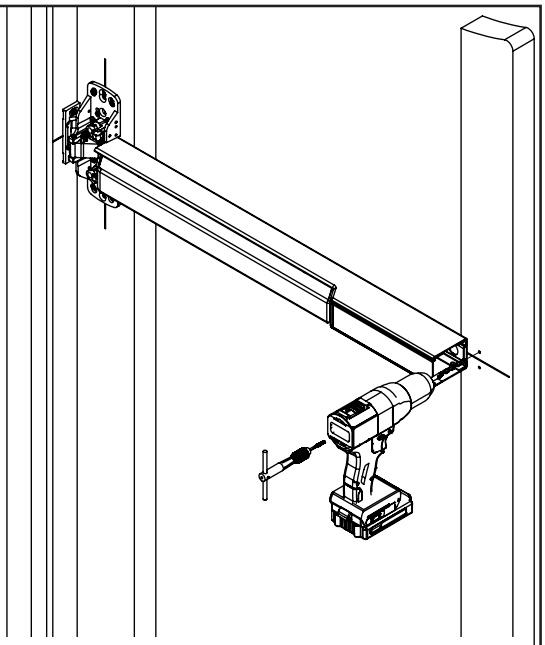

Drill and tap end cap bracket holes #10-24 (2 Places).

16

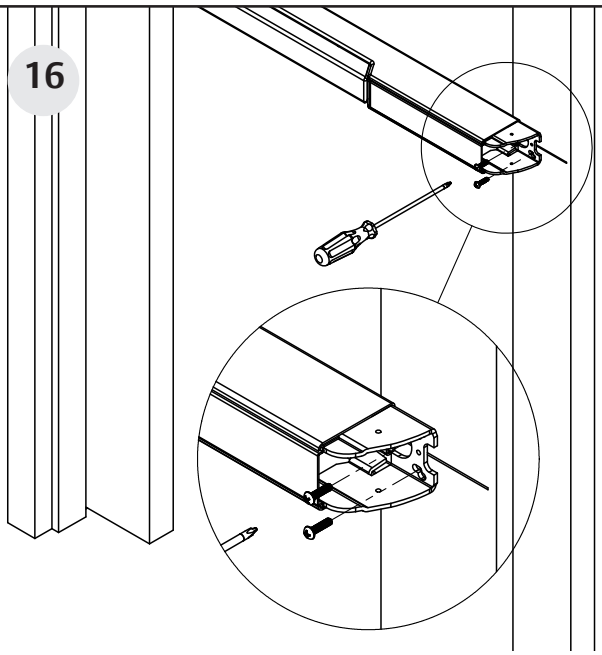

Install end cap bracket using round head phillips #10-24 x 1” screws, supplied.

Copyright © 2023, SARGENT Manufacturing Company. All rights reserved. Reproduction in whole or in part without the express written permission of SARGENT Manufacturing Company is prohibited. Patent pending and/or patent www.assaabloydss.com/patents.

17

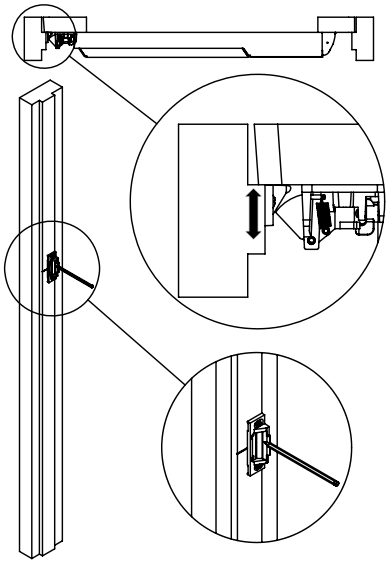

Loosen the outer strike mounting screws. Adjust strike for smooth latching. Retighten screws then mark the two inner strike holes.

18

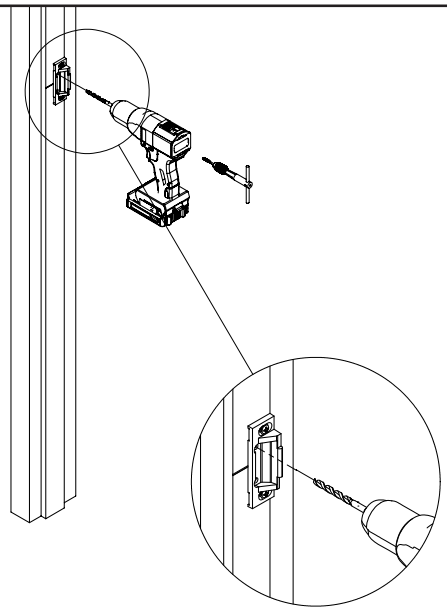

Drill and tap inner strike holes #10-24 (2 Places).

19

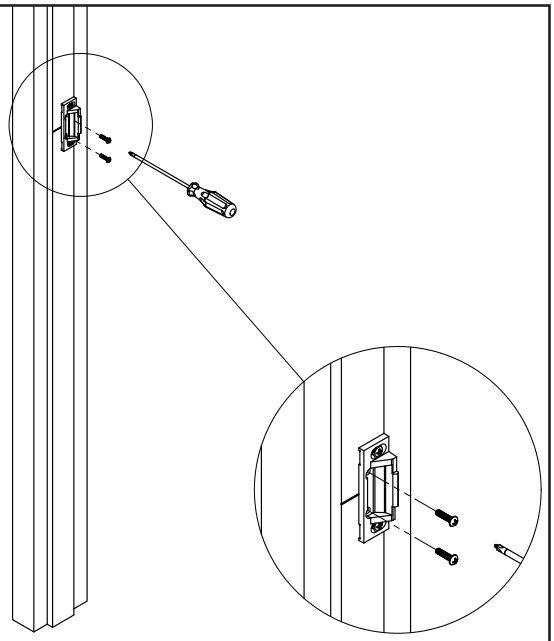

Install strike lock down screws using supplied round head phillips #10-24 x 3/4" screws.

20

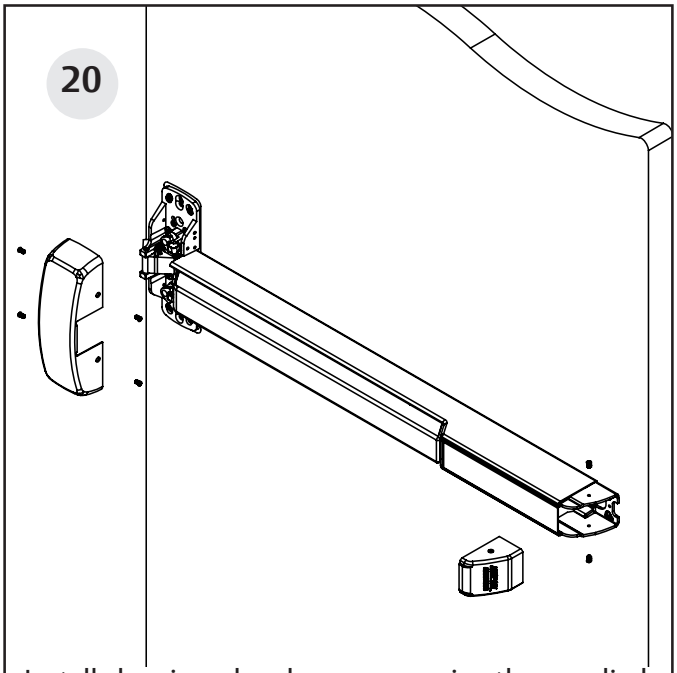

Install chassis and end cap cover using the supplied #8-32 x 5/16" oval head screws.

Copyright © 2023, SARGENT Manufacturing Company. All rights reserved. Reproduction in whole or in part without the express written permission of SARGENT Manufacturing Company is prohibited. Patent pending and/or patent www.assaabloydss.com/patents.

20a If P700 Series Exit Trim is used:

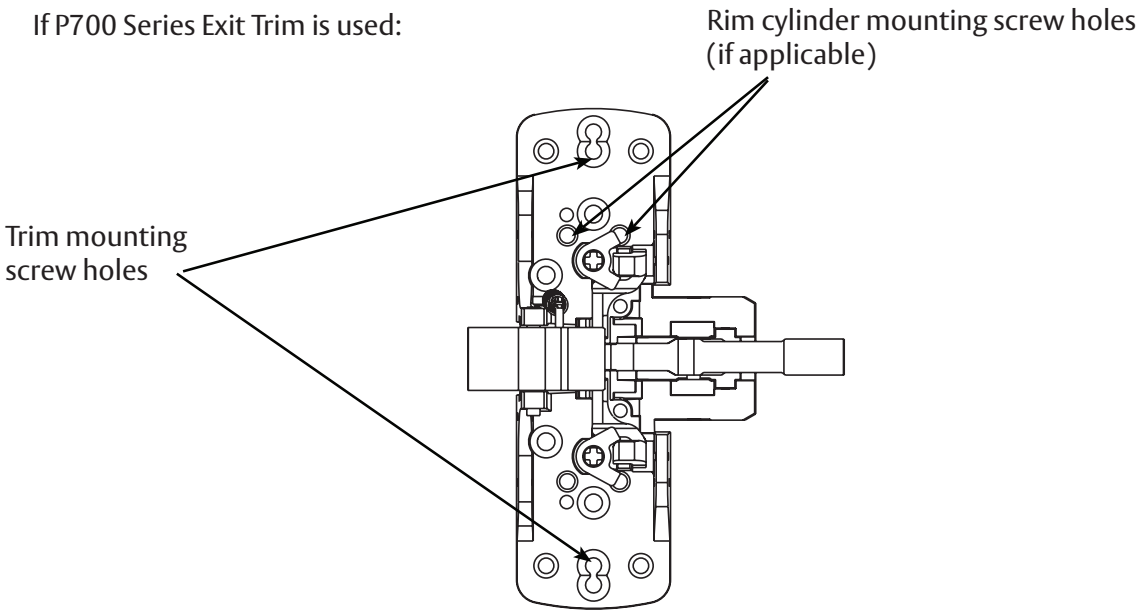

- Attach trim using the two (2) 1/4" - 20 x 2-3/8" Phillips flat head machine screws through the appropriate mounting holes in the chassis.

- For rim cylinder functions, install cylinder through the trim using the two (2) #10-24 x 1-7/8" with #8 Phillips flat head machine screws through the appropriate mounting holes in the chassis, ensuring cylinder tail piece engages with the hub.

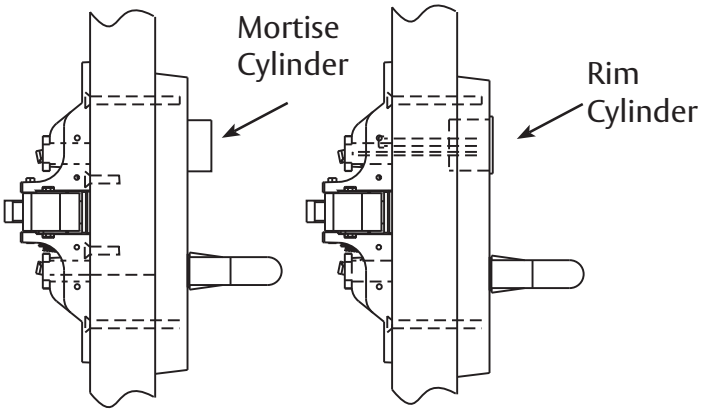

Copyright © 2023, SARGENT Manufacturing Company. All rights reserved. Reproduction in whole or in part without the express written permission of SARGENT Manufacturing Company is prohibited. Patent pending and/or patent www.assaabloydss.com/patents.

20b If PTB, FLL, FLW or MAL Pull Trim is used:

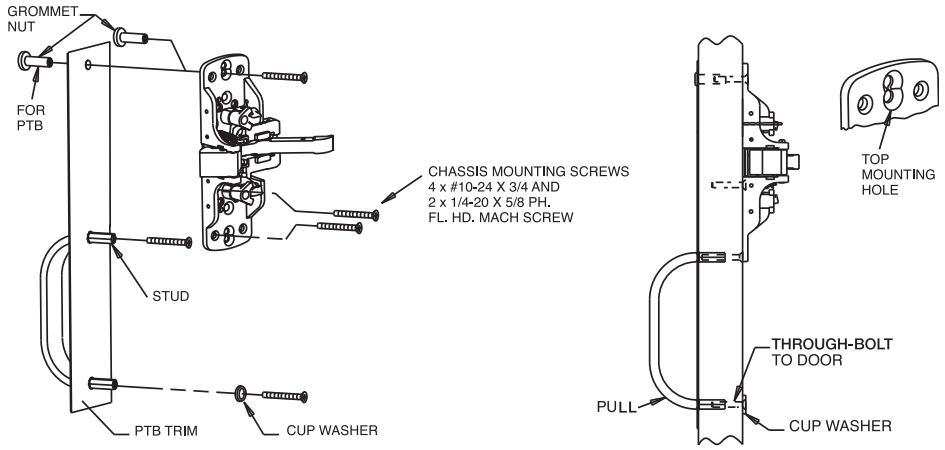

- Prepare the door with the provided template.
- Position the trim on the door with 1/4-20 x 5/8” machine screws as shown, using cup washer to thru bolt the bottom.

20c If PSB, FSL, FSW, MSL or STS Pull Trim is used:

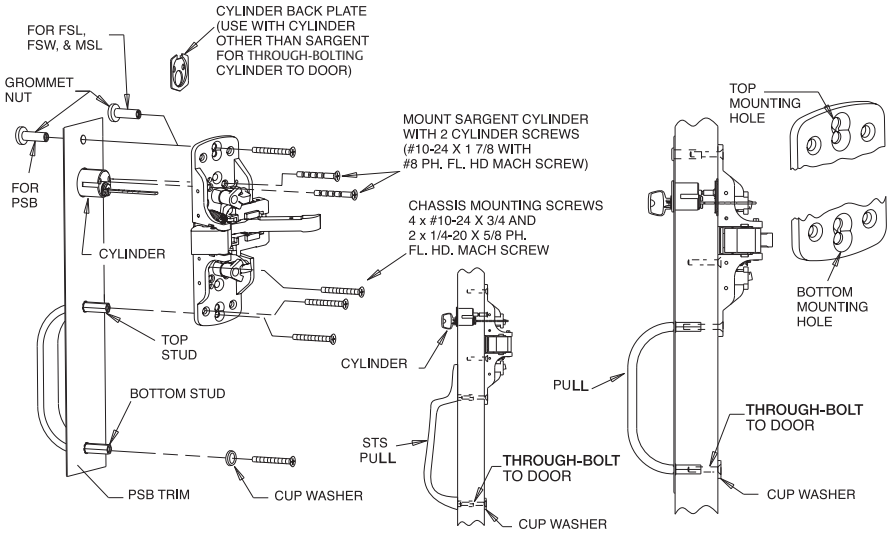

- Thru-bolt grommet nut throught the top chassis mounting hole.
- Thru-bolt top stud to bottom chassis mounting hole.
- Thru-bolt bottom stud through cup washer.
- Thru-bolt Sargent cylinder to chassis thru trim. If screw is too long, break off at notches as needed.

Copyright © 2023, SARGENT Manufacturing Company. All rights reserved. Reproduction in whole or in part without the express written permission of SARGENT Manufacturing Company is prohibited. Patent pending and/or patent www.assaabloydss.com/patents.

21

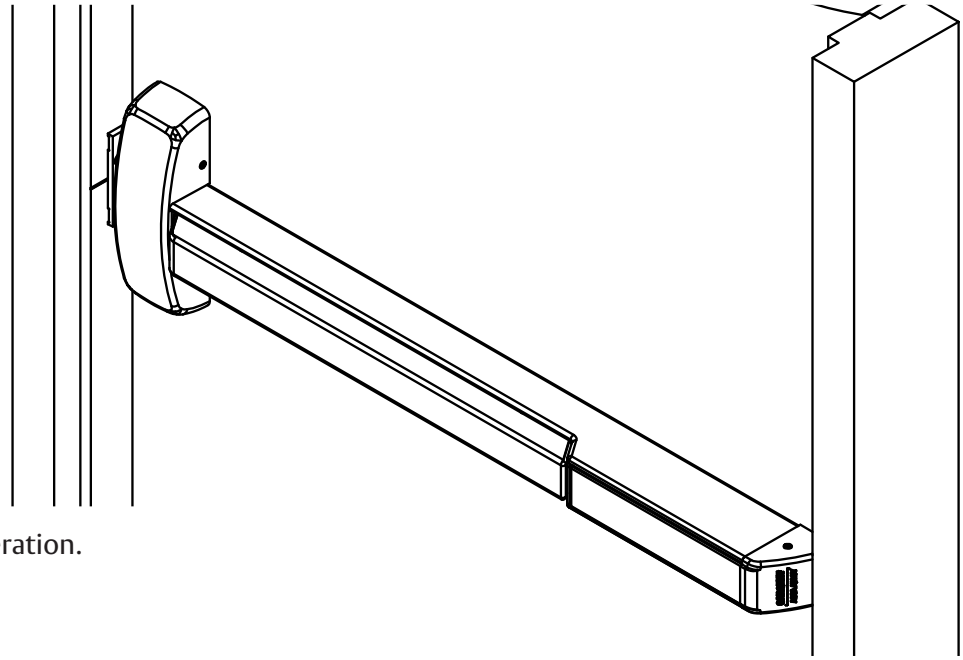

Check for proper operation.

22

(53-) Latch Bolt Monitoring Adjustment

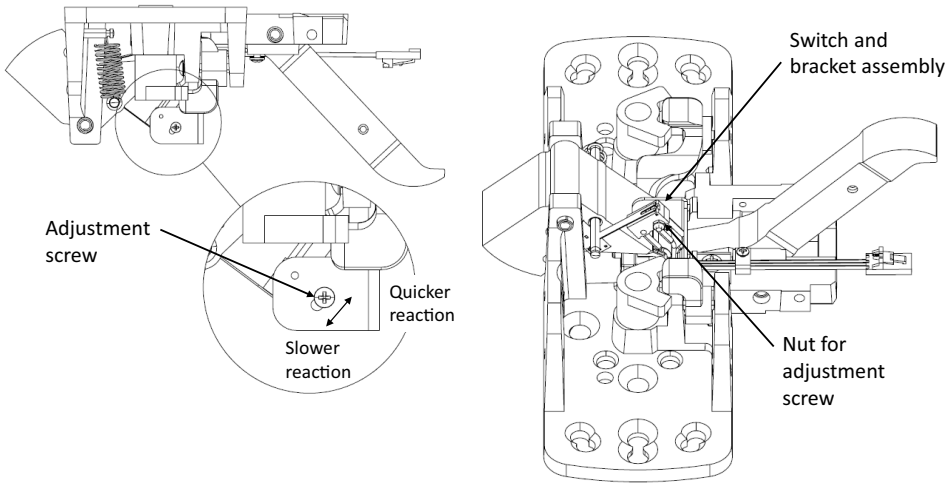

- Loosen adjustment screw and nut.
- Rotate switch.
- Tighten adjustment screw and nut.
- Check operation.

For more information scan the QR code.

Copyright © 2023, SARGENT Manufacturing Company. All rights reserved. Reproduction in whole or in part without the express written permission of SARGENT Manufacturing Company is prohibited. Patent pending and/or patent www.assaabloydss.com/patents.

Copyright © 2023, SARGENT Manufacturing Company. All rights reserved. Reproduction in whole or in part without the express written permission of SARGENT Manufacturing Company is prohibited. Patent pending and/or patent www.assaabloydss.com/patents.

SARGENT®

ASSA ABLOY

1-800-727-5477 • www.sargentlock.com

Copyright © 2023, SARGENT Manufacturing Company. All rights reserved. Reproduction in whole or in part without the express written permission of SARGENT Manufacturing Company is prohibited. Patent pending and/or patent www.assaabloydss.com/patents.

A8301-1 5/23

Experience a safer
and more open world