Installation Instructions

SARGENT
ASSA ABLOY

Multi-Point Lock

FM7300 Series and BL7300 Series

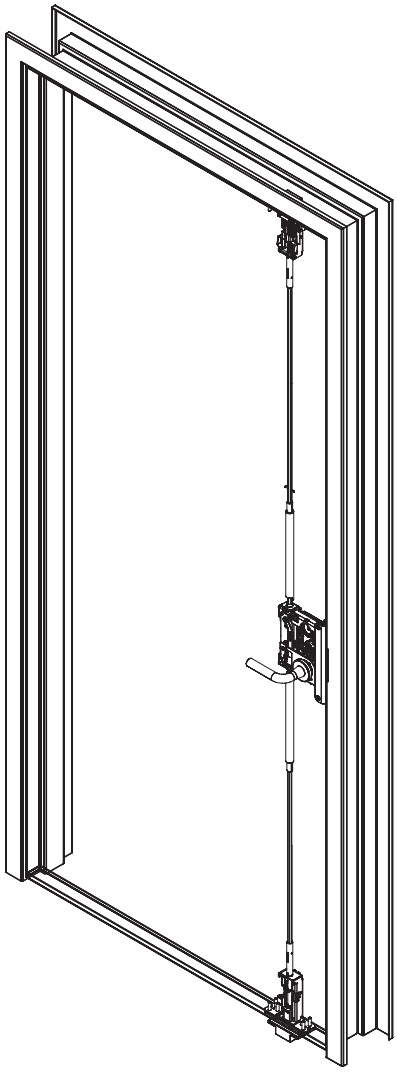

Important
The latches, rods, and cassette are pre-installed.
This product must be installed by a factory trained technician.

⚠ WARNING

This product can expose you to lead which is known to the state of California to cause cancer and birth defects or other reproductive harm. For more information go to www.P65warnings.ca.gov.

Copyright © 2017, 2019, SARGENT Manufacturing Company. All rights reserved. Reproduction in whole or in part without the express written permission of SARGENT Manufacturing Company is prohibited.

Experience a safer
and more open world

SARGENT
ASSA ABLOY

TOC Table of Contents

1		Package Contents 4
2		Tools Required 5
	a	Tools Required for Electronic Access Control (EAC) Shield 5
	b	Tools Required for Dogging Indicator Option....5
3		Installation 6
	a	Check Door....6
	b	Door Installation 6
	c	Install Top Strike into Door Frame....6
	d	Install Center Strike into Door Frame....7
	e	Remove Retractor Inserts....7
	f	Check Latches (uninstalled)....7
	g	Install Bottom Strike....8
	h	Top and Bottom Latch Adjustment.... 10
	i	Mortise Lock Install 12
	j	Final Mortise Lock and Trim Installation 13
	k	Electronic Access Control (EAC) Reader and Controller Installation 13
	l	Deadbolt Label Installation (FM7300 Only) 13
	m	Key Override with Deadbolt Function Operation Check 13
	n	Electronic Access Control (EAC) Shield (if applicable).... 14

Copyright © 2017, 2019, SARGENT Manufacturing Company. All rights reserved. Reproduction in whole or in part without the express written permission of SARGENT Manufacturing Company is prohibited.

Experience a safer and more open world

SARGENT
ASSA ABLOY

4		Optional Installation	14
	a	Dogging Indicator Installation	14
5		Addendum	17
	a	Check Door	17
	b	Place Door Horizontal on Sawhorse	17
	c	Install Lockbody Cassette (LBC)	18
	d	Latch Rod Guides	18
	e	Feed Top Rod into Door	19
	f	Align with Lockbody Cassette (LBC)	19
	g	Troubleshoot Latch Installation	20
	h	Correct Rod Installation Check	20
	i	Secure Top Latch	21
	j	Tighten Set Screw	21
	k	Bottom Latch Installation	22
	l	Check Latch	22
	m	Mortise Reinforcer and Mortise Lock Installation	23
	n	Final Installation	23

Copyright © 2017, 2019, SARGENT Manufacturing Company. All rights reserved. Reproduction in whole or in part without the express written permission of SARGENT Manufacturing Company is prohibited.

Experience a safer and more open world

1 Package Contents

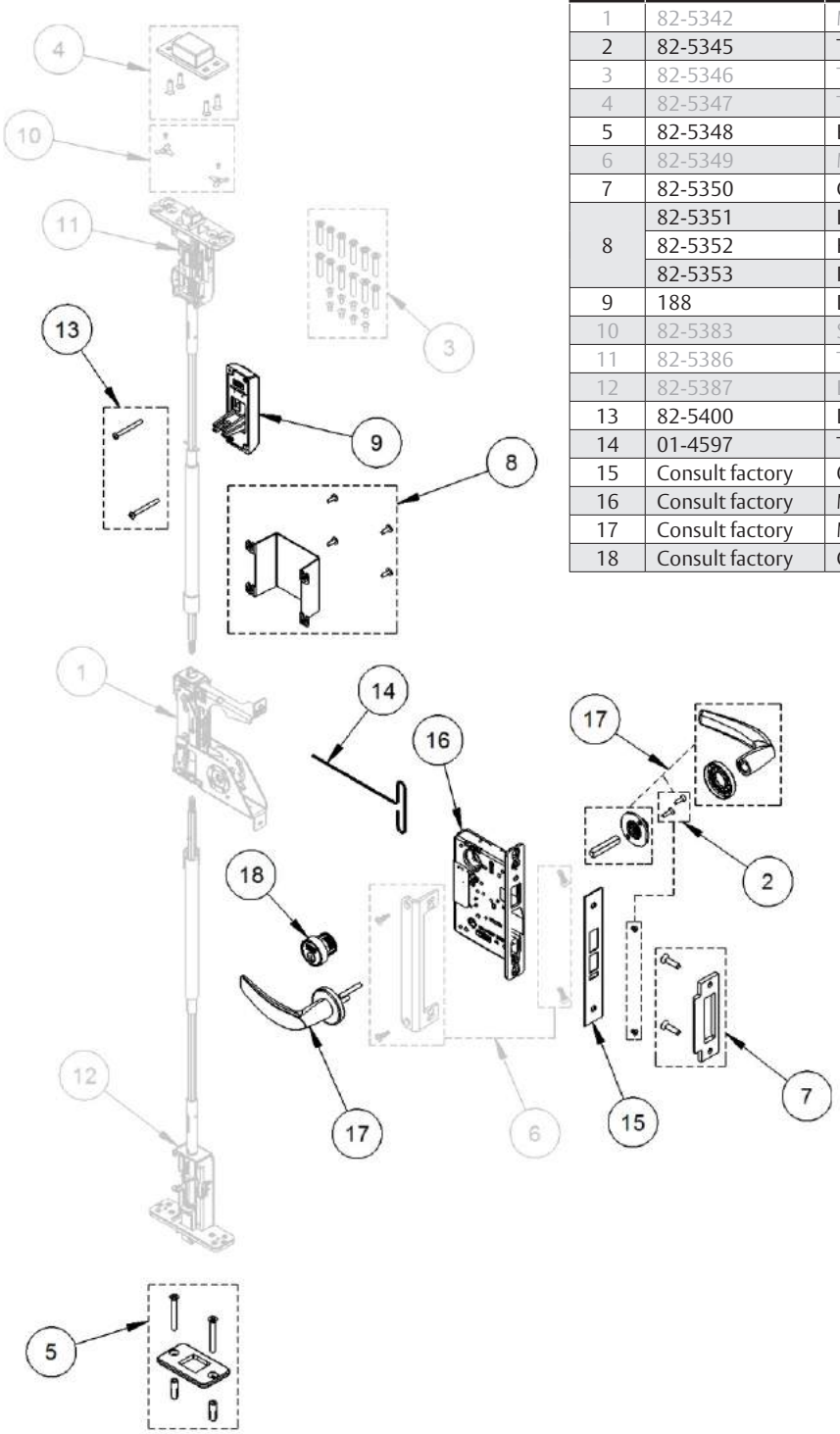

	Part Number	Description
1	82-5342	Multipoint cassette
2	82-5345	Trim mounting screw pack
3	82-5346	Top/bottom case mounting screw pack
4	82-5347	Top strike pack
5	82-5348	Bottom strike pack
6	82-5349	Mortise mounting/reinforcement pack
7	82-5350	Center strike pack
8	82-5351	IN/PN Inside cover shield pack
	82-5352	Harmony inside cover shield pack
	82-5353	Passport inside cover shield pack
9	188	Dogging indicator (includes item 13) (specify finish)
10	82-5383	Screw retainer pack
11	82-5386	Top case and rod assembly (specify door size)
12	82-5387	Bottom case and rod assembly (specify door size)
13	82-5400	Dogging indicator screw pack (specify finish)
14	01-4597	T-wrench, adjustment
15	Consult factory	Outside armor front
16	Consult factory	Mortise lock
17	Consult factory	Mortise trim
18	Consult factory	Cylinder

Note:
The grayed parts are preinstalled by the door manufacturer and relate to the Addendum section beginning on page 16.

Copyright © 2017, 2019, SARGENT Manufacturing Company. All rights reserved. Reproduction in whole or in part without the express written permission of SARGENT Manufacturing Company is prohibited.

SARGENT
ASSA ABLOY

2 Tools Required

Tape measure

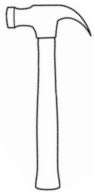
Hammer

Flashlight

1/8" Allen (supplied)

3/32" Allen (supplied)

5/32" Allen

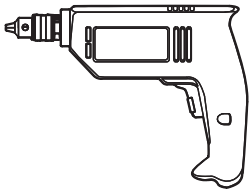
Drill

1/8" Masonry drill bit

#3 Phillips bit

Slotted screwdriver

#1, #2, #3 Phillips head screwdrivers

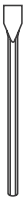
Chisel

3/8" Anchor set

a Tools Required for Electronic Access Control (EAC) Shield

#29 Drill bit (.136")

#8-32 Tap

b Tools Required for Dogging Indicator Option

#7 Drill bit (.201")

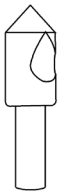
82° Countersink

Copyright © 2017, 2019, SARGENT Manufacturing Company. All rights reserved. Reproduction in whole or in part without the express written permission of SARGENT Manufacturing Company is prohibited.

Experience a safer and more open world

SARGENT
ASSA ABLOY

3 Installation

a Check Door

Verify the door is:

- Correct size and hand for opening.
- Correctly prepared to Template 4740.

IMPORTANT
If measurement is incorrect, DO NOT PROCEED WITH INSTALLATION. Contact door manufacturer.

(Figure 1)

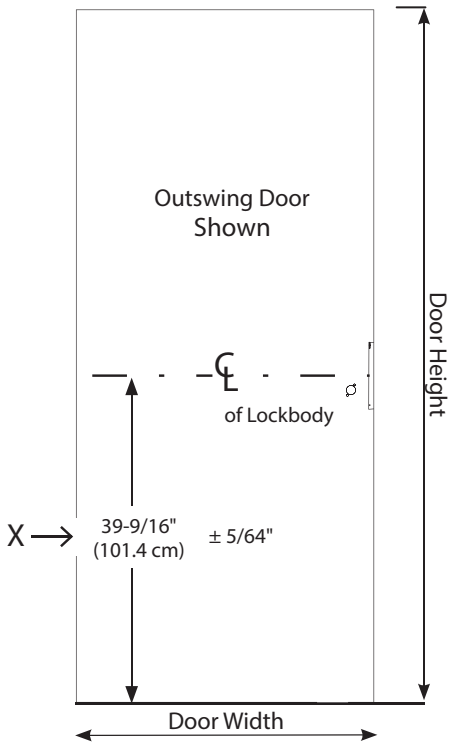

Figure 1

b Door Installation

Hang the door on the frame.

IMPORTANT
If the door rubs along the floor, do not complete this installation! Contact door manufacturer.

c Install Top Strike into Door Frame

- Remove plastic strike filler and discard.

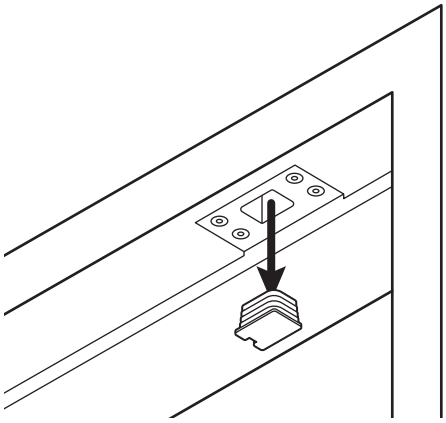

Figure 2

Copyright © 2017, 2019, SARGENT Manufacturing Company. All rights reserved. Reproduction in whole or in part without the express written permission of SARGENT Manufacturing Company is prohibited.

Experience a safer and more open world

SARGENT
ASSA ABLOY

3 Installation (cont.)

d Install Center Strike into Door Frame

- Install two (2) ¼-20 socket cap flat head screws. (Figure 3)

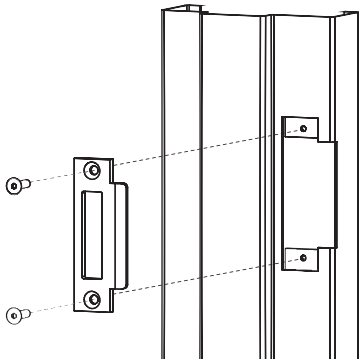

Figure 3

e Remove Retractor Inserts

WARNING
The door now has the ability to latch.

(Figure 4)

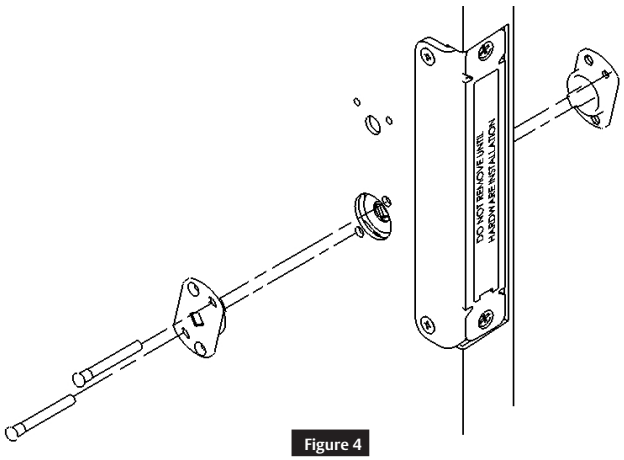

Figure 4

f Check Latches (uninstalled)

- Insert the uninstalled outside mortise trim and rotate to verify the top and bottom latches retract flush with the door. Do not install mortise trim at this time. (Figure 5)

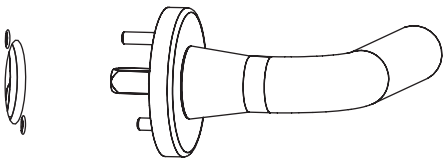

Figure 5

- Move the top strike back and forth until the top latch engages the strike. (Figure 6)

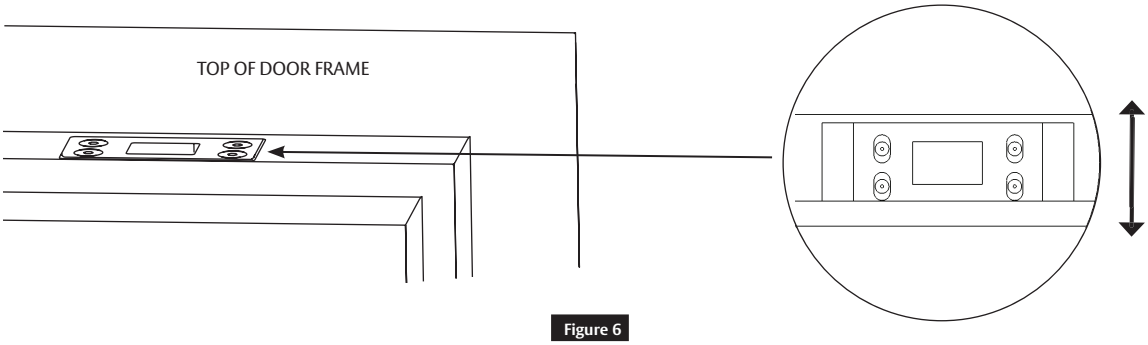

Figure 6

Copyright © 2017, 2019, SARGENT Manufacturing Company. All rights reserved. Reproduction in whole or in part without the express written permission of SARGENT Manufacturing Company is prohibited.

Experience a safer and more open world

3 Installation (cont.)

g Install Bottom Strike

- Close the door and mark the location of the bottom bolt.

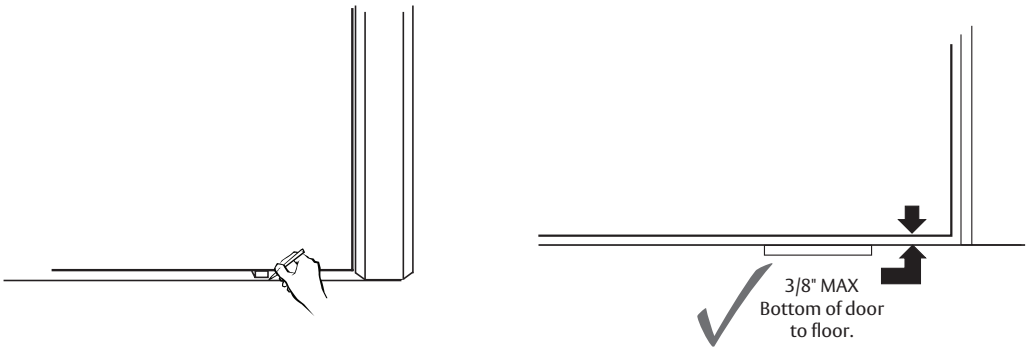

Figure 7

- Open the door and place the strike over the bottom bolt location. Mark the location of the bottom strike pocket and hole locations. (Figure 7)

Note:
The strike is **not** symetric. Install as shown. If needed, the strike can later be rotated to increase bolt clearance. (Figure 8)

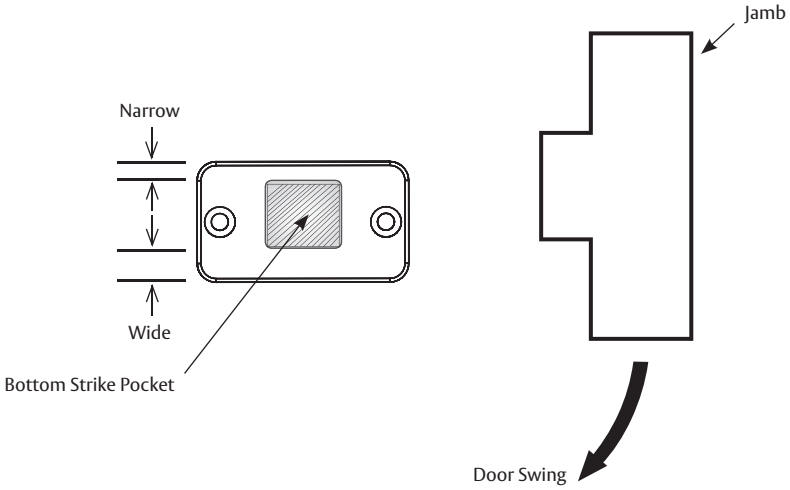

Figure 8

Copyright © 2017, 2019, SARGENT Manufacturing Company. All rights reserved. Reproduction in whole or in part without the express written permission of SARGENT Manufacturing Company is prohibited.

Experience a safer
and more open world

SARGENT
ASSA ABLOY

3 Installation (cont.)

g Install Bottom Strike (cont.)

Flush Mount (Figure 9)

Mortise the strike into the floor 1/4" deep.

(Optional for 3/8" door to floor gap.)

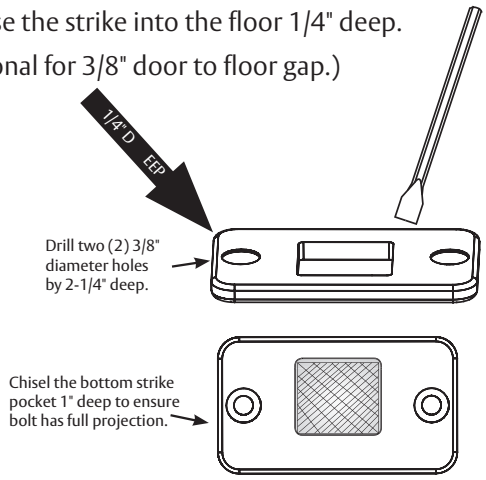

Figure 9

IMPORTANT

Use a vacuum or compressed air to clear holes of debris. (Figure 10)

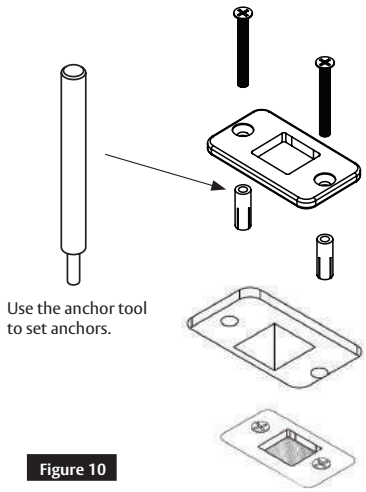

Figure 10

Cross Sectional View
Flush Mount (Figure 11)

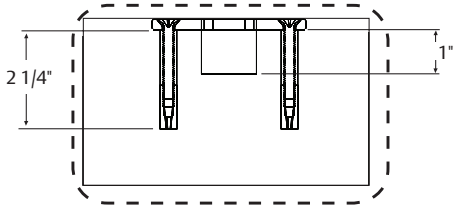

Figure 11

Surface Mount (Figure 12)

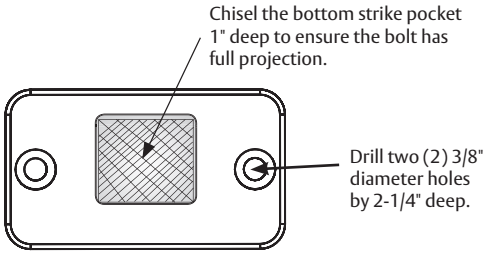

Figure 12

IMPORTANT

Use a vacuum or compressed air to clear holes of debris. (Figure 13)

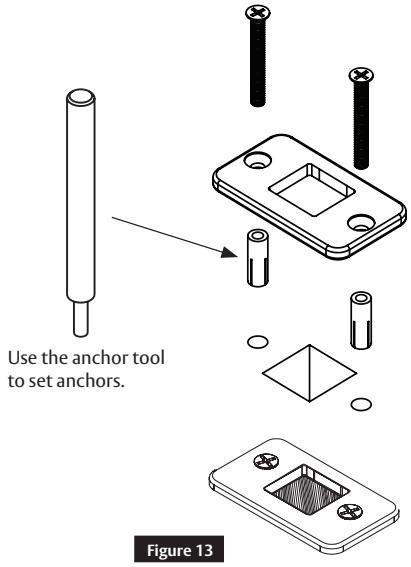

Figure 13

Cross Sectional View
Surface Mount (Figure 14)

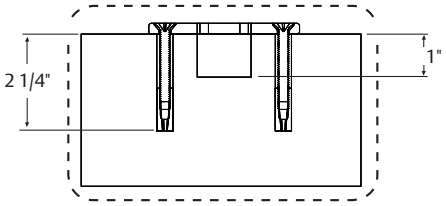

Figure 14

Copyright © 2017, 2019, SARGENT Manufacturing Company. All rights reserved. Reproduction in whole or in part without the express written permission of SARGENT Manufacturing Company is prohibited.

Experience a safer and more open world

3 Installation (cont.)

h Top and Bottom Latch Adjustment

- With the door hung, measure the clearance between the top and bottom bolts and strikes. (Figure 15)

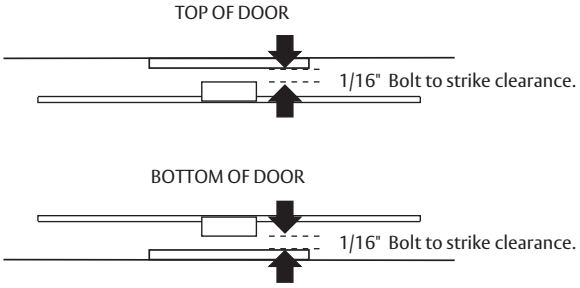

Figure 15

Note:
If both measurements equal 1/16" proceed to Step 3i, otherwise proceed with Step 3h as follows:

- Remove the mortise filler cap and discard. (Figure 16)

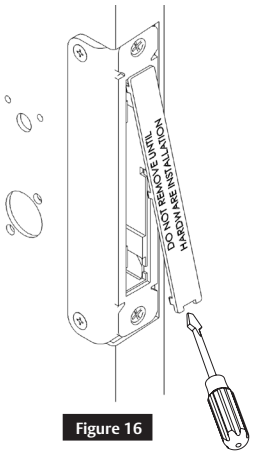

Figure 16

- Retract the latches by roting the lever and opening the door. (Figure 17)

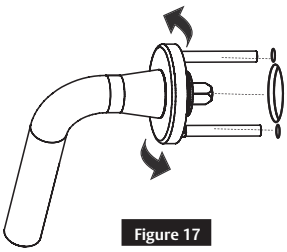
Figure 17

- Using the supplied 1/8" Allen wrench, loosen the set screw 1/4 turn maximum. This allows hex rods to rotate during the latch bolt adjustment. (Figure 18)

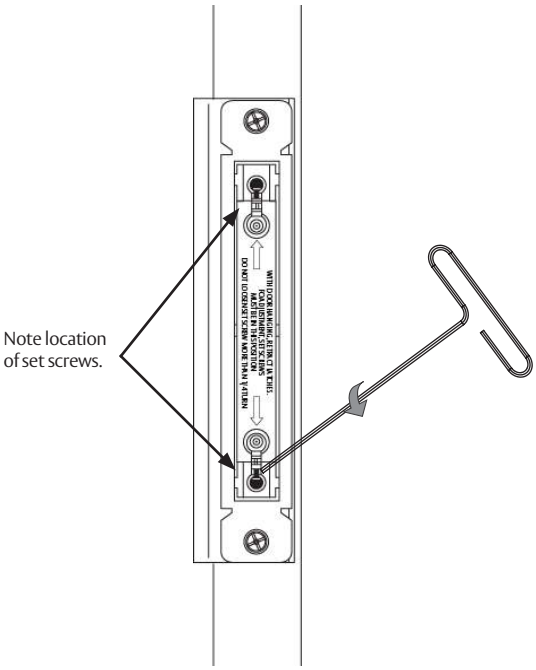

Figure 18

Copyright © 2017, 2019, SARGENT Manufacturing Company. All rights reserved. Reproduction in whole or in part without the express written permission of SARGENT Manufacturing Company is prohibited.

Experience a safer
and more open world

SARGENT
ASSA ABLOY

3 Installation (cont.)

h Top and Bottom Latch Adjustment (cont.)

Using the supplied 3/32" Allen wrench, rotate the top or bottom worm gears according to the directions below (Figure 19). Bolt to strike clearance should equal 1/16". This sets the bolt projection. (Figure 20)

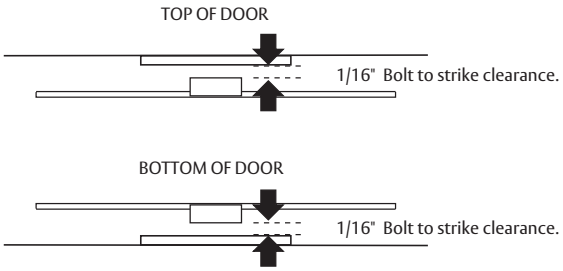

Figure 19

Note:
Ten (10) turns equals approximately 1/16".

Rotate the top: counterclockwise ↺ to project the bolt; clockwise ↻ to retract the bolt.

Rotate the bottom: counterclockwise ↺ to retract the bolt; clockwise ↻ to project the bolt.

Note:
Latches have bottomed if worm gears click.

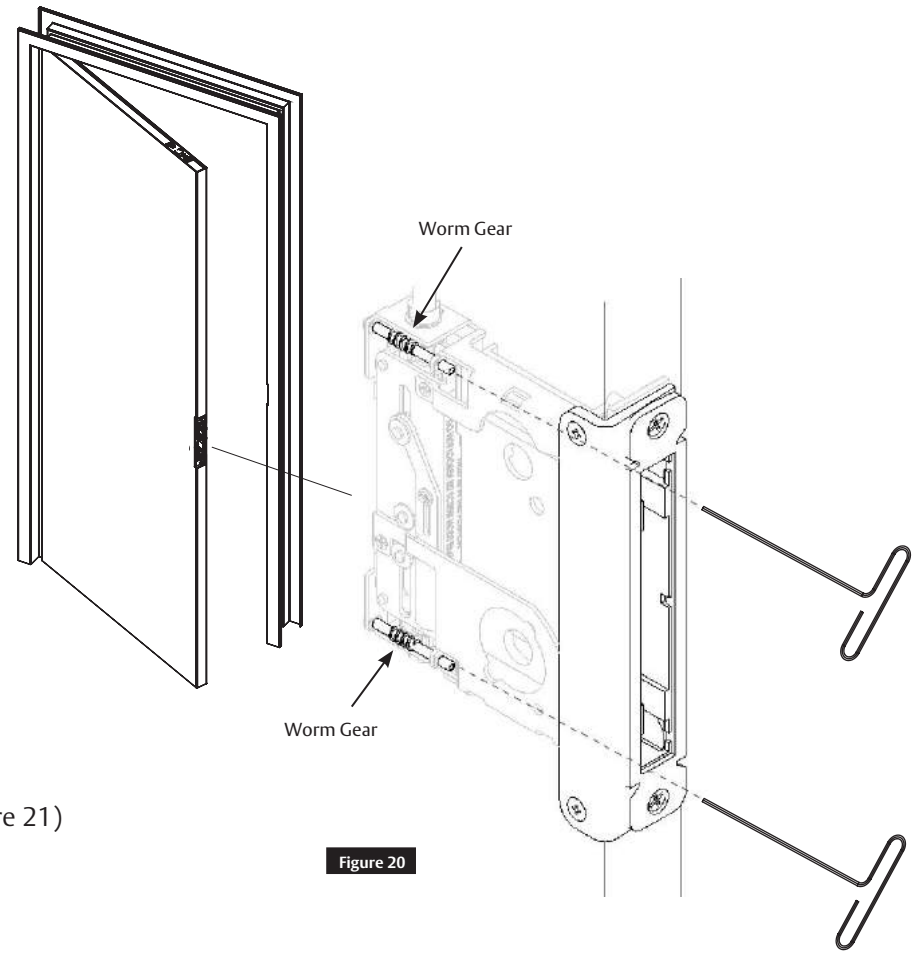

Figure 20

Tighten set screws. (Figure 21)

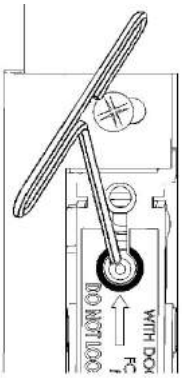
Figure 21

IMPORTANT
Set screws must be fully tightened after adjustment.

Copyright © 2017, 2019, SARGENT Manufacturing Company. All rights reserved. Reproduction in whole or in part without the express written permission of SARGENT Manufacturing Company is prohibited.

Experience a safer and more open world

SARGENT
ASSA ABLOY

3 Installation (cont.)

i Mortise Lock Install

- Remove the two (2) #12-24 x1" flat head mounting screws. (Figure 22)

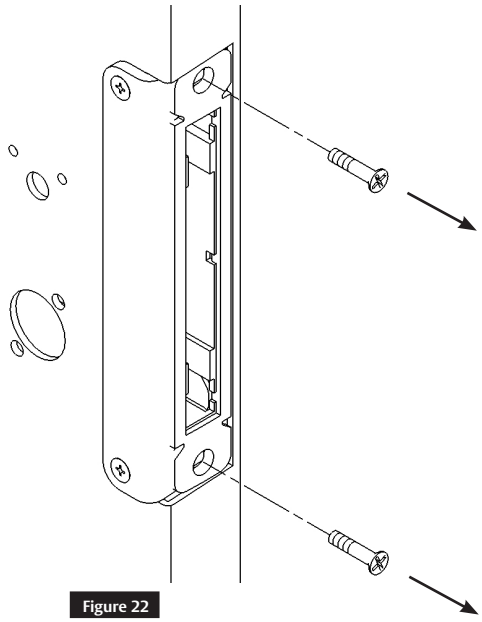

Figure 22

- Remove the mortise lock filler and discard. (Figure 23)

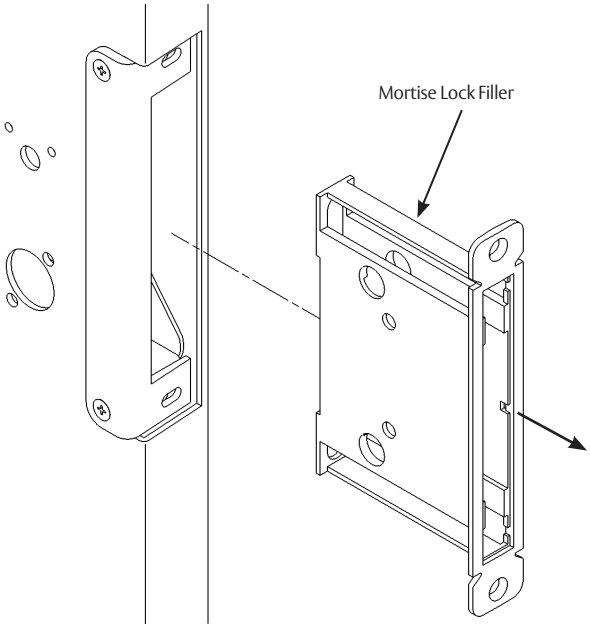

Figure 23

- Install the mortise lock, two (2) #12-24 x1" flat head mounting screws, outside front, and two (2) #8-32 x1/4" flat head screws. (Figure 24)

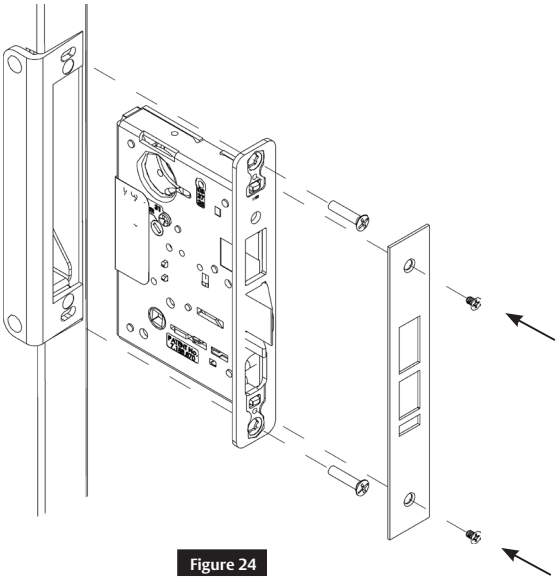

Figure 24

Copyright © 2017, 2019, SARGENT Manufacturing Company. All rights reserved. Reproduction in whole or in part without the express written permission of SARGENT Manufacturing Company is prohibited.

Experience a safer and more open world

SARGENT
ASSA ABLOY

3 Installation (cont.)

j Final Mortise Lock and Trim Installation

Follow the supplied mortise lock installation instructions for trim and other function related hardware.

k Electronic Access Control (EAC) Reader and Controller Installation

Follow supplied EAC Installation Instructions (if applicable).

l Deadbolt Label Installation (FM7300 Only)

Install the deadbolt label on the inside of the door. (Figure 25)

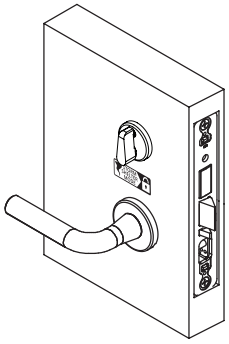

Figure 25

m Key Override with Deadbolt Function Operation Check

Verify hand and bevel of door to determine direction to rotate key and lever. Stand on outside of locked door when determining door hand. (Figure 26)

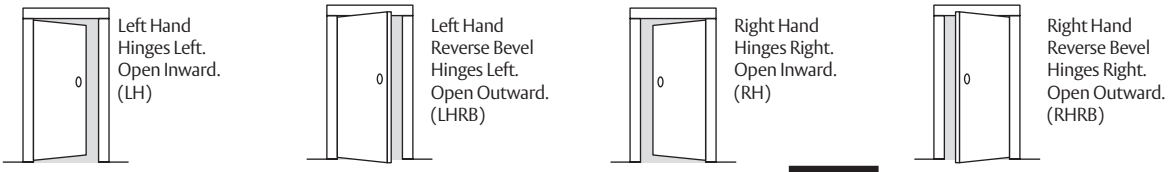

Figure 26

1. Rotate key to retract latch and hold. (Do not touch lever).
2. Continue holding key, rotate lever with other hand and open door. (Figure 27)

Note:
Graphic is for reference only; it does not represent all door hand options.

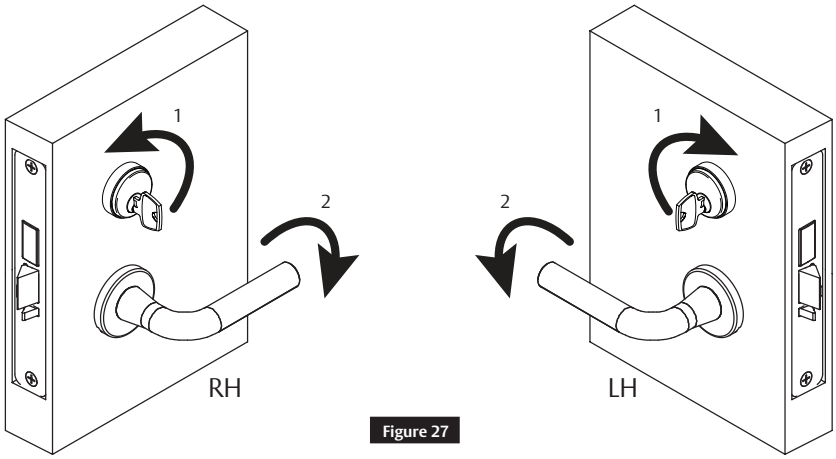

Figure 27

Copyright © 2017, 2019, SARGENT Manufacturing Company. All rights reserved. Reproduction in whole or in part without the express written permission of SARGENT Manufacturing Company is prohibited.

Experience a safer and more open world

3 Installation (cont.)

n Electronic Access Control (EAC) Shield (if applicable)

- Install the EAC shield (provided) over the inside controller. (Figure 28)
- Drill and tap the door for #8-32 machine screws (provided).

IMPORTANT
EAC shield MUST be centered on controller.

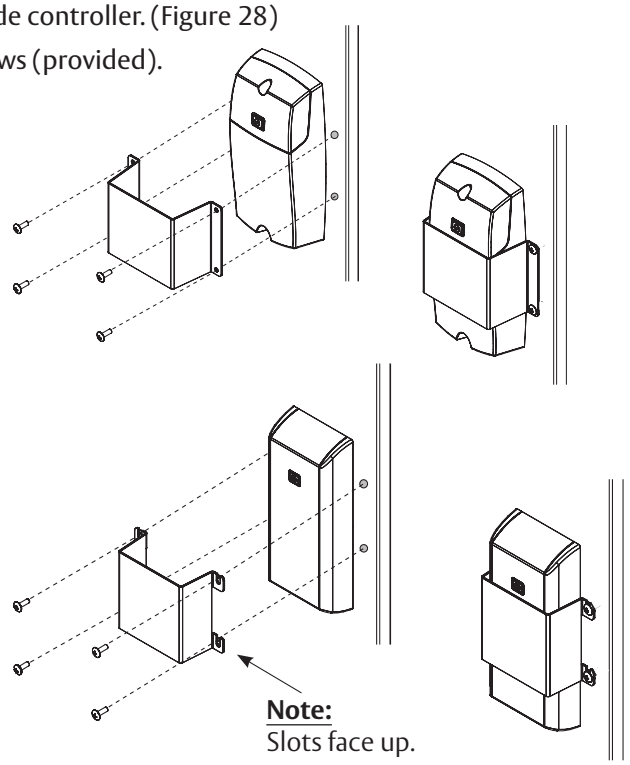

Figure 28

4 Optional Installation

a Dogging Indicator Installation

- Ensure the door is latched and all bolts are projected.
- Place the plastic field template on the pin in the top rod through the oval cut-out in the door. (Figure 29)

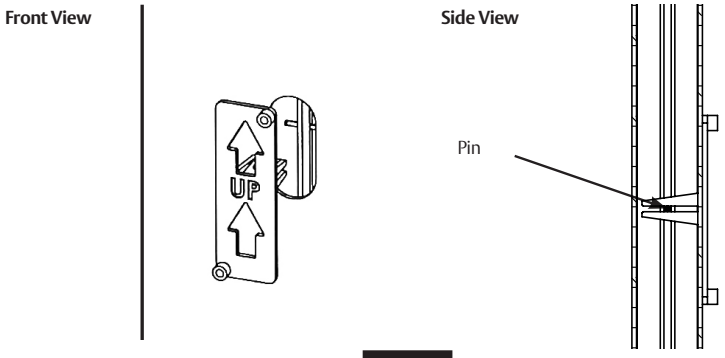

Figure 29

Copyright © 2017, 2019, SARGENT Manufacturing Company. All rights reserved. Reproduction in whole or in part without the express written permission of SARGENT Manufacturing Company is prohibited.

Experience a safer and more open world

SARGENT
ASSA ABLOY

4 Optional Installation (cont.)

a Dogging Indicator Installation (cont.)

- Using a #7 drill bit, drill two (2) holes completely through the door, making sure the drill remains square to the face of the door. (Figure 30)

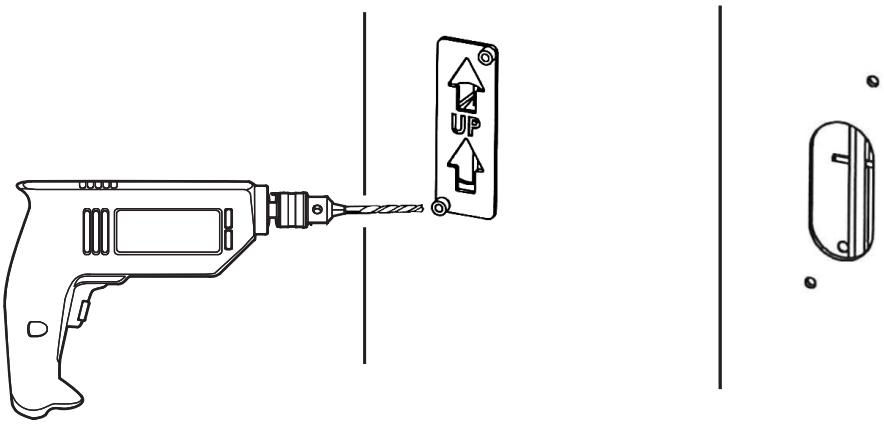

Figure 30

- Countersink holes on the opposite face of the door to fit the supplied oval head screws. (Figure 31)

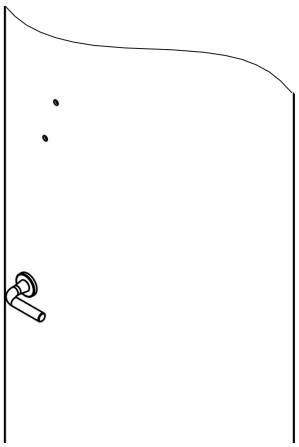

Figure 31

Copyright © 2017, 2019, SARGENT Manufacturing Company. All rights reserved. Reproduction in whole or in part without the express written permission of SARGENT Manufacturing Company is prohibited.

Experience a safer and more open world

4 Optional Installation (cont.)

a Dogging Indicator Installation (cont.)

Install the indicator on the inside of the door using supplied 10-24 x 2" oval head screws. Make sure the control fingers grab the top rod pin as shown. (Figure 32)

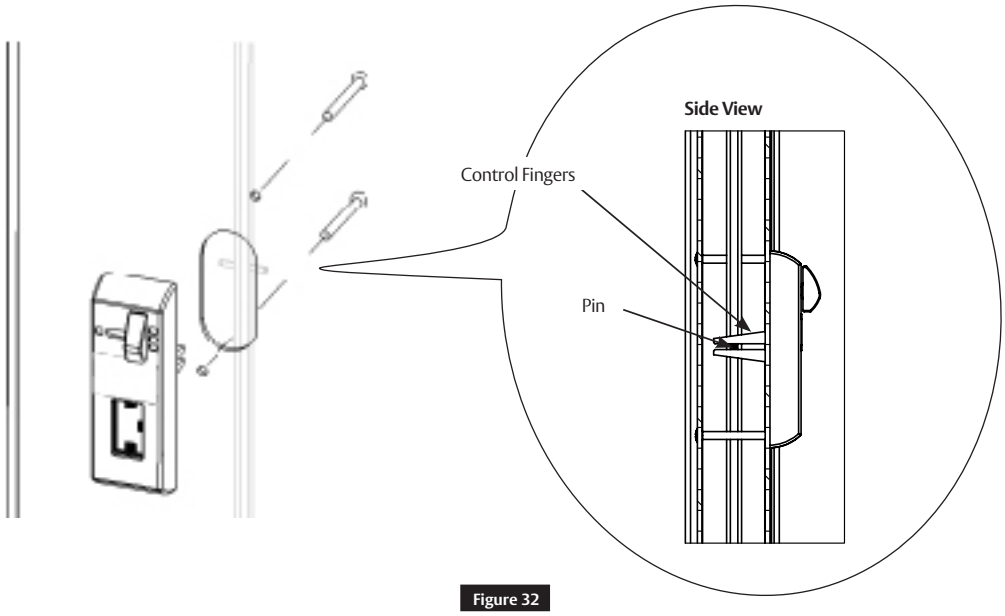

Figure 32

Check for proper operation. Rotate the lever until the indicator window shows a single latch point. (Figure 33)

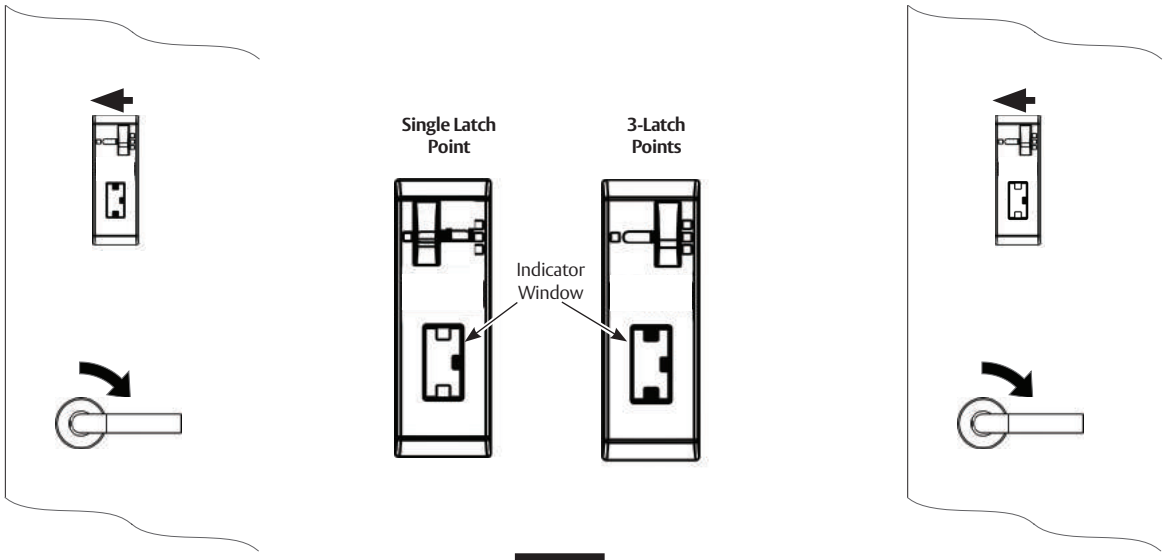

Figure 33

Note:
To dog the top and bottom latches in a retracted state, fully rotate the lever and move the slider on the indicator to the left.

Copyright © 2017, 2019, SARGENT Manufacturing Company. All rights reserved. Reproduction in whole or in part without the express written permission of SARGENT Manufacturing Company is prohibited.

Experience a safer and more open world

5 Addendum

This addendum is to be used as a reference for pre-installed hardware (latches and cassette). The following steps are for ease of reference as they have been completed in advance by the door manufacturer.

a Check Door

Verify the door is:

- Correct size and hand for opening.
- Correctly prepared to Template 4740.

(Figure 34)

IMPORTANT
If measurement is incorrect, DO NOT PROCEED WITH INSTALLATION. Contact door manufacturer.

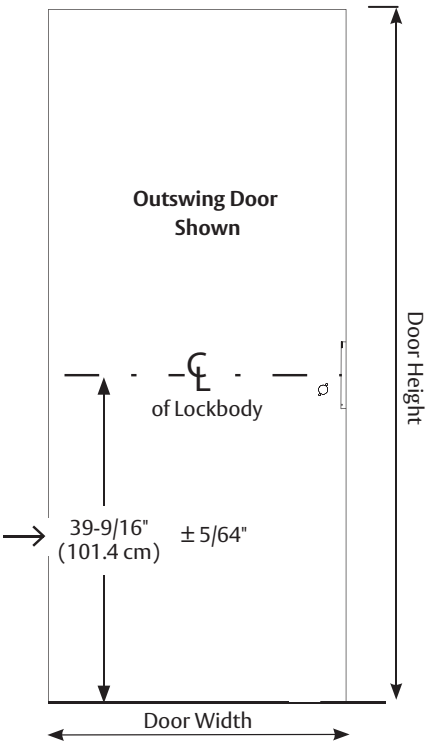

Figure 34

b Place Door Horizontal on Sawhorse

(Figure 35)

Note:
Orient the door face holes on top.

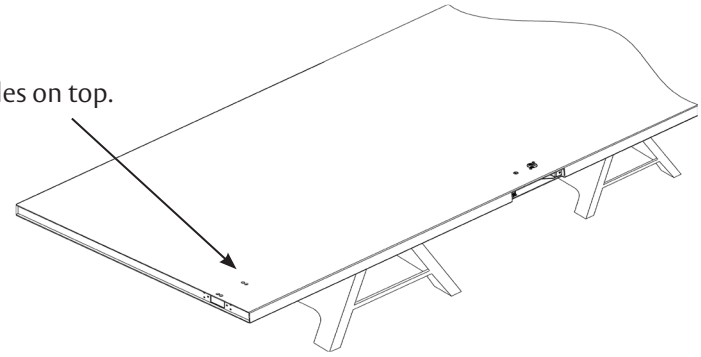

Figure 35

Copyright © 2017, 2019, SARGENT Manufacturing Company. All rights reserved. Reproduction in whole or in part without the express written permission of SARGENT Manufacturing Company is prohibited.

Experience a safer and more open world

SARGENT
ASSA ABLOY

5 Addendum (cont.)

c Install Lockbody Cassette (LBC)

- Using the supplied 3/32" Allen wrench, rotate both LBC worm gears to align slots in the LBC gears to the orientation shown. (Figure 36)

  Alignment is needed for proper installation of the rod guide. (Step 3h)

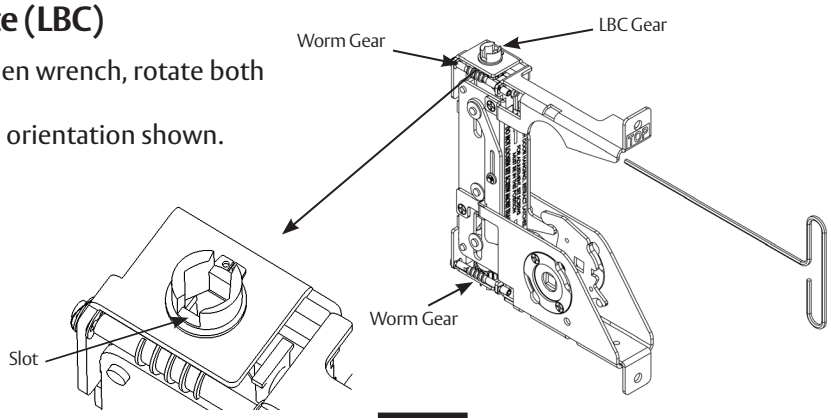

Figure 36

- Slide the LBC into the door case and secure with two (2) #12-24x1" flat head screws. (Figure 37)

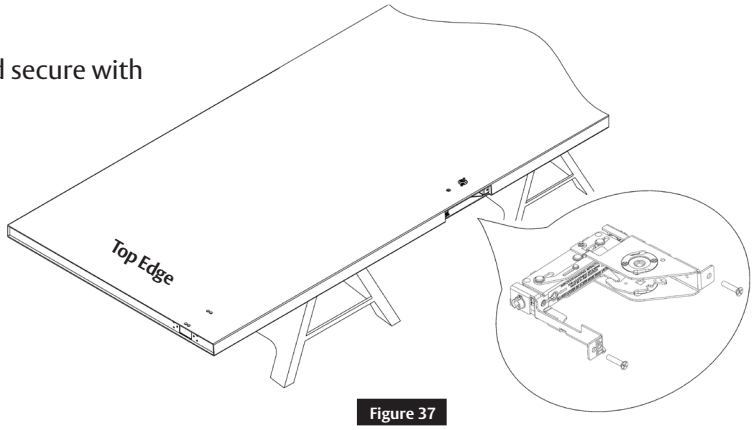

Figure 37

d Latch Rod Guides

- Rod guides help installation by directing the rod into location in the LBC within the door cavity.
- Pull rod guides away from latches on both rods until they stop. (Figure 38)

Note:
Bolt retainer clips must remain attached until step 5g.

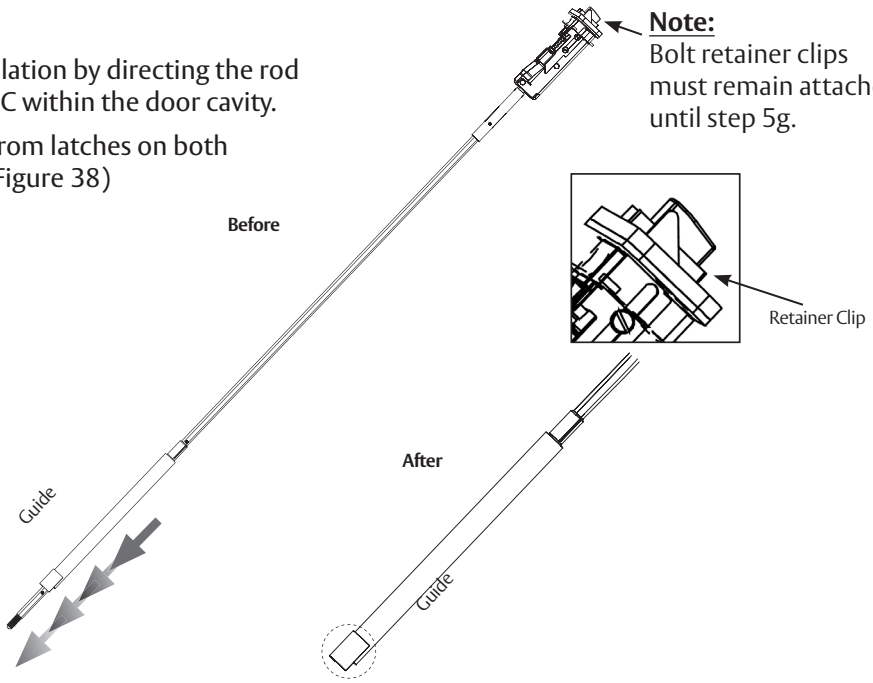

Figure 38

Copyright © 2017, 2019, SARGENT Manufacturing Company. All rights reserved. Reproduction in whole or in part without the express written permission of SARGENT Manufacturing Company is prohibited.

Experience a safer and more open world

5 Addendum (cont.)

e Feed Top Rod into Door

- Orient the latch chassis as shown. Rotate the rod and rod guide so the rod guide tab faces up. Slide the rod assembly into the door. Make sure the rod guide remains in the correct orientation with the guide tab facing up. (Figure 39)

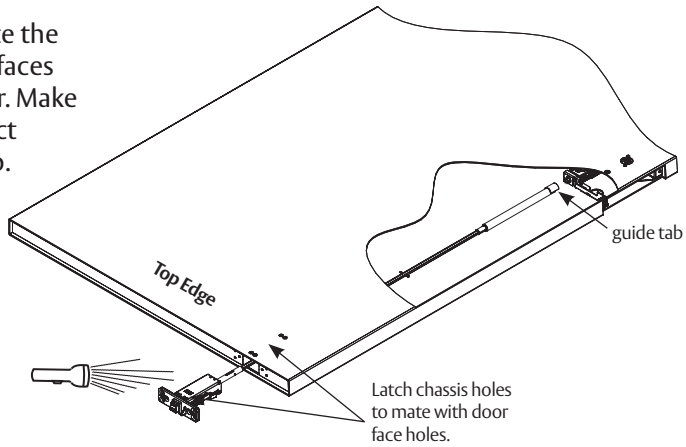

Figure 39

f Align with Lockbody Cassette (LBC)

- When approaching the LBC, slightly elevate the rod and slide the guide tab on outer diameter of the LBC gear. (Figure 40)

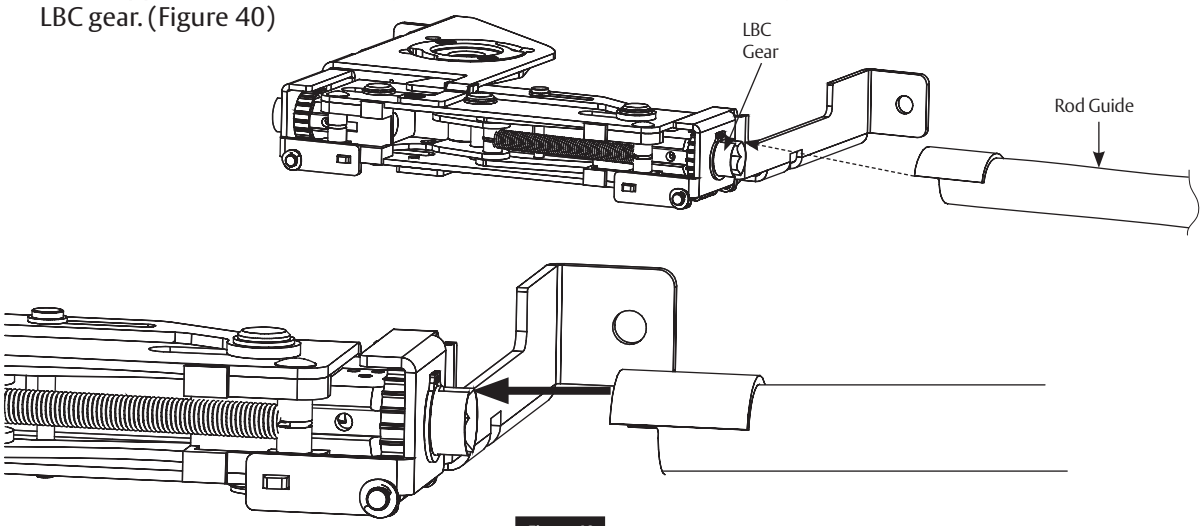

Figure 40

- To align the hex of rod with the hex of the LBC gear, fit the rod guide tab into the LBC gear slot. Once aligned, push the rod assembly in until fully seated. (Figure 41)

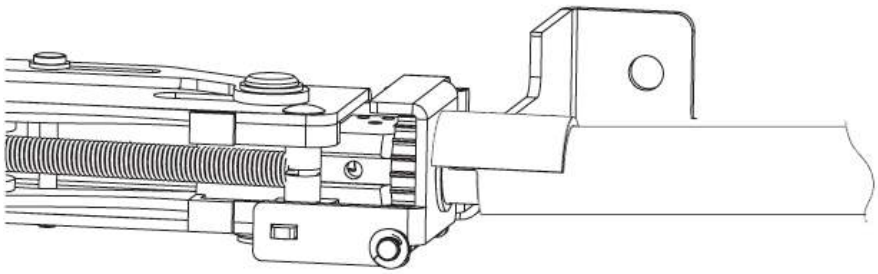

Figure 41

Copyright © 2017, 2019, SARGENT Manufacturing Company. All rights reserved. Reproduction in whole or in part without the express written permission of SARGENT Manufacturing Company is prohibited.

Experience a safer and more open world

SARGENT
ASSA ABLOY

5 Addendum (cont.)

g Troubleshoot Latch Installation

- If the latch will not fully seat in the door, rod or rod guide is not aligned properly with LBC gear. (Figure 42)

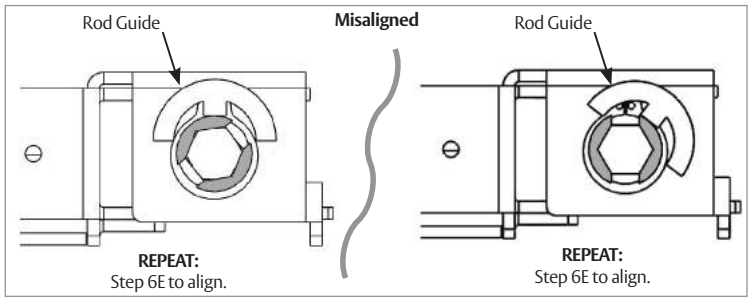

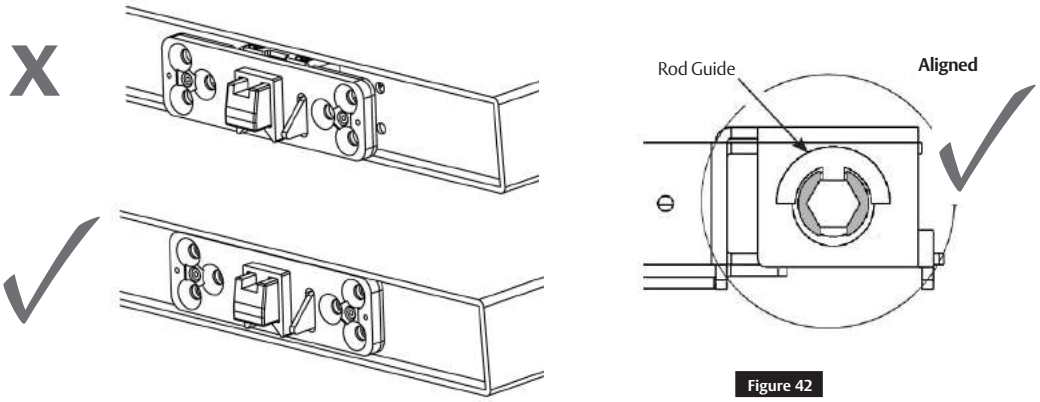

Figure 42

h Correct Rod Installation Check

- Be certain a portion of the red end of the rod can be seen in the LBC viewing window and set screw is in the location shown. (Figure 43)

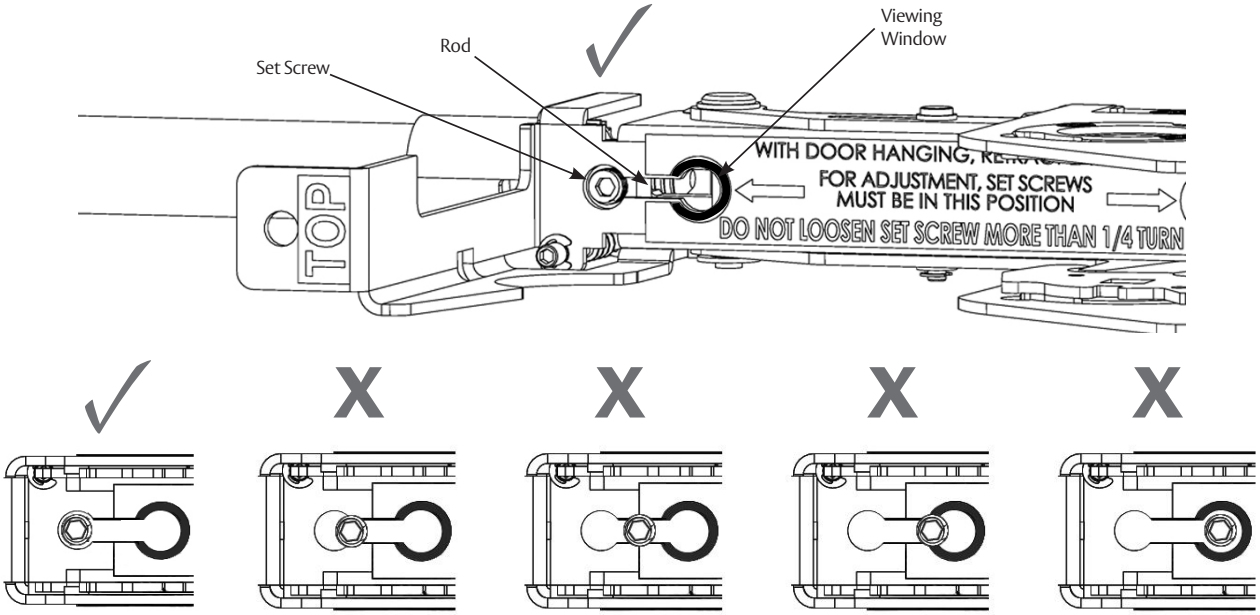

Figure 43

Copyright © 2017, 2019, SARGENT Manufacturing Company. All rights reserved. Reproduction in whole or in part without the express written permission of SARGENT Manufacturing Company is prohibited.

Experience a safer and more open world

SARGENT
ASSA ABLOY

5 Addendum (cont.)

i Secure Top Latch

- Install four (4) 10-24 oval head screws on the face of the door. (Figure 44)

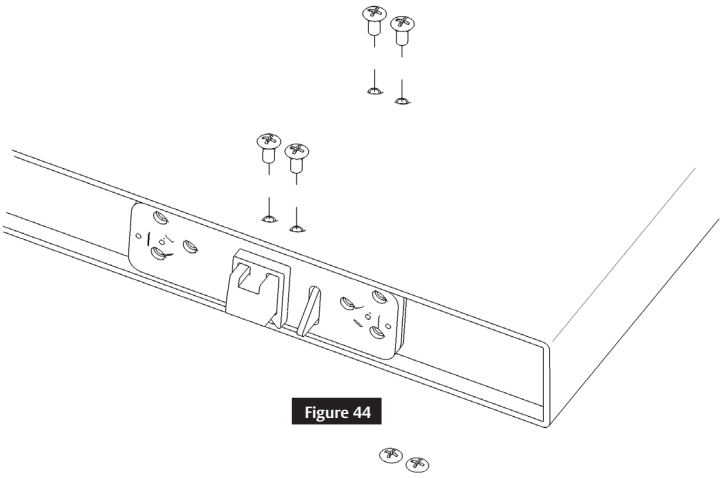

Figure 44

- Install six (6) 1/4-20 flat head screws in the top edge of the door. (Figure 45)

Note:
Do not fully tighten until all screws are installed.

- Install two (2) screw retainers (top latch only).
- Install two (2) #4-40 flat head screws (top latch only).

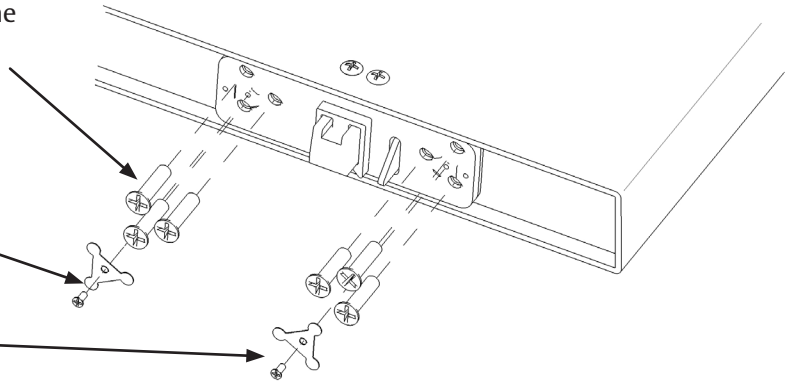

Figure 45

j Tighten Set Screw

Using the supplied 1/8" Allen wrench, tighten the set screw to secure the rod to the LBC. (Figure 46)

IMPORTANT
Latches will not retract if the set screw is not tightened.

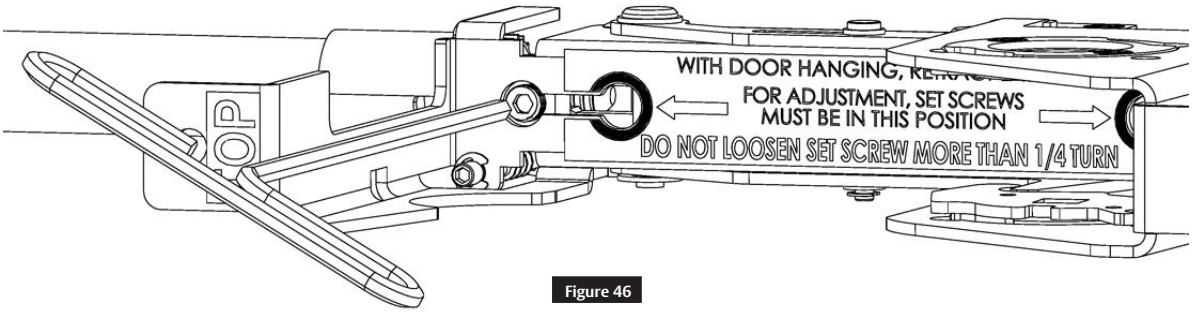

Figure 46

Copyright © 2017, 2019, SARGENT Manufacturing Company. All rights reserved. Reproduction in whole or in part without the express written permission of SARGENT Manufacturing Company is prohibited.

Experience a safer and more open world

SARGENT
ASSA ABLOY

5 Addendum (cont.)

k Bottom Latch Installation

REPEAT

Steps 5e through 5k to install bottom latch. (Figure 47)

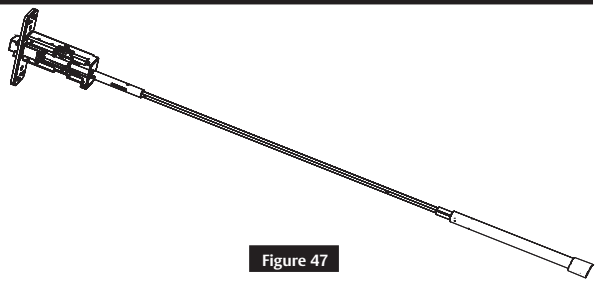

Figure 47

l Check Latch

- Remove the bolt retainer clips from the top and bottom latch assemblies. (Figure 48)

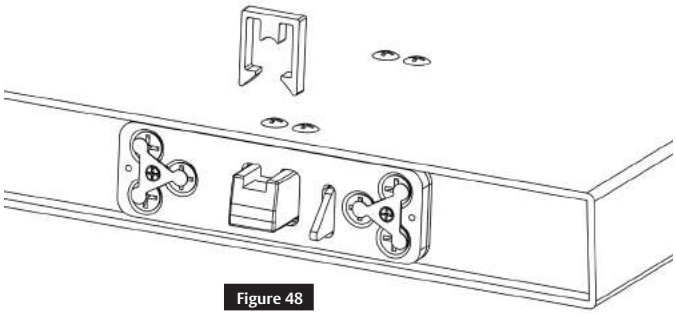

Figure 48

- Insert mortise trim in the door prep and cassette and rotate to verify latches fully retract (Figure 49). Confirm the set screw moves from circle to circle in the LBC viewing window (Figure 50). Do not install the mortise lock at this time.

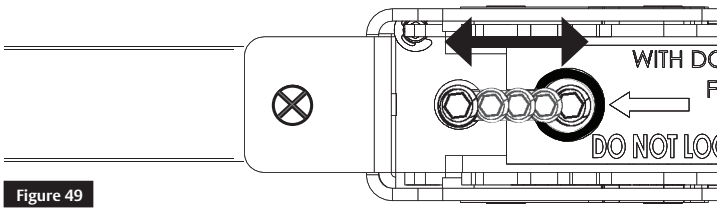

Figure 49

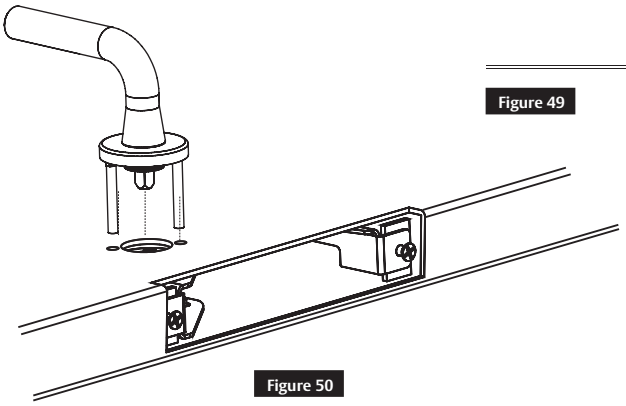

Figure 50

Note:
Push the black plunger on the top latch to project bolts. (Figure 51)

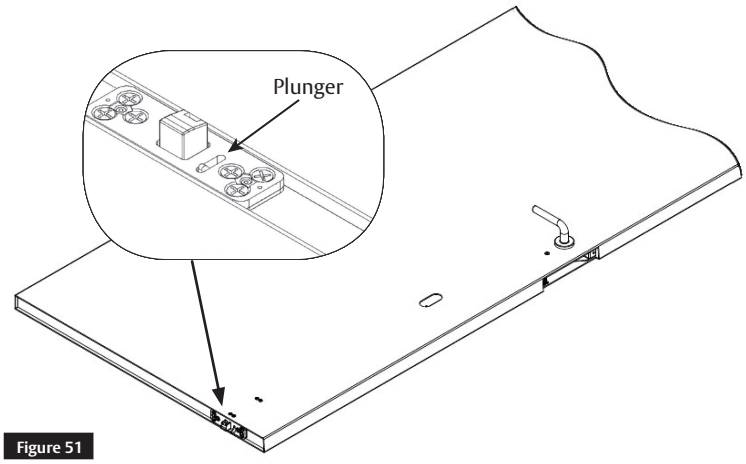

Figure 51

Copyright © 2017, 2019, SARGENT Manufacturing Company. All rights reserved. Reproduction in whole or in part without the express written permission of SARGENT Manufacturing Company is prohibited.

Experience a safer and more open world

5 Addendum (cont.)

m Mortise Reinforcer and Mortise Lock Installation

- Remove the two (2) #12-24x1" flat head LBC mounting screws that are securing the lockbody case in the door. (Figure 52)
- Place mortise reinforcer into the door.
- Reinstall two (2) #12-24x1" flat head LBC mounting screws (DO NOT FORCE).
- Install two (2) #12x1/4" self tapping screws through mortise reinforcer into the face of the door. (Figure 53)

Note:
Reinforcer lip belongs on the side of the door that has a special cutout at the door edge.

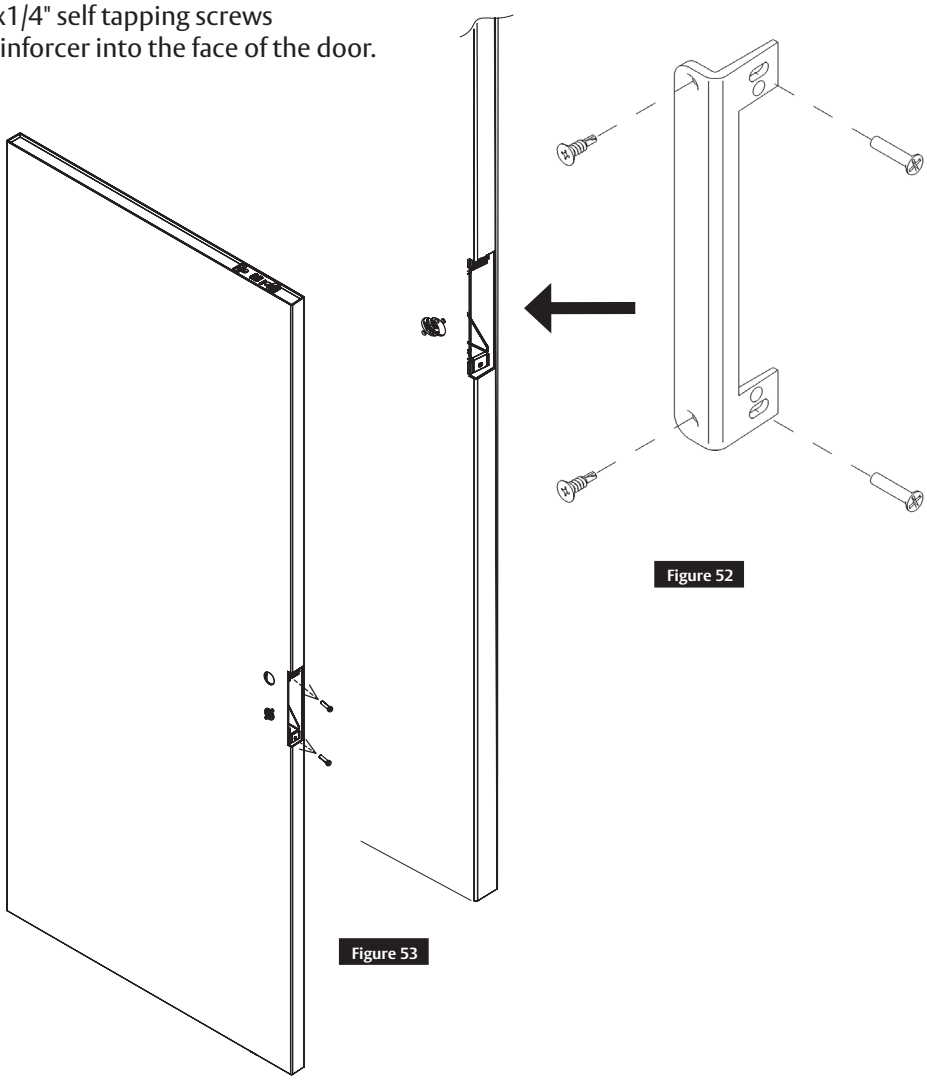

Figure 52

Figure 53

n Final Installation

Refer to Section 3 "Installation" on page 6

Copyright © 2017, 2019, SARGENT Manufacturing Company. All rights reserved. Reproduction in whole or in part without the express written permission of SARGENT Manufacturing Company is prohibited.

Experience a safer and more open world

The ASSA ABLOY Group is the global leader in access solutions. Every day, we help billions of people experience a more open world.

ASSA ABLOY Opening Solutions leads the development within door openings and products for access solutions in homes, businesses and institutions. Our offering includes doors, frames, door and window hardware, locks, perimeter fencing, access control and service.

SARGENT Manufacturing Company
100 Sargent Drive
New Haven, CT 06511 USA
800-727-5477
www.sargentlock.com

Founded in the early 1800s, SARGENT® is a market leader in locksets, cylinders, door closers, exit devices, electro-mechanical products and access control systems for new construction, renovation, and replacement applications. The company's customer base includes commercial construction, institutional, and industrial markets.

Copyright © 2017, 2019, SARGENT Manufacturing Company. All rights reserved. Reproduction in whole or in part without the express written permission of SARGENT Manufacturing Company is prohibited.

A8220D
10/19