PICTURE WINDOW - NON IMPACT

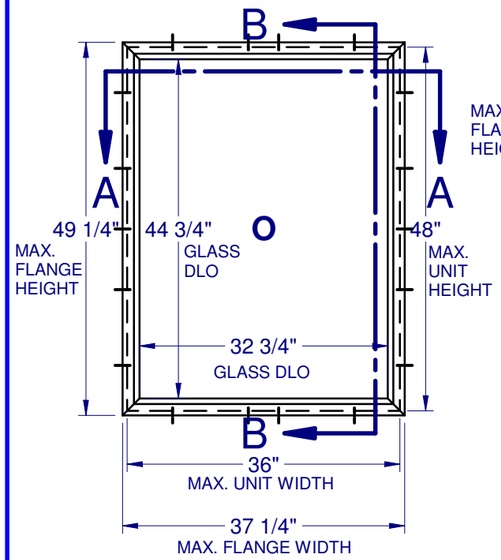

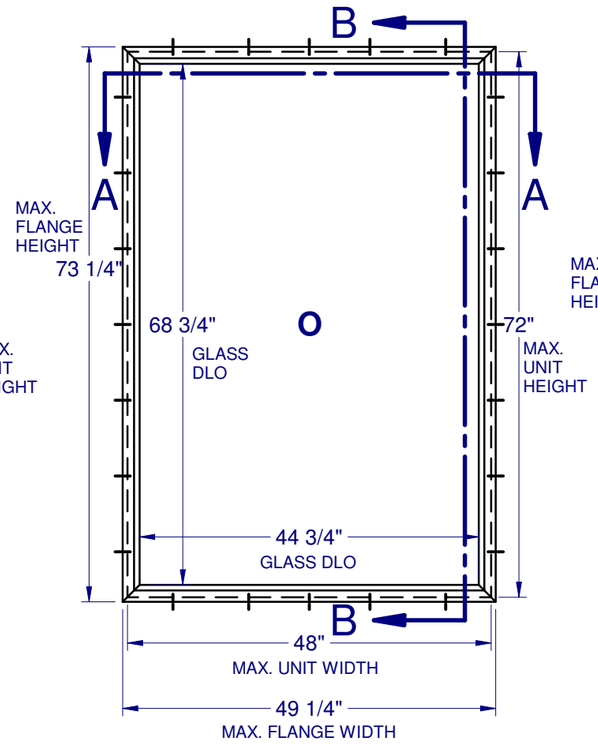

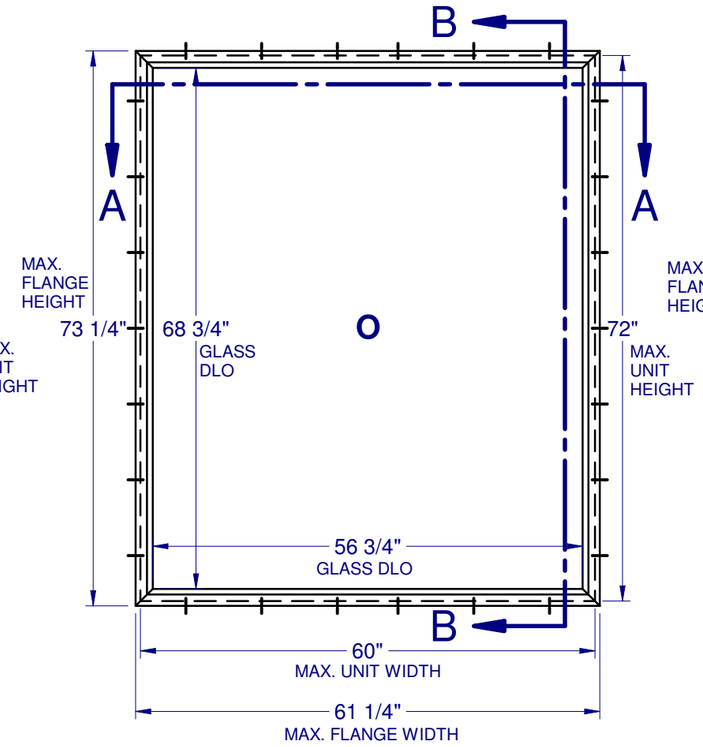

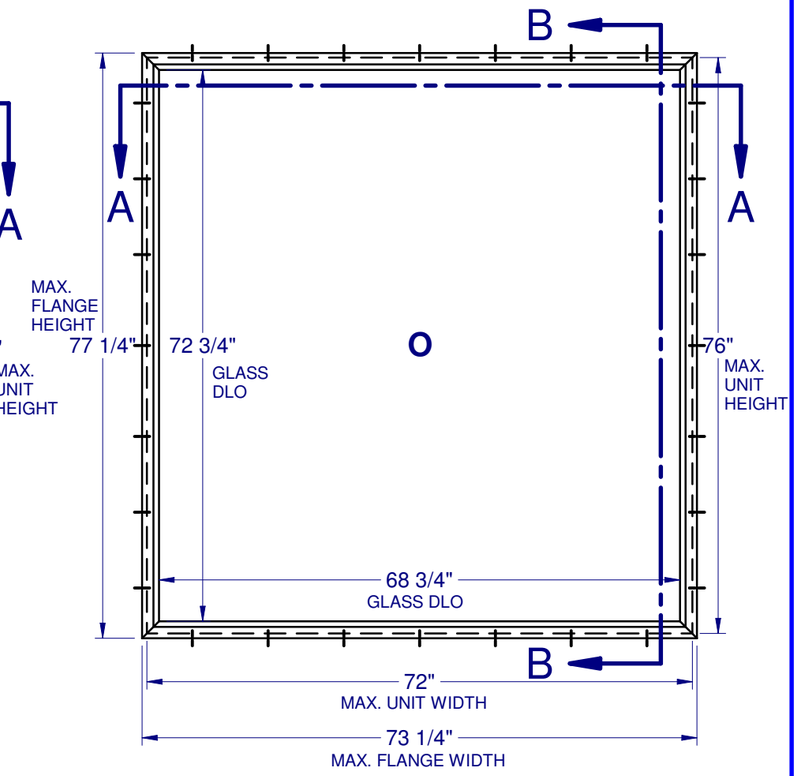

GENERAL NOTES:

1.) THE PRODUCT SHOWN HEREIN IS DESIGNED AND MANUFACTURED TO COMPLY WITH THE FLORIDA BUILDING CODE (FBC),CURRENT EDITION INCLUDING THE HIGH VELOCITY HURRICANE ZONE (HVHZ).

2.) GLAZING OPTIONS: (SEE SHT. 5)

3.) CONFIGURATIONS: O

4.) DESIGN PRESSURE RATING:
-NEGATIVE DESIGN LOADS BASED ON TESTED PRESSURE AND GLASS TABLES ASTM E-1300-04/09.
-POSITIVE DESIGN LOADS BASED ON TESTED PRESSURE, WATER INFILTRATIONTEST RESSURE AND ASTM E-1300-04/09.

5.) ANCHORAGE: THE 33 $\frac{1}{3}$% STRESS INCREASE HAS NOT BEEN USED IN THE DESIGN OF THIS PRODUCT. SEE SHEET 12 FOR ANCHOR DETAILS. WINDLOAD DURATION FACTOR Cd=1.6 WAS USED FOR WOOD ANCHOR CALCULATIONS.

6.) NOT APPROVED FOR IMPACT RESISTANCE. IMPACT PROTECTIVE SYSTEM IS REQUIRED IN WINDBORNE DEBRIS REGION.

7.) ALL FRAMES AND VENTS FULLY WELDED.

8.) SERIES / MODEL DESIGNATION: PW-300.

9.) THE DESIGNATION "X" OR "O" STAND FOR THE FOLLOWING:
"X" = OPERABLE SASH, "O" = FIXED.

10.) SECTION CALLOUTS APPLY TO ALL ELEVATIONS IN A SIMILAR LOCATION.

MAX. UNIT FLANGE WINDOW SIZE	DESIGN PRESSURE RATING	IMPACT RATING
36" x 48"	+55.0 / -55.0 PSF	NONE
48" x 72"	+55.0 / -55.0 PSF	NONE
60" x 72"	+50.0 / -50.0 PSF	NONE
72" x 76"	+40.0 / -40.0 PSF	NONE

TABLE OF CONTENTS:

GENERAL NOTES & ELEVATIONS.....1
FIN ELEVATIONS.....2
ARCHITECTURAL SHAPES.....3
SECTION VIEWS.....4
GLAZING DETAILS.....5
COMPARATIVE ANALYSIS CHART.....6
ANCHOR SCHEDULE & NOTES, FLG. & BOX...7
ANCHOR SCHEDULE & NOTES, FIN.....8
EXTRUSIONS & B.O.M.....9
INSTALLATION DETAILS., FLANGE 10
INSTALLATION DETAILS, BOX.....11
INSTALLATION DETAILS, FIN.....12

LUCAS A. TURNER, FL. P.E. 58201

Lucas Turner
2020.10.01
17:45:45
-05'00'

LUCAS ANDREW TURNER
LICENSE
No 58201
STATE OF FLORIDA
PROFESSIONAL ENGINEER

ZZ

10/1/2020
Lucas A. Turner, FLPE #58201
Turner Eng. & Cons., Inc.
FBPE COA #29779
2428 Old Natchez Trc. Trl.
Camden, TN 38320
Ph. 941-380-1574

LAWSON INDUSTRIES, INC.
8501 N. W. 90th Street
Medley, FL 33166

TITLE: GENERAL NOTES & FLANGE ELEVATIONS		
SERIES: PW-300	DRAWN BY: JML	DATE: 06/18/2019
MODEL:	SCALE: N.T.S.	DWG. NO. L-300-1901
	REV. LETTER:	SHEET SHT 1 of 12

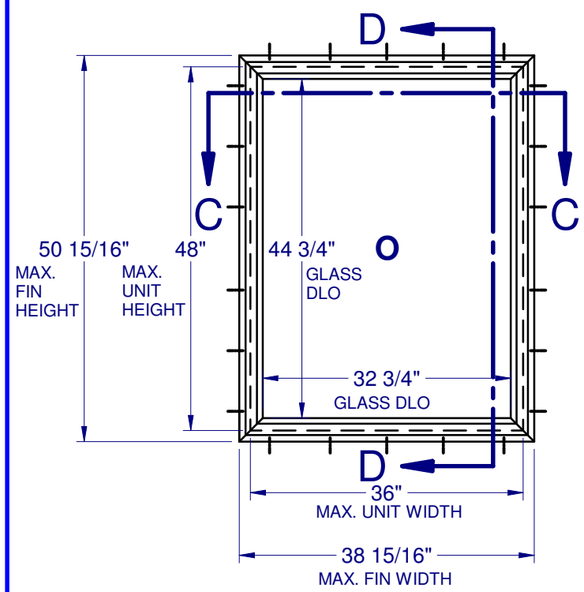

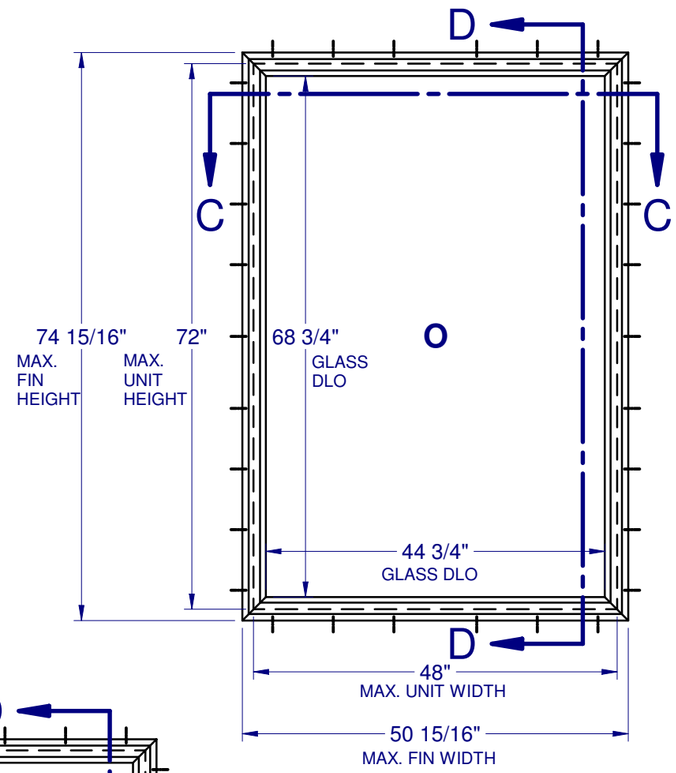

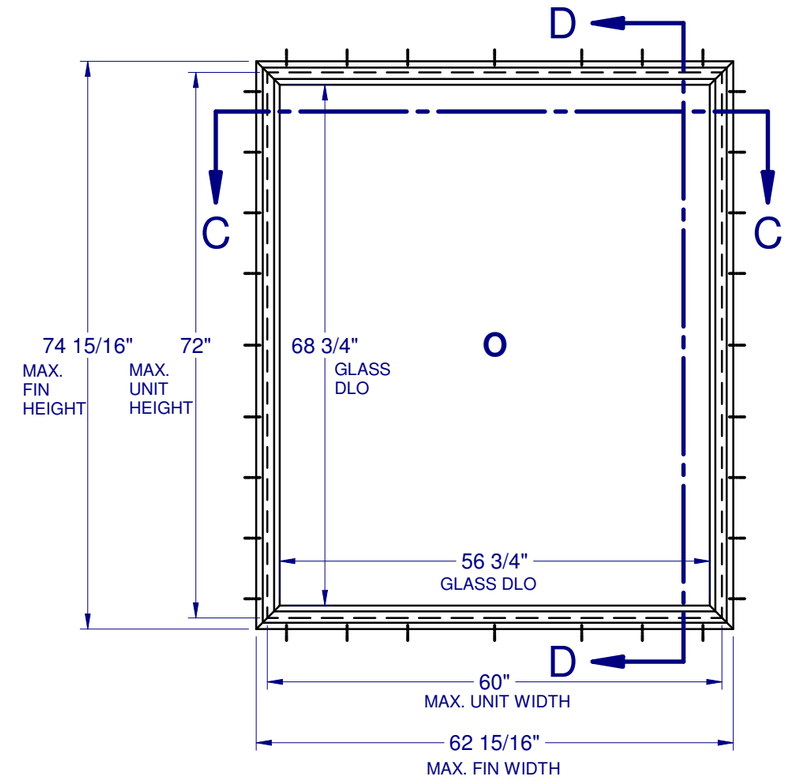

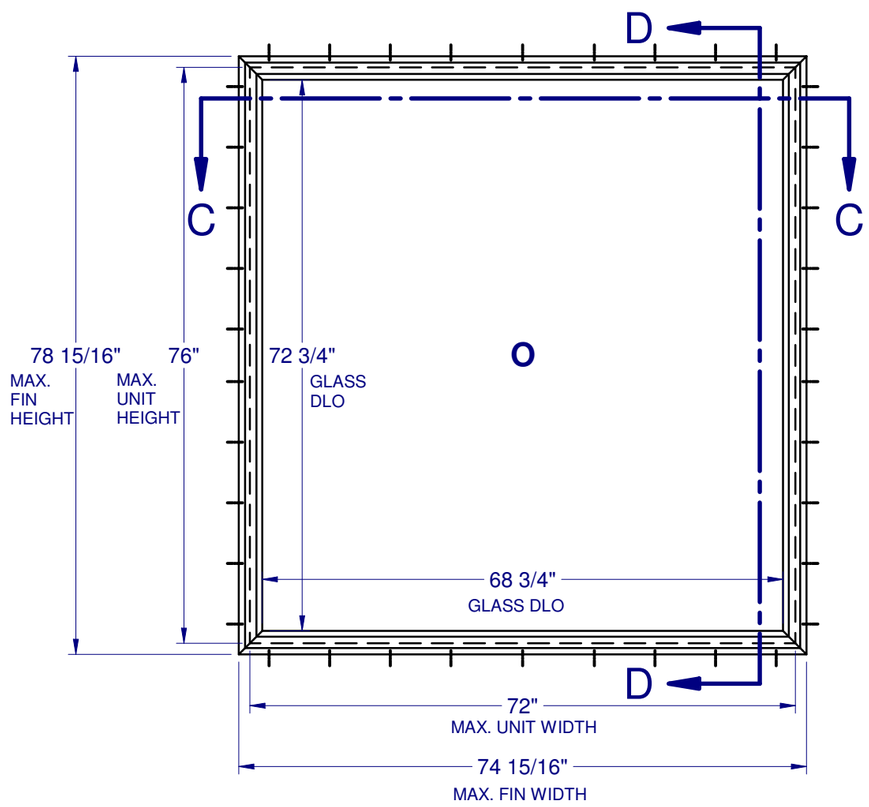

MAX. UNIT FIN WINDOW SIZE	DESIGN PRESSURE RATING	IMPACT RATING
36" x 48"	+55.0 / -55.0 PSF	NONE
48" x 72"	+55.0 / -55.0 PSF	NONE
60" x 72"	+45.0 / -45.0 PSF	NONE
72" x 76"	+40.0 / -40.0 PSF	NONE

LUCAS A. TURNER, FL. P.E. 58201

LUCAS ANDREW TURNER
LICENSE
No 58201
STATE OF
FLORIDA
PROFESSIONAL ENGINEER

LZ

10/1/2020
Lucas A. Turner, FLPE #58201
Turner Eng. & Cons., Inc.
FBPE COA #29779
2428 Old Natchez Trc. Trl.
Camden, TN 38320
Ph. 941-380-1574

LAWSON INDUSTRIES, INC.
8501 N. W. 90th Street
Medley, FL 33166

TITLE: NAILING FIN ELEVATIONS		
SERIES: PW-300	DRAWN BY: JML	DATE: 06/18/2019
MODEL:	SCALE: N.T.S.	DWG. NO. L-300-1901
	REV. LETTER:	SHEET SHT 2 of 12

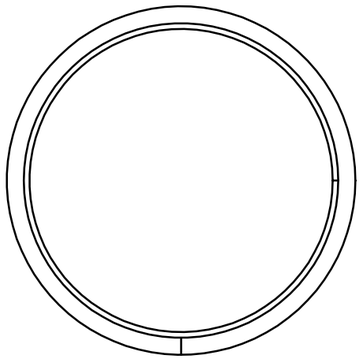

FULL CIRCLE

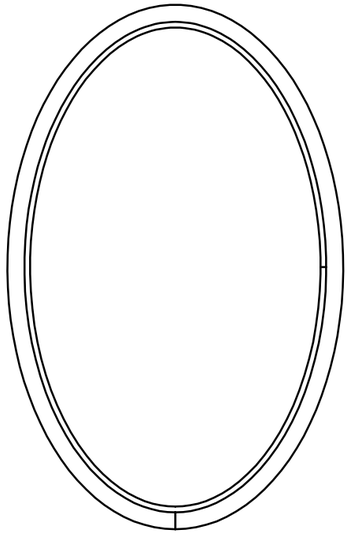

OVAL

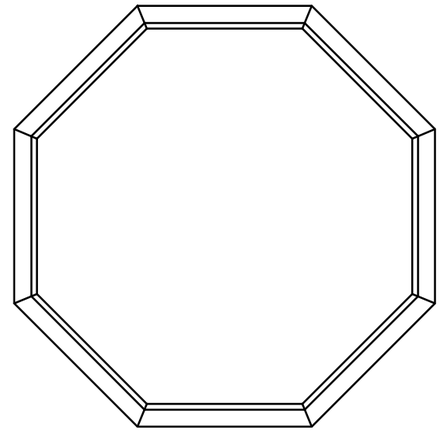

OCTAGON

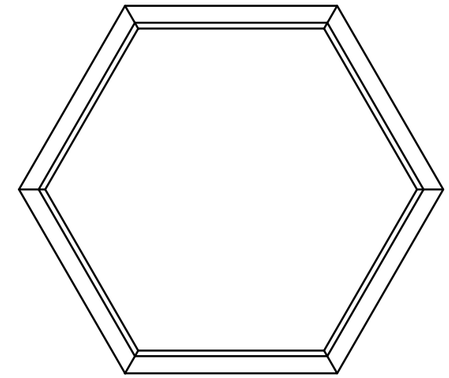

HEXAGON

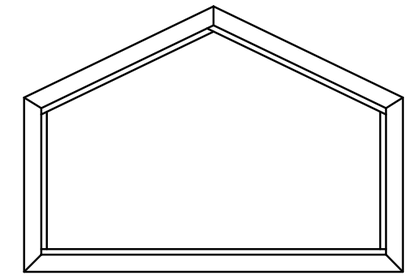

DOG HOUSE

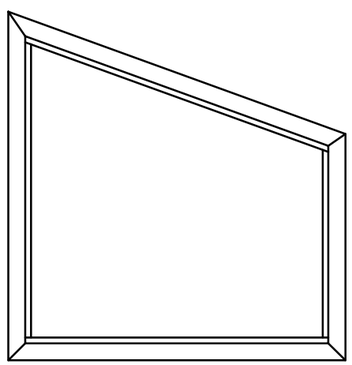

TRAPEZOID

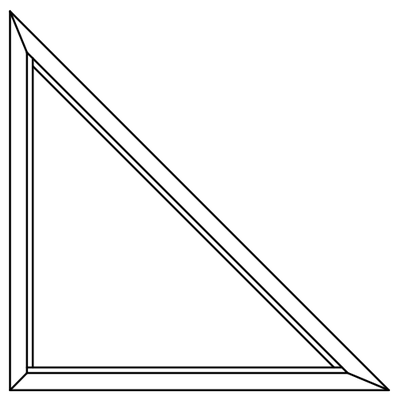

TRIANGLE

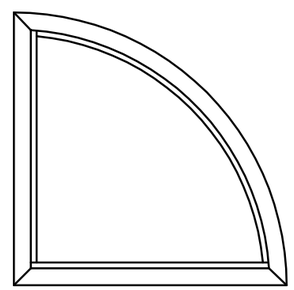

QUARTER CIRCLE

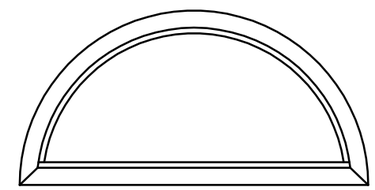

HALF CIRCLE

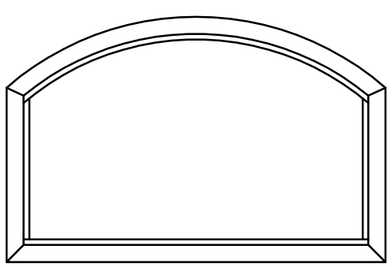

EYEBROW

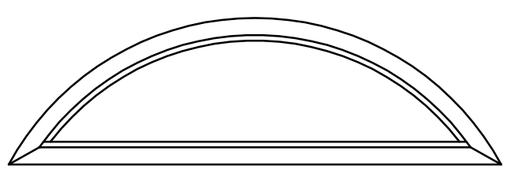

FAN

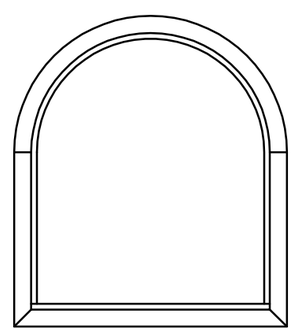

ARCH

NOTES:

1.) SEE SHEET 7 & 8 FOR DETAILED ANCHOR INSTALLATION REQUIREMENTS.

2.) THRU FRAME - MASONRY, WOOD OR METAL OPENING.
THRU FIN - WOOD OPENING

3.) OVERALL SIZE MUST NOT EXCEED THE MAX. WIDTH AND HEIGHT OF RECTANGULAR WINDOWS ON SHEETS 1 & 2.

4.) ANCHOR SPACING FOR ARCHITECTURAL FLANGE AND FIN WINDOWS MUST FOLLOW THE LAYOUT SHOWN ON SHEETS 7 & 8, WITH ANCHOR SPACING MEASURED ALONG THE LENGTH OF THE PRODUCT.

LUCAS ANDREW TURNER
LICENSE
No 58201
STATE OF
FLORIDA
PROFESSIONAL ENGINEER

LUCAS A. TURNER, FL. P.E. 58201

22

10/1/2020
Lucas A. Turner, FLPE #58201
Turner Eng. & Cons., Inc.
FBPE COA #29779
2428 Old Natchez Trc. Trl.
Camden, TN 38320
Ph. 941-380-1574

LAWSON INDUSTRIES, INC.
8501 N. W. 90th Street
Medley, FL 33166

TITLE: ARCHITECTURAL SHAPES		
SERIES: PW-300	DRAWN BY: JML	DATE: 06/18/2019
MODEL:	SCALE: N.T.S.	DWG. NO. L-300-1901
	REV. LETTER:	SHEET SHT 3 of 12

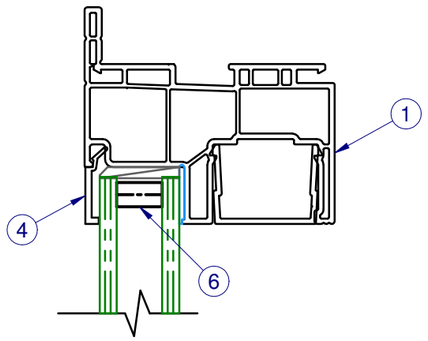

EXTERIOR INTERIOR

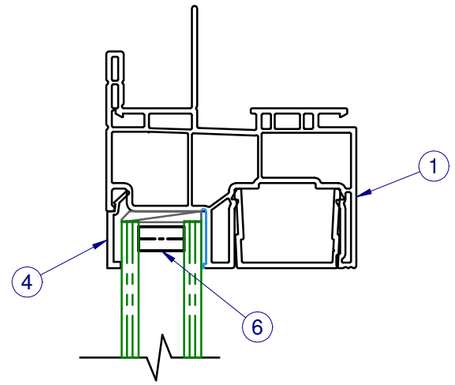

EXTERIOR INTERIOR

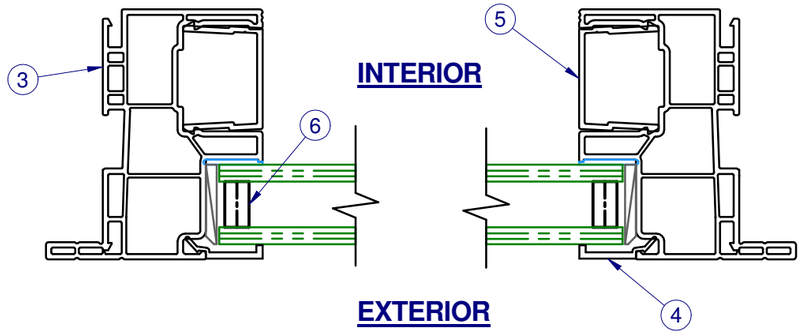

INTERIOR

EXTERIOR

SECTION B- B
FLANGE FRAME

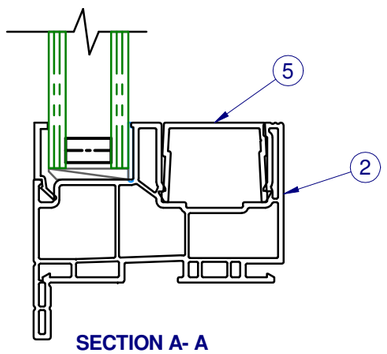

SECTION A- A
FLANGE FRAME

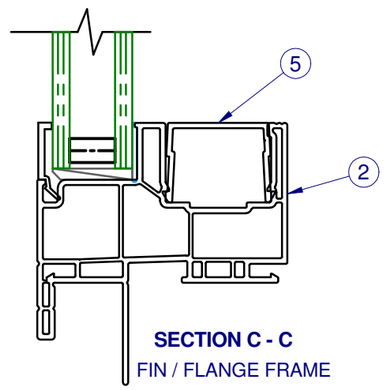

SECTION C - C
FIN / FLANGE FRAME

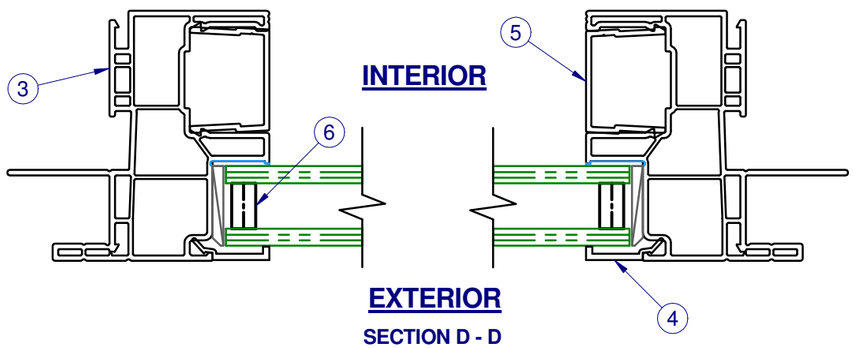

INTERIOR

EXTERIOR

SECTION D - D
FIN / FLANGE FRAME

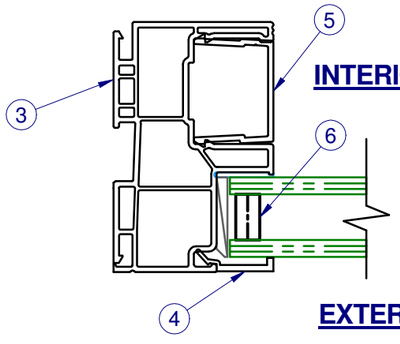

INTERIOR

EXTERIOR

SECTION B - B
ALT. BOX FRAME

LUCAS A. TURNER, FL. P.E. 58201

LUCAS ANDREW TURNER
LICENSE
No 58201
STATE OF FLORIDA
PROFESSIONAL ENGINEER

ZZ

10/1/2020
Lucas A. Turner, FLPE #58201
Turner Eng. & Cons., Inc.
FBPE COA #29779
2428 Old Natchez Trc. Trl.
Camden, TN 38320
Ph. 941-380-1574

LAWSON INDUSTRIES, INC.
8501 N. W. 90th Street
Medley, FL 33166

TITLE: SECTION VIEWS		
SERIES: PW-300	DRAWN BY: JML	DATE: 06/18/2019
MODEL:	SCALE: N.T.S.	DWG. NO. L-300-1901
	REV. LETTER:	SHEET SHT 4 of 12

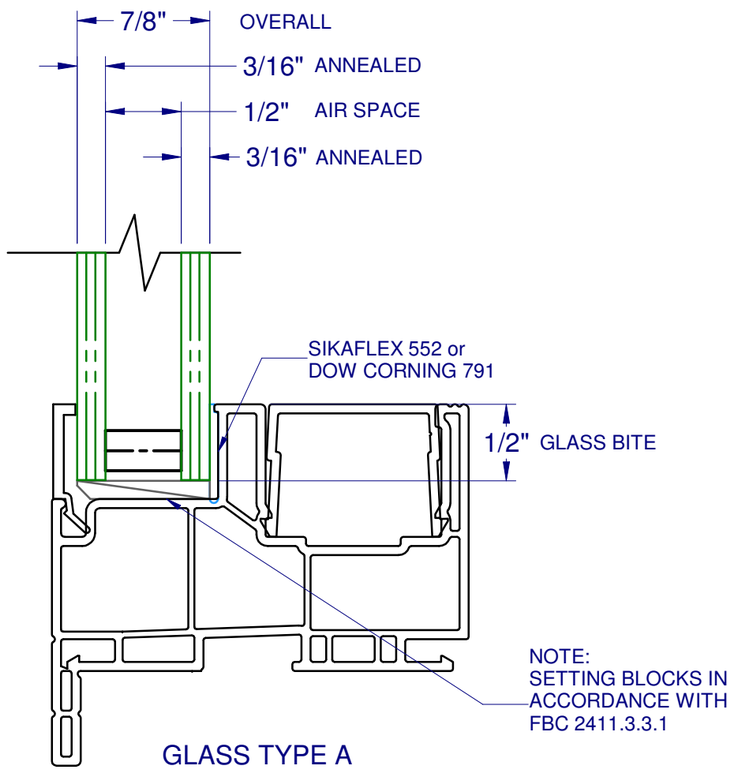

GLASS TYPE A
FIXED LITE

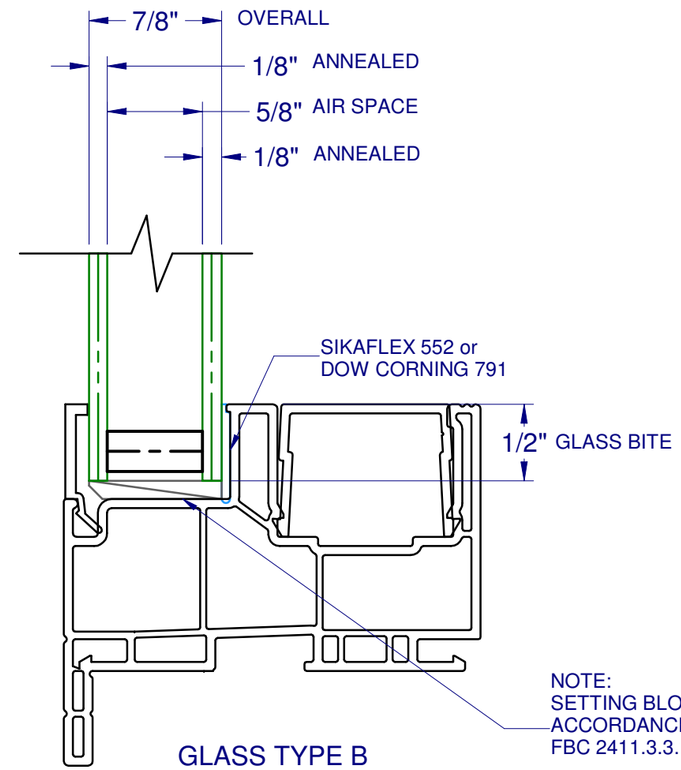

GLASS TYPE B
FIXED LITE

MAX. UNIT SIZE	DESIGN PRESSURE RATING	FIXED GLASS TYPE
36" x 48"	+55.0 / -55.0 PSF	B
48" x 72"	+55.0 / -55.0 PSF	A
60" x 72" (FLG.)	+50.0 / -50.0 PSF	A
60" x 72" (FIN)	+45.0 / -45.0 PSF	A
72" x 76"	+40.0 / -40.0 PSF	A

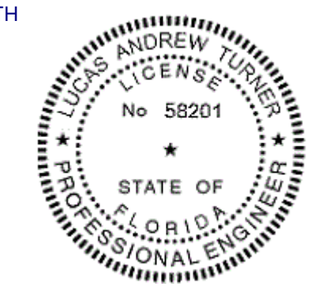

LUCAS A. TURNER, FL. P.E. 58201

10/1/2020
Lucas A. Turner, FLPE #58201
Turner Eng. & Cons., Inc.
FBPE COA #29779
2428 Old Natchez Trc. Trl.
Camden, TN 38320
Ph. 941-380-1574

LAWSON INDUSTRIES, INC.
8501 N. W. 90th Street
Medley, FL 33166

TITLE: GLAZING DETAILS		
SERIES: PW-300	DRAWN BY: JML	DATE: 06/18/2019
MODEL:	SCALE: N.T.S.	DWG. NO. L-300-1901
	REV. LETTER:	SHEET SHT 5 of 12

DESIGN PRESSURES FOR PICTURE WINDOW, CONFIGURATION O WITH GLASS TYPE A (EXCLUDES 60" x 72" FIN)												
BUCK	BUCK WIDTH											
HEIGHT	24.000	30.000	36.000	42.000	48.000	53.000	58.000	60.000	63.000	68.000	72.000	76.000
24.000	+110.0/-110.0	+110.0/-110.0	+110.0/-110.0	+110.0/-110.0	+110.0/-110.0	+110.0/-110.0	+110.0/-110.0	+110.0/-110.0	+103.5/-103.5	+94.3/-94.3	+88.0/-88.0	+75.0/-75.0
30.000	+110.0/-110.0	+110.0/-110.0	+110.0/-110.0	+110.0/-110.0	+110.0/-110.0	+109.1/-109.1	+98.2/-98.2	+93.9/-93.9	+88.0/-88.0	+79.7/-79.7	+74.1/-74.1	+63.0/-63.0
36.000	+110.0/-110.0	+110.0/-110.0	+100.0/-100.0	+100.0/-100.0	+100.0/-100.0	+100.0/-100.0	+88.0/-88.0	+83.8/-83.8	+78.2/-78.2	+70.4/-70.4	+65.2/-65.2	+55.2/-55.2
42.000	+110.0/-110.0	+110.0/-110.0	+100.0/-100.0	+92.5/-92.5	+92.5/-92.5	+92.5/-92.5	+81.1/-81.1	+76.9/-76.9	+71.8/-71.8	+64.2/-64.2	+59.2/-59.2	+49.9/-49.9
48.000	+110.0/-110.0	+110.0/-110.0	+100.0/-100.0	+92.5/-92.5	+80.0/-80.0	+80.0/-80.0	+77.2/-77.2	+72.9/-72.9	+67.3/-67.3	+59.7/-59.7	+55.0/-55.0	+46.2/-46.2
53.000	+110.0/-110.0	+109.1/-109.1	+100.0/-100.0	+92.5/-92.5	+80.0/-80.0	+73.3/-73.3	+69.0/-69.0	+64.9/-64.9	+64.1/-64.1	+57.3/-57.3	+52.2/-52.2	+43.9/-43.9
58.000	+110.0/-110.0	+98.2/-98.2	+88.0/-88.0	+81.1/-81.1	+77.2/-77.2	+69.0/-69.0	+61.6/-61.6	+61.6/-61.6	+58.4/-58.4	+53.5/-53.5	+50.5/-50.5	+42.3/-42.3
60.000	+110.0/-110.0	+93.9/-93.9	+83.8/-83.8	+76.9/-76.9	+72.9/-72.9	+64.9/-64.9	+61.6/-61.6	+57.6/-57.6	+57.6/-57.6	+50.5/-50.5	+50.0/-50.0	+41.7/-41.7
63.000	+103.5/-103.5	+88.0/-88.0	+78.2/-78.2	+71.8/-71.8	+67.3/-67.3	+64.1/-64.1	+58.4/-58.4	+57.6/-57.6	+52.2/-52.2	+50.1/-50.1	+45.1/-45.1	+41.1/-41.1
68.000	+94.3/-94.3	+79.7/-79.7	+70.4/-70.4	+64.2/-64.2	+59.7/-59.7	+57.3/-57.3	+53.5/-53.5	+50.5/-50.5	+50.1/-50.1	+44.8/-44.8	+44.6/-44.6	+40.3/-40.3
72.000	+88.0/-88.0	+74.1/-74.1	+65.2/-65.2	+59.2/-59.2	+55.0/-55.0	+52.2/-52.2	+50.5/-50.5	+50.0/-50.0	+45.1/-45.1	+44.6/-44.6	+40.0/-40.0	+40.0/-40.0
76.000	+75.0/-75.0	+63.0/-63.0	+55.2/-55.2	+49.9/-49.9	+46.2/-46.2	+43.9/-43.9	+42.3/-42.3	+41.7/-41.7	+41.1/-41.1	+40.3/-40.3	+40.0/-40.0	

DESIGN PRESSURES FOR PICTURE WINDOW, CONFIGURATION O WITH GLASS TYPE A, 60" x 72" FIN											
BUCK	BUCK WIDTH										
HEIGHT	24.000	30.000	36.000	42.000	48.000	53.000	58.000	60.000	63.000	68.000	72.000
24.000	+90.0/-90.0	+90.0/-90.0	+90.0/-90.0	+90.0/-90.0	+90.0/-90.0	+90.0/-90.0	+90.0/-90.0	+90.0/-90.0	+90.0/-90.0	+84.4/-84.4	+78.8/-78.8
30.000	+90.0/-90.0	+90.0/-90.0	+90.0/-90.0	+90.0/-90.0	+90.0/-90.0	+90.0/-90.0	+87.9/-87.9	+84.0/-84.0	+78.8/-78.8	+71.3/-71.3	+66.3/-66.3
36.000	+90.0/-90.0	+90.0/-90.0	+90.0/-90.0	+90.0/-90.0	+90.0/-90.0	+90.0/-90.0	+78.8/-78.8	+75.0/-75.0	+70.0/-70.0	+63.0/-63.0	+58.3/-58.3
42.000	+90.0/-90.0	+90.0/-90.0	+90.0/-90.0	+90.0/-90.0	+90.0/-90.0	+84.4/-84.4	+73.0/-73.0	+69.2/-69.2	+64.3/-64.3	+57.4/-57.4	+52.9/-52.9
48.000	+90.0/-90.0	+90.0/-90.0	+90.0/-90.0	+90.0/-90.0	+70.3/-70.3	+70.3/-70.3	+69.5/-69.5	+65.6/-65.6	+60.6/-60.6	+53.7/-53.7	+49.2/-49.2
53.000	+90.0/-90.0	+90.0/-90.0	+90.0/-90.0	+84.4/-84.4	+70.3/-70.3	+57.7/-57.7	+57.7/-57.7	+57.7/-57.7	+57.7/-57.7	+51.6/-51.6	+47.0/-47.0
58.000	+90.0/-90.0	+87.9/-87.9	+78.8/-78.8	+73.0/-73.0	+69.5/-69.5	+57.7/-57.7	+48.2/-48.2	+48.2/-48.2	+48.2/-48.2	+48.2/-48.2	+45.5/-45.5
60.000	+90.0/-90.0	+84.0/-84.0	+75.0/-75.0	+69.2/-69.2	+65.6/-65.6	+57.7/-57.7	+48.2/-48.2	+45.0/-45.0	+45.0/-45.0	+45.0/-45.0	+45.0/-45.0
63.000	+90.0/-90.0	+78.8/-78.8	+70.0/-70.0	+64.3/-64.3	+60.6/-60.6	+57.7/-57.7	+48.2/-48.2	+45.0/-45.0			
68.000	+84.4/-84.4	+71.3/-71.3	+63.0/-63.0	+57.4/-57.4	+53.7/-53.7	+51.6/-51.6	+48.2/-48.2	+45.0/-45.0			
72.000	+78.8/-78.8	+66.3/-66.3	+58.3/-58.3	+52.9/-52.9	+49.2/-49.2	+47.0/-47.0	+45.5/-45.5	+45.0/-45.0			

D.P. FOR PICTURE WINDOW, CONFIG. O, GLASS TYPE B					
BUCK	BUCK WIDTH				
HEIGHT	24.000	30.000	36.000	42.000	48.000
24.000	+110.0/-110.0	+110.0/-110.0	+103.1/-103.1	+82.5/-82.5	+68.8/-68.8
30.000	+110.0/-110.0	+79.2/-79.2	+79.2/-79.2	+73.3/-73.3	+60.0/-60.0
36.000	+103.1/-103.1	+79.2/-79.2	+55.0/-55.0	+55.0/-55.0	+55.0/-55.0
42.000	+82.5/-82.5	+73.3/-73.3	+55.0/-55.0		
48.000	+68.8/-68.8	+60.0/-60.0	+55.0/-55.0		

LUCAS ANDREW TURNER
LICENSE
No 58201
STATE OF FLORIDA
PROFESSIONAL ENGINEER

LUCAS A. TURNER, FL. P.E. 58201

22

10/1/2020
Lucas A. Turner, FLPE #58201
Turner Eng. & Cons., Inc.
FBPE COA #29779
2428 Old Natchez Trc. Trl.
Camden, TN 38320
Ph. 941-380-1574

LAWSON INDUSTRIES, INC.
8501 N. W. 90th Street
Medley, FL 33166

TITLE: COMPARATIVE ANALYSIS CHART

SERIES: PW-300	DRAWN BY: JML	DATE: 06/18/2019
MODEL:	SCALE: N.T.S.	DWG. NO. L-300-1901
	REV. LETTER:	SHEET SHT 6 of 12

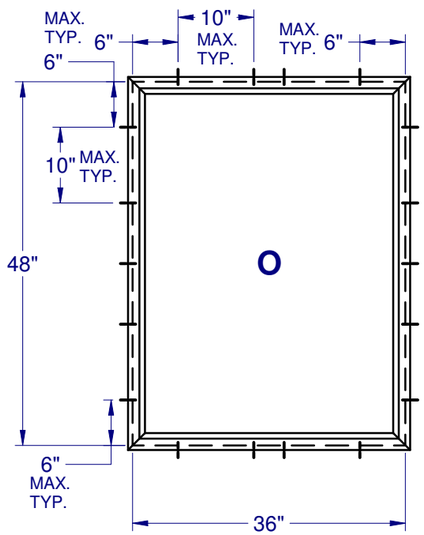

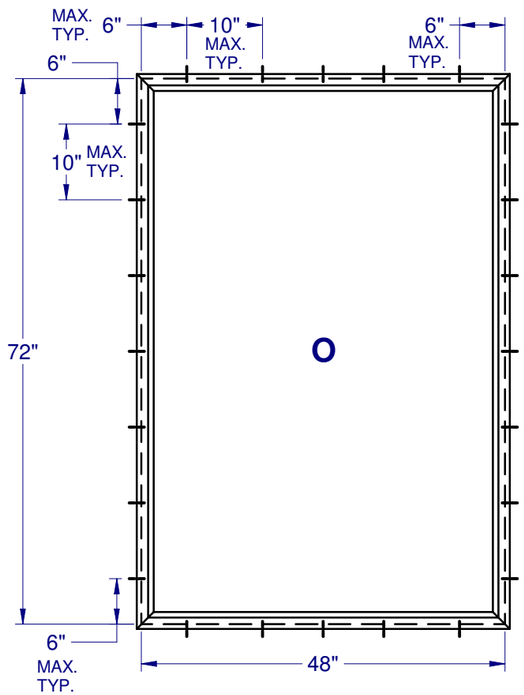

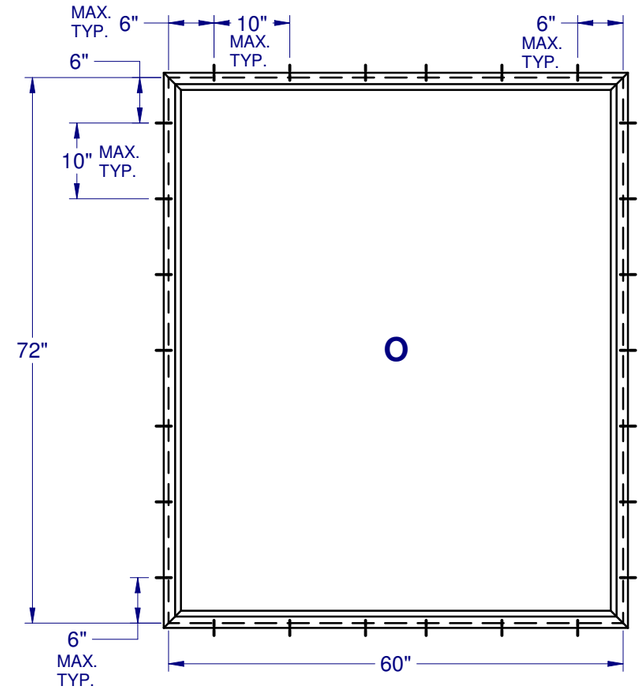

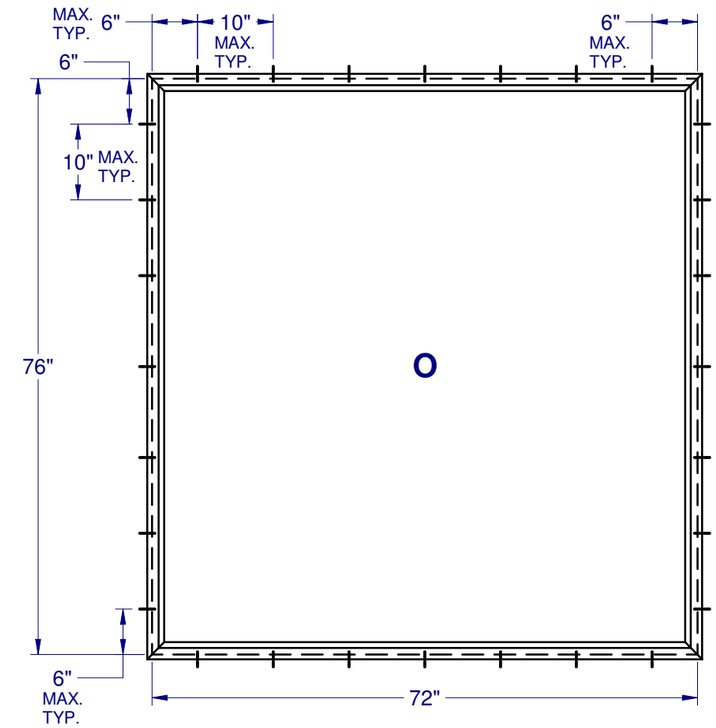

NOTES:

1.) INSTALL ONE ANCHOR AT EACH INSTALLATION LOCATION.

2.) SHIM AS REQUIRED AT EACH INSTALLATION ANCHOR USING LOAD BEARING SHIMS. MAX. ALLOWABLE SHIM STACK TO BE $\frac{1}{4}$".

USE SHIMS WHERE SPACE GREATER THAT $\frac{1}{16}$" IS PRESENT. LOAD BEARING SHIMS SHALL BE CONSTRUCTED OF HIGH DENSITY PLASTIC OR BETTER. WOOD SHIMS ARE NOT ALLOWED.

3.) ANCHOR TYPE, SIZE, SPACING AND EMBEDMENT SHALL BE AS SPECIFIED IN THESE DRAWINGS, SEE TABLE 1, SHEET 12

4.) ALL INSTALLATIN ANCHORS MUST BE MADE OF OR PROTECTED WITH A CORROSION RESISTANT MATERIAL OR COATING. DISSIMILAR METALS OR MATERIALS IN CONTACT WITH PRESSURE TREATED WOOD MUST BE PROTECTED TO PREVENT REACTION.

5.) INSTALLATION ANCHORS SHALL BE IN ACCORDANCE WITH ANCHOR MANUFACTURER'S INSTALLATION INSTRUCTIONS, AND ACNHORS SHALL NOT BE USED IN SUBSTRATES WITH STRENGTHS LESS THAN THE MINIMUM SPECIFIED IN TABLE 1, SHEET 12.

6.) ANCHOR EMBEDMENT TO SUBSTRATE SHALL BE BEYOND WALL DRESSING OR STUCCO. FOR CONCRETE / CMU OPENINGS, EMBEDMENT SHALL BE BEYOND WOOD BUCKS, IF USED, INTO SUBSTRATE. INSTALLATIONS INTO SOLID CONCRETE OR GROUT-FILLED CMU MAY INCLUDE, BUT DO NOT REQUIRE 1X WOOD BUCKS BETWEEN THE PRODUCT AND THE SUBSTRATE. INSTALLATIONS INTO HOLLOW CMU REQUIRE THE USE OF 1X BUCKS BETWEEN THE PRODUCT AND SUBSTRATE.

7.) A MINIMUM CENTER-TO-CENTER SPACING SHALL BE MAINTAINED BETWEEN ALL FASTENERS: 3" FOR MASONRY, 1" FOR WOOD AND METAL.

8.) WOOD OR MASONRY OPENINGS, BUCKS AND BUCK FASTENERS SHALL BE PROPERLY DESIGNED BY THE ARCHITECT OR ENGINEER OF RECORD AND INSTALLED TO TRASFER WIND LOADS TO THE STRUCTURE. SUBSTRATES SHALL MEET THE MINIMUM STRENGTH REQUIREMENTS AS SHOWN IN TABLE 1, SHEET 12. CONCRETE AND MASONRY SUBSTRATES MAY NOT BE CRACKED.

9.) SEALING AND FLASHING STRATEGIES FOR OVERALL WATER RESISTANCE OF INSTALLATION SHALL BE DONE BY OTHER FOLLOWING THE CURRENT VERSION OF THE REFERENCED DOCUMENTS: FMA/AAMA 100 (FIN WINDOWS), FMA/AAMA 200 (FLANGE WINDOWS), FMA/WDMA 250 (BOX WINDOWS), FMA/AAMA/WDMA 300 (EXTERIOR DOORS).

LUCAS A. TURNER, FL. P.E. 58201

LZ

10/1/2020
Lucas A. Turner, FLPE #58201
Turner Eng. & Cons., Inc.
FBPE COA #29779
2428 Old Natchez Trc. Trl.
Camden, TN 38320
Ph. 941-380-1574

LAWSON INDUSTRIES, INC.
8501 N. W. 90th Street
Medley, FL 33166

TITLE: ANCHOR SCHEDULE & NOTES, FLANGE & BOX		
SERIES: PW-300	DRAWN BY: JML	DATE: 06/18/2019
MODEL:	SCALE: N.T.S.	DWG. NO. L-300-1901
	REV. LETTER:	SHEET SHT 7 of 12

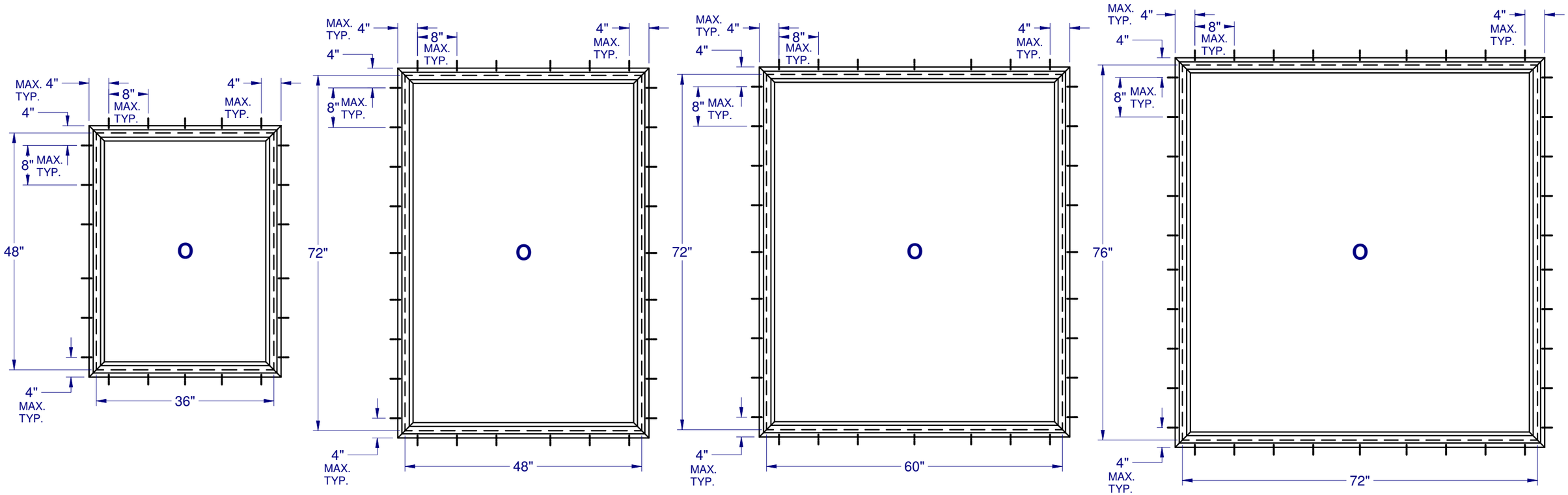

NOTES:

1.) INSTALL ONE ANCHOR AT EACH INSTALLATION LOCATION.

2.) SHIM AS REQUIRED AT EACH INSTALLATION ANCHOR USING LOAD BEARING SHIMS. MAX. ALLOWABLE SHIM STACK TO BE $\frac{1}{4}$".

USE SHIMS WHERE SPACE GREATER THAT $\frac{1}{16}$" IS PRESENT. LOAD BEARING SHIMS SHALL BE CONSTRUCTED OF HIGH DENSITY PLASTIC OR BETTER. WOOD SHIMS ARE NOT ALLOWED.

3.) ANCHOR TYPE, SIZE, SPACING AND EMBEDMENT SHALL BE AS SPECIFIED IN THESE DRAWINGS, SEE TABLE 1, SHEET 12.

4.) ALL INSTALLATIN ANCHORS MUST BE MADE OF OR PROTECTED WITH A CORROSION RESISTANT MATERIAL OR COATING. DISSIMILAR METALS OR MATERIALS IN CONTACT WITH PRESSURE TREATED WOOD MUST BE PROTECTED TO PREVENT REACTION.

5.) INSTALLATION ANCHORS SHALL BE IN ACCORDANCE WITH ANCHOR MANUFACTURER'S INSTALLATION INSTRUCTIONS, AND ACNHORS SHALL NOT BE USED IN SUBSTRATES WITH STRENGTHS LESS THAN THE MINIMUM SPECIFIED IN TABLE 1, SHEET 12.

6.) ANCHOR EMBEDMENT TO SUBSTRATE SHALL BE BEYOND WALL DRESSING OR STUCCO. FOR CONCRETE / CMU OPENINGS, EMBEDMENT SHALL BE BEYOND WOOD BUCKS, IF USED, INTO SUBSTRATE. INSTALLATIONS INTO SOLID CONCRETE OR GROUT-FILLED CMU MAY INCLUDE, BUT DO NOT REQUIRE 1X WOOD BUCKS BETWEEN THE PRODUCT AND THE SUBSTRATE. INSTALLATIONS INTO HOLLOW CMU REQUIRE THE USE OF 1X BUCKS BETWEEN THE PRODUCT AND SUBSTRATE.

7.) A MINIMUM CENTER-TO-CENTER SPACING SHALL BE MAINTAINED BETWEEN ALL FASTENERS: 3" FOR MASONRY, 1" FOR WOOD AND METAL.

8.) WOOD OR MASONRY OPENINGS, BUCKS AND BUCK FASTENERS SHALL BE PROPERLY DESIGNED BY THE ARCHITECT OR ENGINEER OF RECORD AND INSTALLED TO TRASFER WIND LOADS TO THE STRUCTURE. SUBSTRATES SHALL MEET THE MINIMUM STRENGTH REQUIREMENTS AS SHOWN IN TABLE 1, SHEET 12. CONCRETE AND MASONRY SUBSTRATES MAY NOT BE CRACKED.

9.) SEALING AND FLASHING STRATEGIES FOR OVERALL WATER RESISTANCE OF INSTALLATION SHALL BE DONE BY OTHER FOLLOWING THE CURRENT VERSION OF THE REFERENCED DOCUMENTS: FMA/AAMA 100 (FIN WINDOWS), FMA/AAMA 200 (FLANGE WINDOWS), FMA/WDMA 250 (BOX WINDOWS), FMA/AAMA/WDMA 300 (EXTERIOR DOORS).

LUCAS A. TURNER, FL. P.E. 58201

10/1/2020
Lucas A. Turner, FLPE #58201
Turner Eng. & Cons., Inc.
FBPE COA #29779
2428 Old Natchez Trc. Trl.
Camden, TN 38320
Ph. 941-380-1574

LAWSON INDUSTRIES, INC.
8501 N. W. 90th Street
Medley, FL 33166

TITLE: ANCHOR SCHEDULE & NOTES, NAILING FIN		
SERIES: PW-300	DRAWN BY: JML	DATE: 06/18/2019
MODEL:	SCALE: N.T.S.	DWG. NO. L-300-1901
	REV. LETTER:	SHEET SHT 8 of 12

BILL OF MATERIALS

Item	Description	Material	Vendor	Vendor #
1	Frame, Head	Rigid PVC	MIKRON	10863
2	Frame, Sill	Rigid PVC	MIKRON	10863
3	Frame, Jamb	Rigid PVC	MIKRON	10863
4	Glazing Bead, 7/8" (Fixed)	Rigid PVC	MIKRON	5927
5	Install Hole Cover	Rigid PVC	MIKRON	9612
6	Duraseal Spacer		QUANEX	

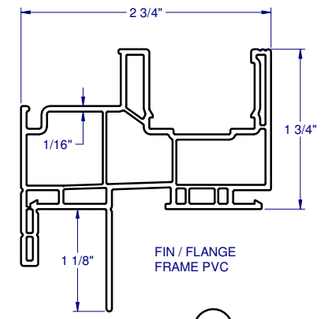

FIN / FLANGE
FRAME PVC

1

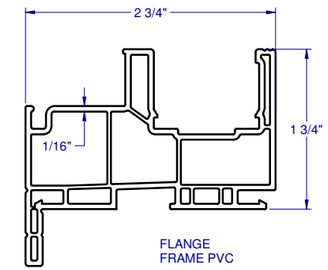

FLANGE
FRAME PVC

1

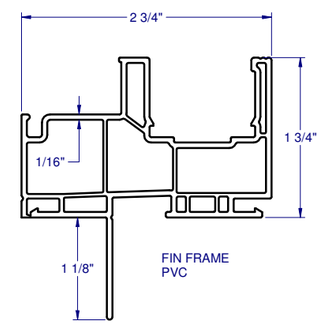

FIN FRAME
PVC

1

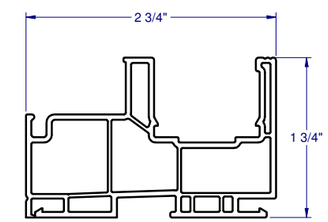

BOX
FRAME PVC

1

FRAME CORNER CONSTRUCTION

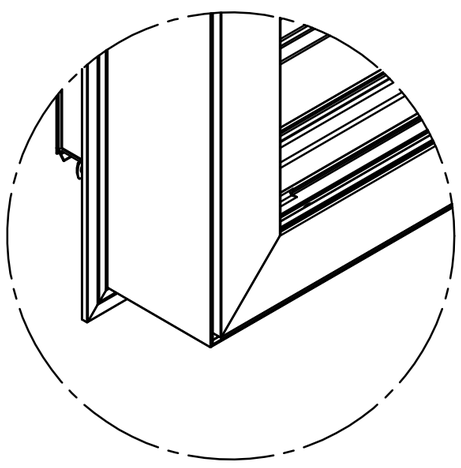

CORNER WELD
ALL FOUR SIDES

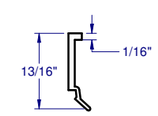

GLAZING
BEAD PVC

4

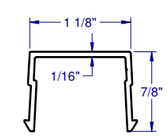

INSTALL HOLE
COVER PVC

5

LUCAS A. TURNER, FL. P.E. 58201

7Z

10/1/2020
Lucas A. Turner, FLPE #58201
Turner Eng. & Cons., Inc.
FBPE COA #29779
2428 Old Natchez Trc. Trl.
Camden, TN 38320
Ph. 941-380-1574

LAWSON INDUSTRIES, INC.
8501 N. W. 90th Street
Medley, FL 33166

TITLE: EXTRUSIONS & B.O.M.		
SERIES: PW-300	DRAWN BY: JML	DATE: 06/18/2019
MODEL:	SCALE: N.T.S.	DWG. NO. L-300-1901
	REV. LETTER:	SHEET SHT 9 of 12

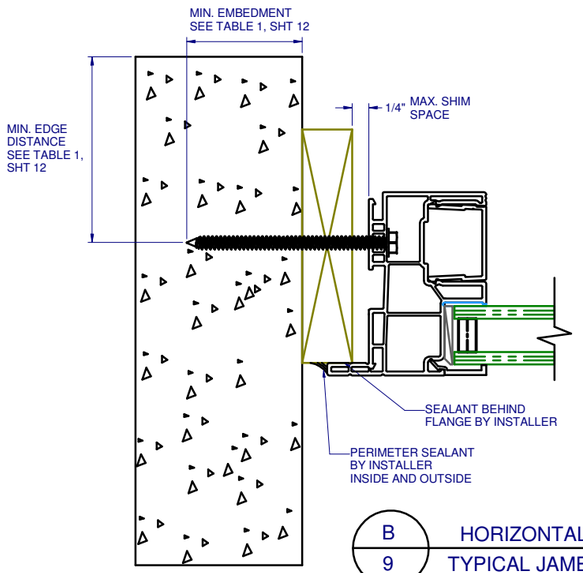

B / 9 HORIZONTAL SECTION
TYPICAL JAMB ANCHORAGE
THRU-FRAME
FLANGE CONCRETE / CMU

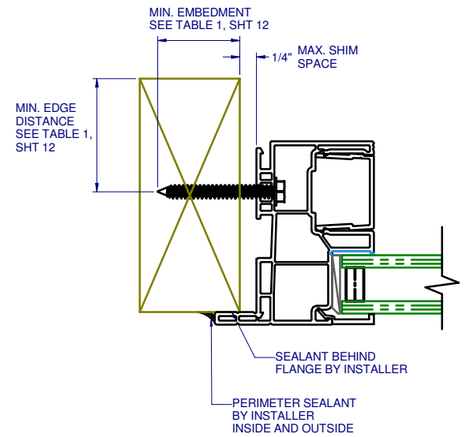

C / 9 HORIZONTAL SECTION
TYPICAL JAMB ANCHORAGE
THRU-FRAME
FLANGE WOOD FRAMING
HEAD & SILL DETAILS SIMILAR

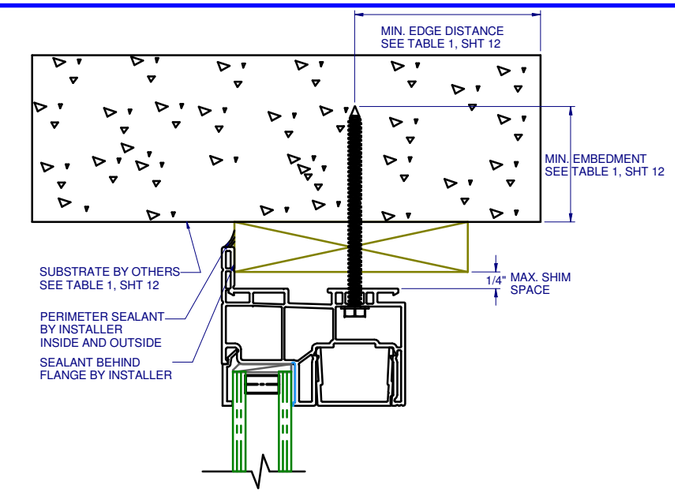

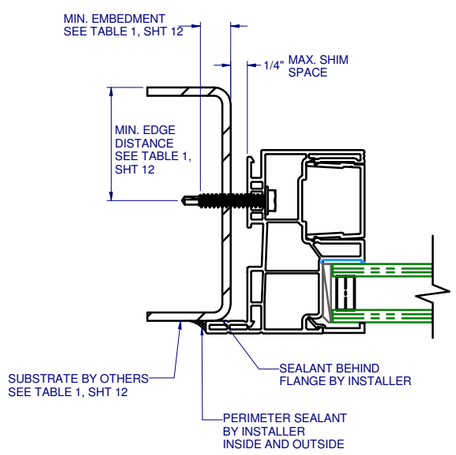

D / 9 HORIZONTAL SECTION
TYPICAL JAMB ANCHORAGE
THRU-FRAME
FLANGE METAL FRAMING
HEAD & SILL DETAILS SIMILAR

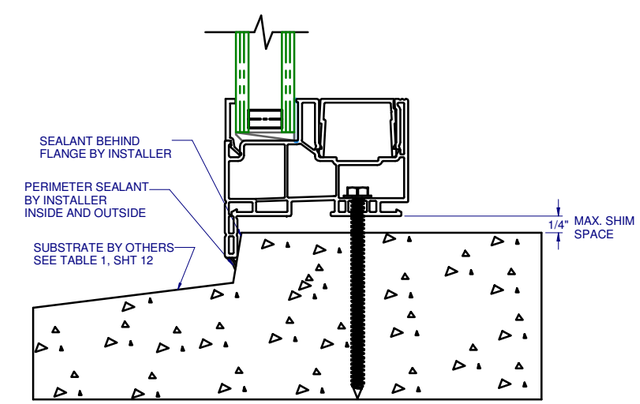

A / 9 VERTICAL SECTION
TYPICAL SILL & HEAD ANCHORAGE
THRU-FRAME
FLANGE CONCRETE / CMU

LUCAS A. TURNER, FL. P.E. 58201

LUCAS ANDREW TURNER
LICENSE
No 58201
STATE OF
FLORIDA
PROFESSIONAL ENGINEER

77

10/1/2020
Lucas A. Turner, FLPE #58201
Turner Eng. & Cons., Inc.
FBPE COA #29779
2428 Old Natchez Trc. Trl.
Camden, TN 38320
Ph. 941-380-1574

LAWSON INDUSTRIES, INC.
8501 N. W. 90th Street
Medley, FL 33166

TITLE: INSTALLATION DETAILS, FLANGE		
SERIES: PW-300	DRAWN BY: JML	DATE: 06/18/2019
MODEL:	SCALE: N.T.S.	DWG. NO. L-300-1901
	REV. LETTER:	SHEET SHT 10 of 12

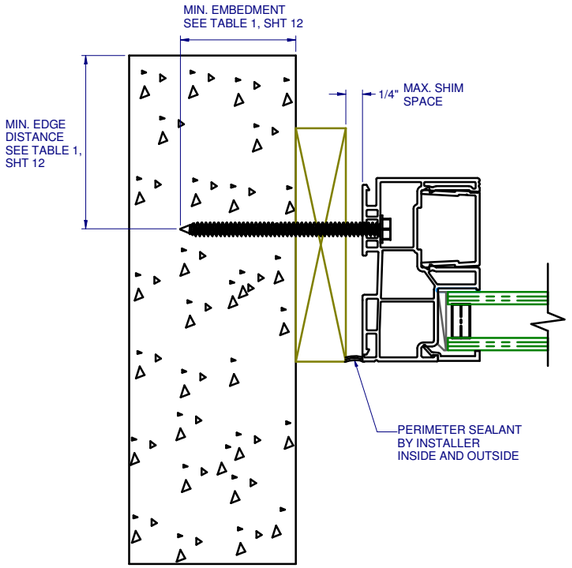

B / 10 HORIZONTAL SECTION
TYPICAL JAMB ANCHORAGE
THRU-FRAME
BOX FRAME CONCRETE / CMU

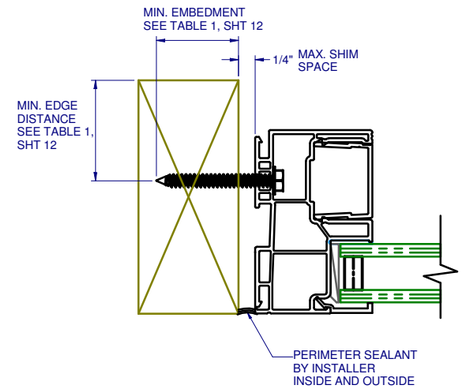

C / 10 HORIZONTAL SECTION
TYPICAL JAMB ANCHORAGE
THRU-FRAME
BOX WOOD FRAMING
HEAD & SILL DETAILS SIMILAR

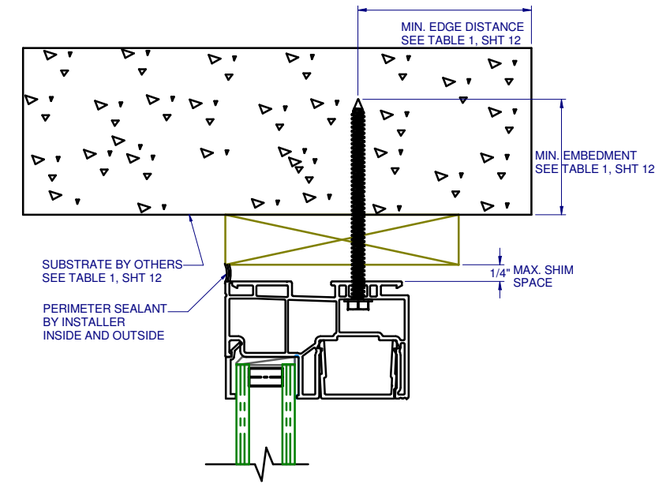

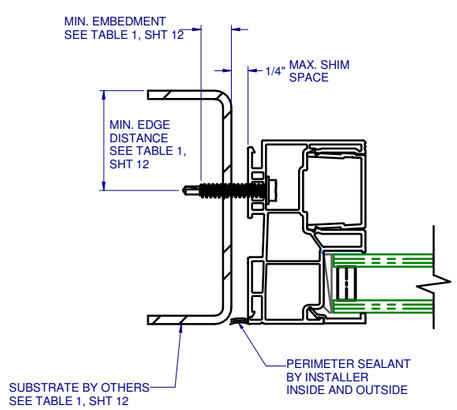

D / 10 HORIZONTAL SECTION
TYPICAL JAMB ANCHORAGE
THRU-FRAME
BOX FRAME METAL FRAMING
HEAD & SILL DETAILS SIMILAR

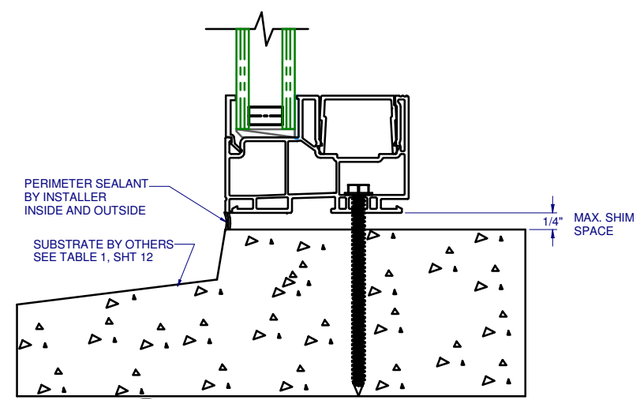

A / 10 VERTICAL SECTION
TYPICAL SILL & HEAD ANCHORAGE
THRU-FRAME
BOX CONCRETE / CMU

LUCAS A. TURNER, FL. P.E. 58201

LUCAS ANDREW TURNER
LICENSE
No 58201
STATE OF
FLORIDA
PROFESSIONAL ENGINEER

LZ

10/1/2020
Lucas A. Turner, FLPE #58201
Turner Eng. & Cons., Inc.
FBPE COA #29779
2428 Old Natchez Trc. Trl.
Camden, TN 38320
Ph. 941-380-1574

LAWSON INDUSTRIES, INC.
8501 N. W. 90th Street
Medley, FL 33166

TITLE: INSTALLATION DETAILS, BOX		
SERIES: PW-300	DRAWN BY: JML	DATE: 06/18/2019
MODEL:	SCALE: N.T.S.	DWG. NO. L-300-1901
	REV. LETTER:	SHEET SHT 11 of 12

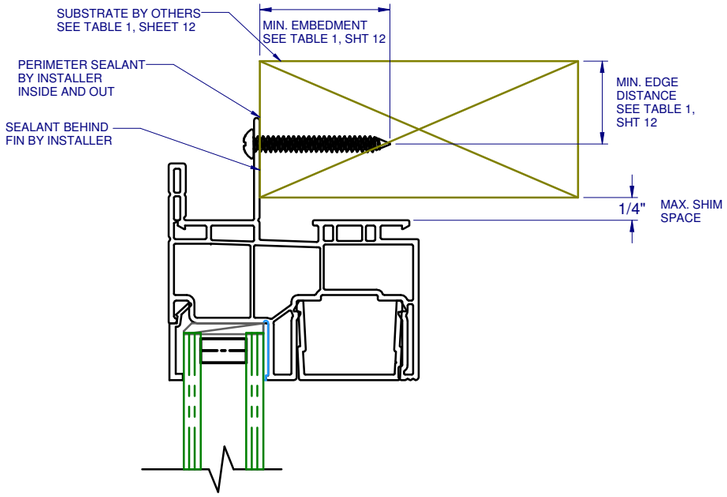

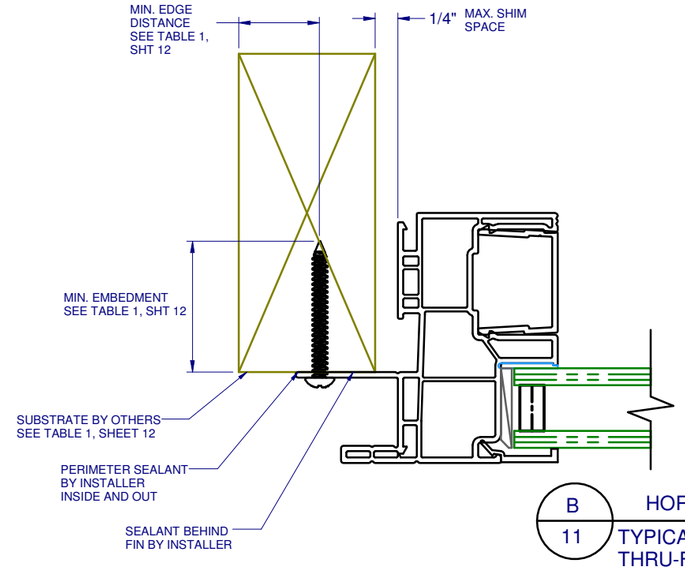

B / 11 HORIZONTAL SECTION
TYPICAL JAMB ANCHORAGE
THRU-FIN
FIN / FLANGE WOOD FRAMING

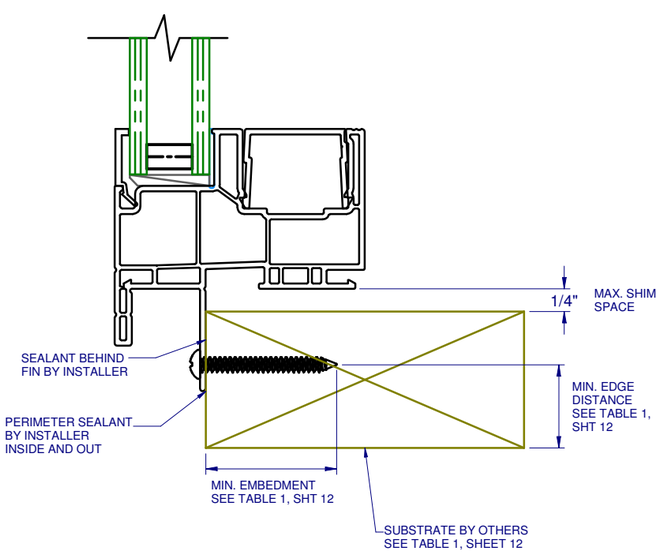

A / 11 VERTICAL SECTION
TYPICAL SILL & HEAD ANCHORAGE
THRU-FIN
FIN / FLANGE WOOD FRAMING

TABLE 1: APPROVED INSTALLATION FASTENERS

THRU	SUBSTRATE TYPE	ANCHOR TYPE	MIN. EMBEDMENT	MIN. EDGE DIST.
FRAME	CONCRETE (2.0 KSI MIN.)	3/16" ITW TAPCON	1 1/2"	1 1/8"
FRAME	HOLLOW OR GROUT-FILLED CMU (117 PCF MIN.)	3/16" ITW TAPCON	1 "	2 "
FRAME	CONCRETE (2.85 KSI MIN.)	3/16" ELCO ULTRACON	1 "	1 "
FRAME	GROUT-FILLED CMU (ASTM C-90)	3/16" ELCO ULTRACON	1 1/4"	2 1/2"
FRAME	2x MIN. SOUTHERN PINE (G-0.55)	3/16" ITW TAPCON OR ELCO ULTRACON	1 3/8"	7/8"
FRAME	2x MIN. SOUTHERN PINE (G-0.55)	#10 WOOD SCREW	1 3/8"	7/8"
FRAME	16 GAUGE (0.060) MIN. STEEL STUD (33 KSI YIELD MIN.)	#10-16 HILTI KWIK-FLEX OR ITW TEKS-SELF DRILLING SCREW	FULL THREAD THRU 0.060	1/2"
FRAME	1/8" ALUM. (6063-T5 MIN.) OR 1/8" STEEL (33 KSI MIN.)	#10 GRADE 5 SELF-TAPPING / DRILLING SCREW	FULL THREAD THRU 0.125	1/2"
FIN	2x MIN. SOUTHERN PINE (G=0.55)	#8 WOOD SCREW	1 3/8"	1/2"

LUCAS A. TURNER, FL. P.E. 58201

LUCAS ANDREW TURNER
LICENSE
No 58201
STATE OF
FLORIDA
PROFESSIONAL ENGINEER

22

10/1/2020
Lucas A. Turner, FLPE #58201
Turner Eng. & Cons., Inc.
FBPE COA #29779
2428 Old Natchez Trc. Trl.
Camden, TN 38320
Ph. 941-380-1574

LAWSON INDUSTRIES, INC.
8501 N. W. 90th Street
Medley, FL 33166

TITLE: INSTALLATION DETAILS, FIN		
SERIES: PW-300	DRAWN BY: JML	DATE: 06/18/2019
MODEL:	SCALE: N.T.S.	DWG. NO. L-300-1901
	REV. LETTER:	SHEET SHT 12 of 12