SINGLE HUNG - LARGE MISSILE IMPACT

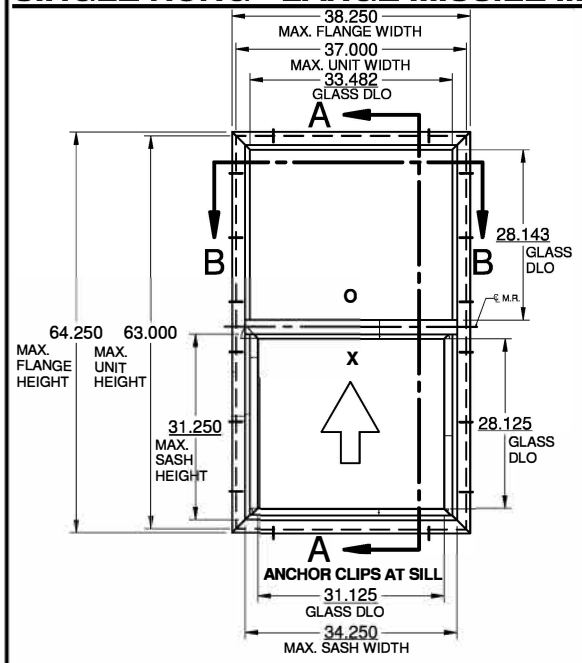

EQUAL LITE

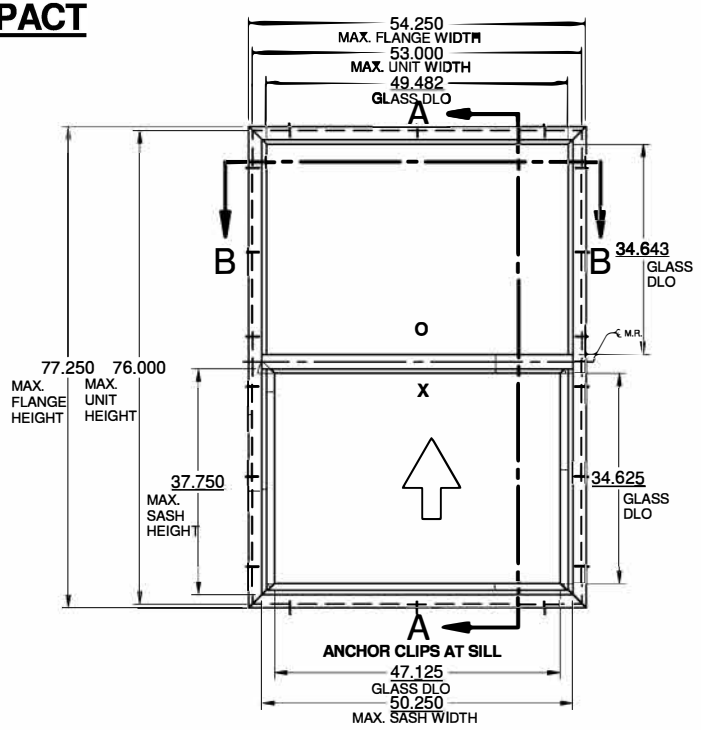

EQUAL LITE

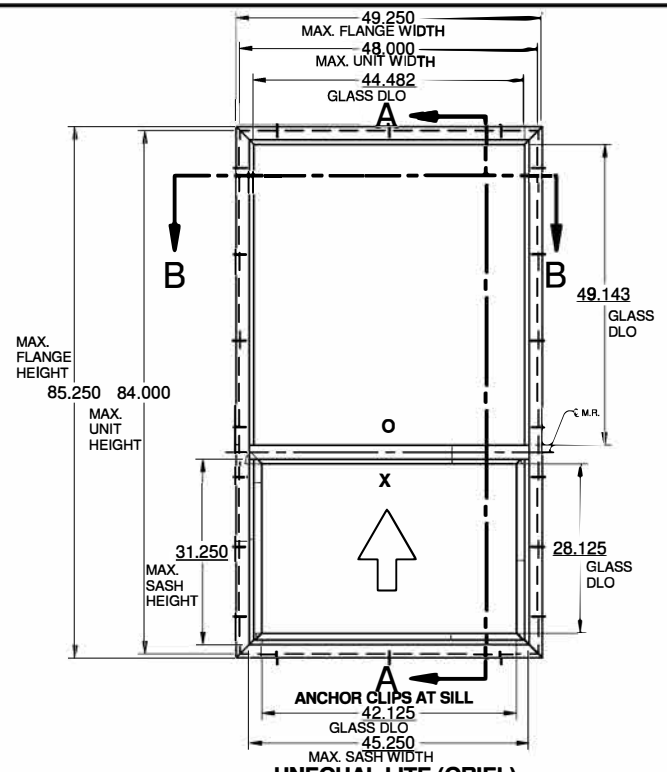

UNEQUAL LITE (ORIEL)

GENERAL NOTES:

1.) THE PRODUCT SHOWN HEREIN IS DESIGNED AND MANUFACTURED TO COMPLY WITH THE FLORIDA BUILDING CODE (FBC),CURRENT EDITION, EXCLUDING THE HIGH VELOCITY HURRICANE ZONE (HVHZ).

2.) GLAZING OPTIONS: (SEE SHT. 4)

3.) CONFIGURATIONS: "O/X

4.) DESIGN PRESSURE RATING:
-NEGATIVE DESIGN LOADS BASED ON TESTED PRESSURE AND GLASS TABLES ASTM E-1300-04/09.
-POSITIVE DESIGN LOADS BASED ON TESTED PRESSURE, WATER INFILTRATIONTEST RESSURE AND ASTM E-1300-04/09.

5.) ANCHORAGE: THE 33 $\frac{1}{3}$% STRESS INCREASE HAS NOT BEEN USED IN THE DESIGN OF THIS PRODUCT. SEE SHEET 10 FOR ANCHOR DETAILS. WINDLOAD DURATION FACTOR Cd=1.6 WAS USED FOR WOOD ANCHOR CALCULATIONS.

6.) THIS PRODUCT IS IMPACT RESISTANT FOR USE OUTSIDE THE HVHZ. IMPACT PROTECTIVE SYSTEM IS NOT REQUIRED IN WIND ZONE 3 AND BELOW WINDBORNE DEBRIS REGIONS.

7.) ALL FRAMES AND VENTS FULLY WELDED. SMALL JOINT SEALANT USED AT FIXED MEETING RAIL AND JAMB.

8.) SERIES / MODEL DESIGNATION: SH-150.

9.) THE DESIGNATION "X" OR "O" STAND FOR THE FOLLOWING:
"X" = OPERABLE SASH, "O" = FIXED.

10.) SECTION CALLOUTS APPLY TO ALL ELEVATIONS IN A SIMILAR LOCATION.

MAX. UNIT SIZE	DESIGN PRESSURE RATING	IMPACT RATING
37" x 63"	+ 65.0 / - 65.0 PSF	LARGE MISSILE
53" x 76"	+ 50.0 / - 50.0 PSF	LARGE MISSILE
48" x 84"	+ 50.0 / - 50.0 PSF	LARGE MISSILE

TABLE OF CONTENTS:

GENERAL NOTES & ELEVATIONS.....1
FIN ELEVATIONS.....2
SECTION VIEWS.....3
GLAZING DETAILS.....4
ANCHOR SCHEDULE & NOTES, FLG. & BOX..5
ANCHOR SCHEDULE & NOTES, FIN.....6
EXTRUSIONS & B.O.M.....7
INSTALLATION DETAILS., FLANGE 8
INSTALLATION DETAILS, BOX.....9
INSTALLATION DETAILS, FIN.....10

LUCAS A. TURNER, FL. P.E. 58201

Lucas Turner
2020.10.26
09:02:46 -05'00'

LUCAS ANDREW TURNER
LICENSE
No 58201
STATE OF FLORIDA
PROFESSIONAL ENGINEER

10/1/2020
Lucas A. Turner, FLPE #58201
Turner Eng. & Cons., Inc.,
FBPE COA #29779
2428 Old Natchez Trc. Trl.
Camden, TN 38320
Ph. 941-380-1574

LAWSON INDUSTRIES, INC.
8501 N. W. 90th Street
Medley, FL 33166

TITLE: GENERAL NOTES & FLANGE ELEVATIONS		
SERIES: SH-150	DRAWN BY: MCL	DATE: 06/18/2019
MODEL:	SCALE: N.T.S.	DWG. NO. L-150-1901
	REV. LETTER:	SHEET SHT 1 of 10

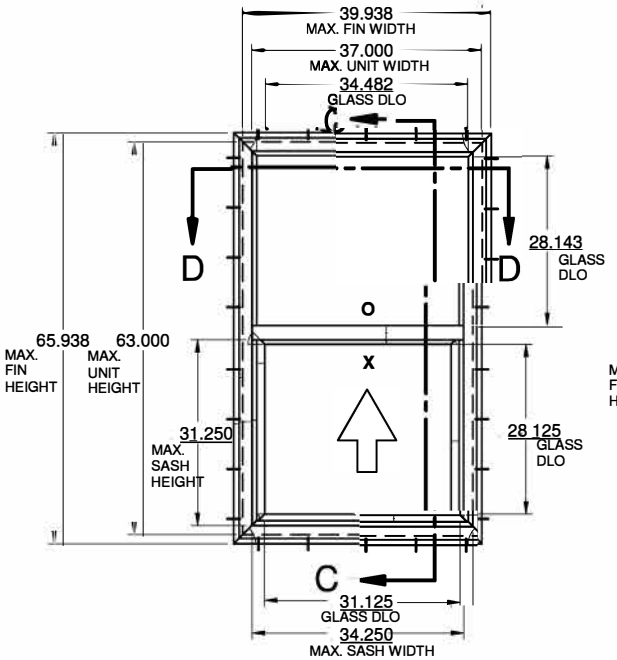

EQUAL LITE

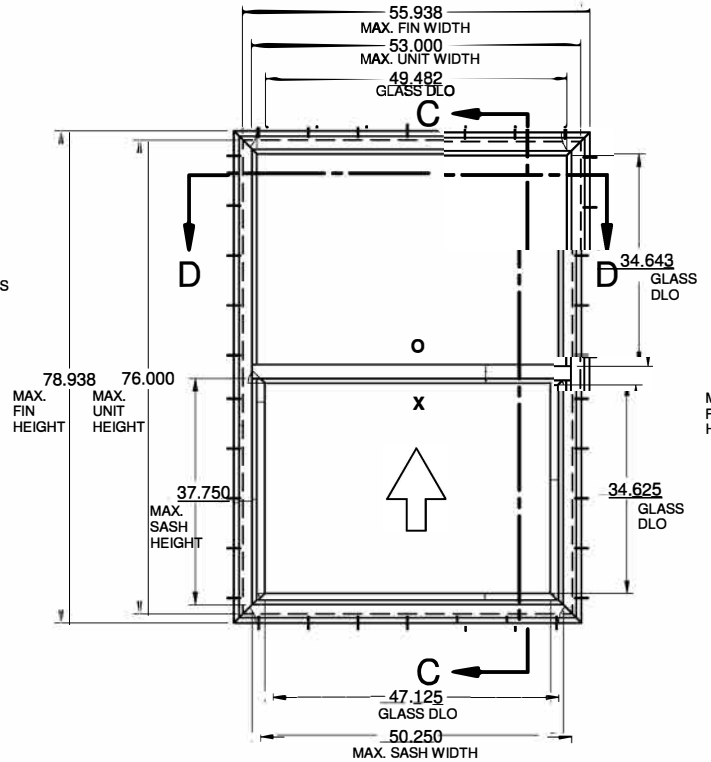

EQUAL LITE

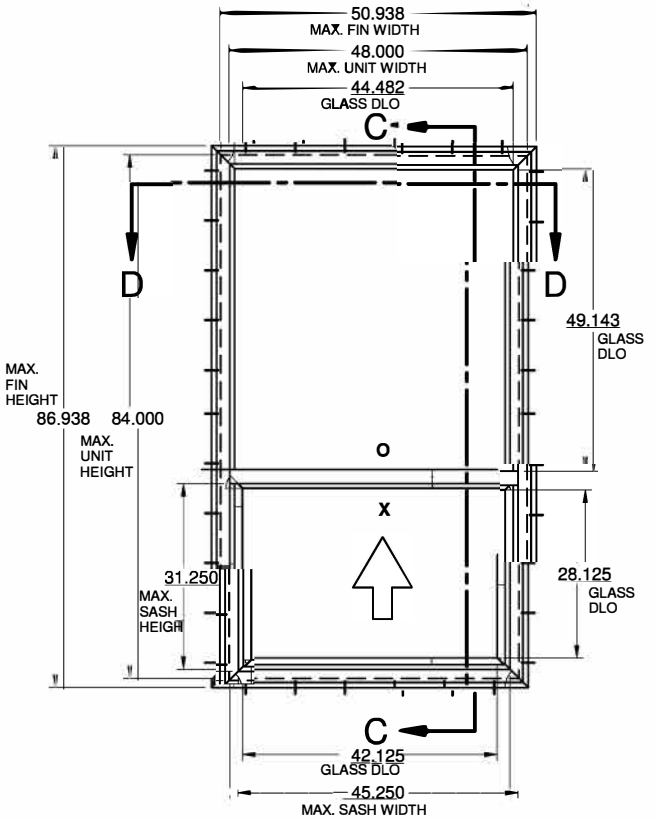

UNEQUAL LITE (ORIEL)

MAX. UNIT SIZE	DESIGN PRESSURE RATING	IMPACT RATING
37" x 63"	+ 65.0 / - 65.0 PSF	LARGE MISSILE
53" x 76"	+ 50.0 / - 50.0 PSF	LARGE MISSILE
48" x 84"	+ 50.0 / - 50.0 PSF	LARGE MISSILE

LUCAS ANDREW TURNER
LICENSE
No 58201
STATE OF FLORIDA
PROFESSIONAL ENGINEER

LUCAS A. TURNER, FL. P.E. 58201

10/1/2020
Lucas A. Turner, FLPE #58201
Turner Eng. & Cons., Inc.,
FBPE COA #29779
2428 Old Natchez Trc. Trl.
Camden, TN 38320
Ph. 941-380-1574

LAWSON INDUSTRIES, INC
8501 N. W. 90th Street
Medley, FL 33166

TITLE: NAILING FIN ELEVATIONS		
SERIES: SH-150	DRAWN BY: MCL	DATE: 06/18/2019
MODEL:	SCALE: N.T.S.	DWG. NO. L-150-1901
	REV. LETTER:	SHEET SHT 2 of 10

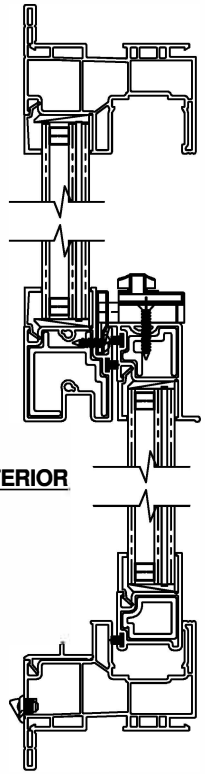

SECTION A- A
FLANGE FRAME

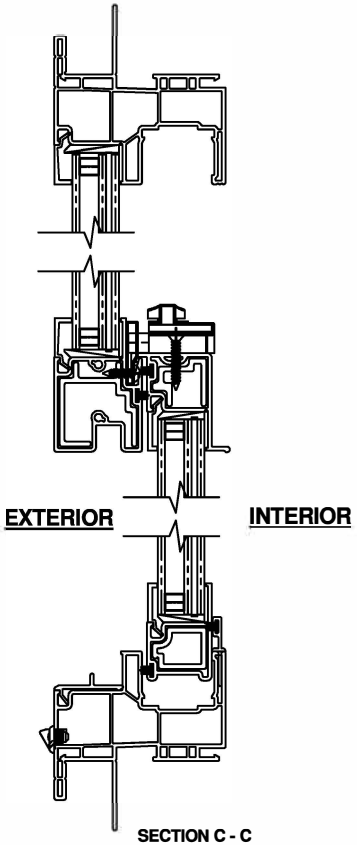

SECTION C - C
FIN / FLANGE FRAME

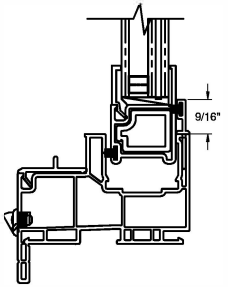

ALT. SILL RISER

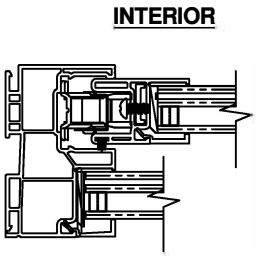

SECTION B - B
ALT. BOX FRAME

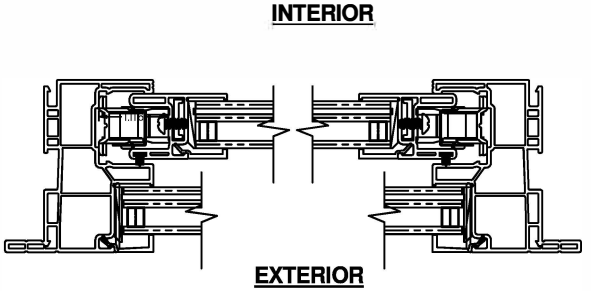

SECTION B - B
FLANGE FRAME

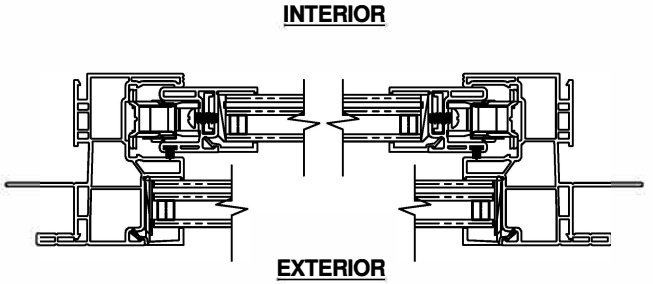

SECTION D - D
FIN / FLANGE FRAME

LUCAS ANDREW TURNER
LICENSE
No 58201
STATE OF FLORIDA
PROFESSIONAL ENGINEER

LUCAS A. TURNER, FL. P.E. 58201

10/1/2020
Lucas A. Turner, FLPE #58201
Turner Eng. & Cons., Inc.,
FBPE COA #29779
2428 Old Natchez Trc. Trl.
Camden, TN 38320
Ph. 941-380-1574

LAWSON INDUSTRIES, INC.
8501 N. W. 90th Street
Medley, FL 33166

TITLE: SECTION VIEWS		
SERIES: SH-150	DRAWN BY: MCL	DATE: 06/18/2019
MODEL:	SCALE: N.T.S.	DWG. NO. L-150-1901
	REV. LETTER:	SHEET SHT 3 of 10

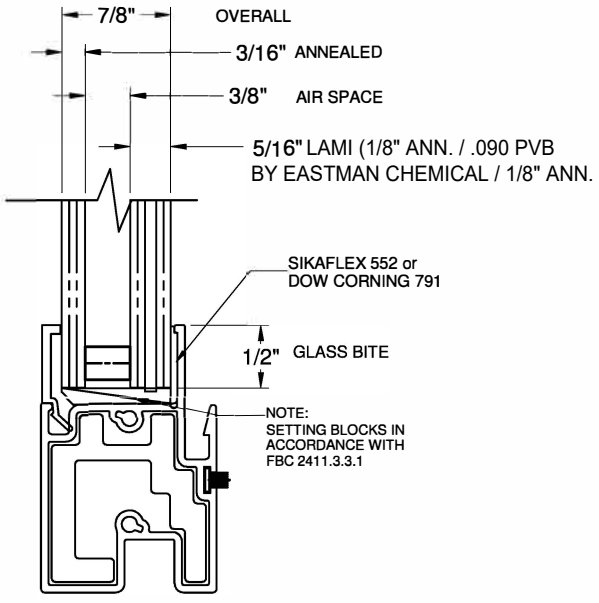

GLASS TYPE A
FIXED LITE

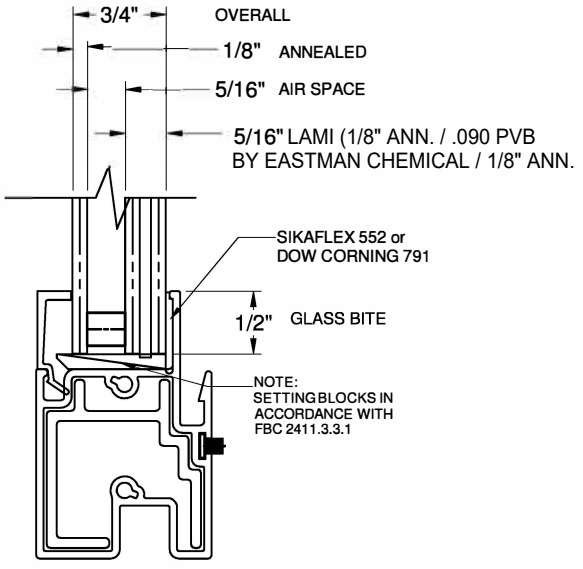

GLASS TYPE B
FIXED LITE

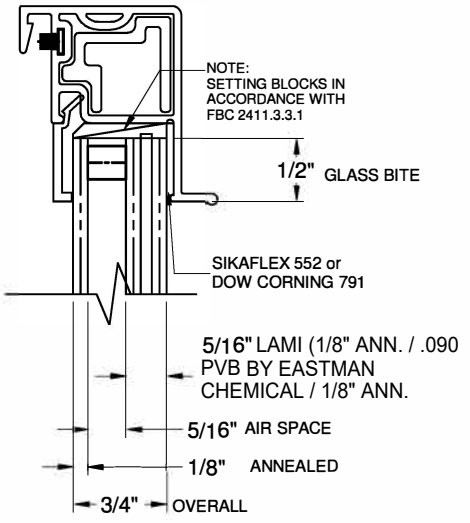

GLASS TYPE C
SASH LITE

LUCAS A. TURNER, FL. P.E. 58201

MAX. UNIT SIZE	DESIGN PRESSURE RATING	FIXED GLASS TYPE	SASH GLASS TYPE	FMR REINF.	SMR REINF.
37" x 63"	+ 65.0 / - 65.0 PSF	B	C	FS-10104	LII-217
53" x 76"	+ 50.0 / - 50.0 PSF	B	C	FS-10103	LII-216
48" x 84"	+ 50.0 / - 50.0 PSF	A	C	FS-10103	LII-216

10/1/2020
Lucas A. Turner, FLPE #58201
Turner Eng. & Cons., Inc.,
FBPE COA #29779
2428 Old Natchez Trc. Trl.
Camden, TN 38320
Ph. 941-380-1574

LAWSON INDUSTRIES, INC.
8501 N. W. 90th Street
Medley, FL 33166

TITLE: GLAZING DETAILS		
SERIES: SH-150	DRAWN BY: MCL	DATE: 06/18/2019
MODEL:	SCALE: N.T.S.	DWG. NO. L-150-1901
	REV. LETTER:	SHEET SHT 4 of 10

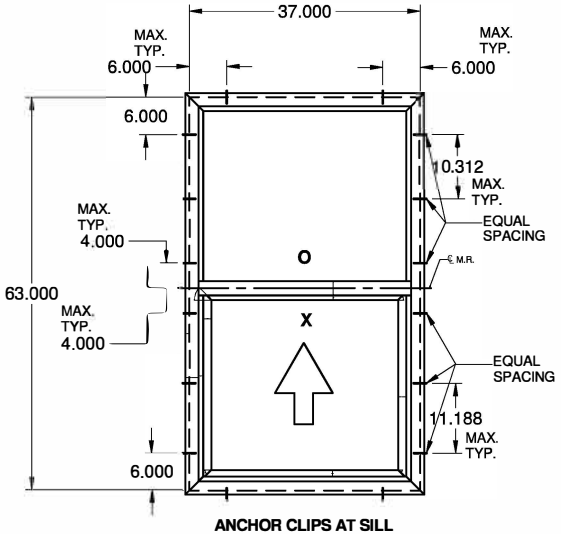

ANCHOR CLIPS AT SILL

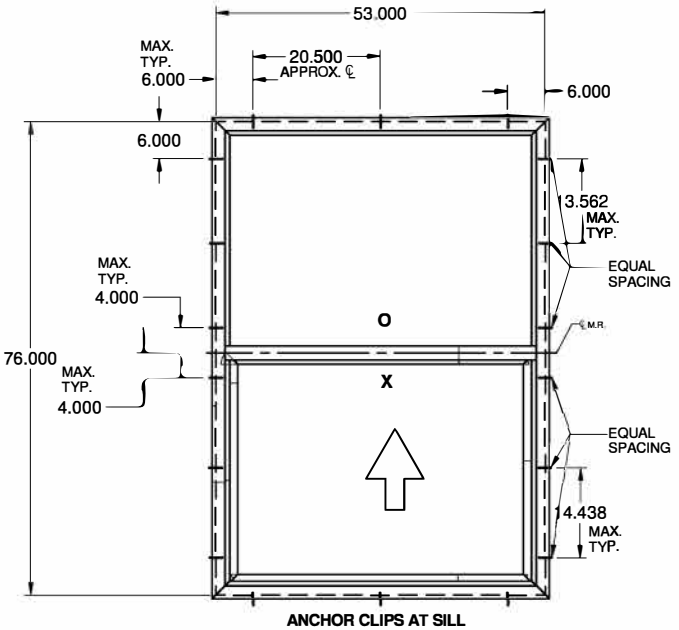

ANCHOR CLIPS AT SILL

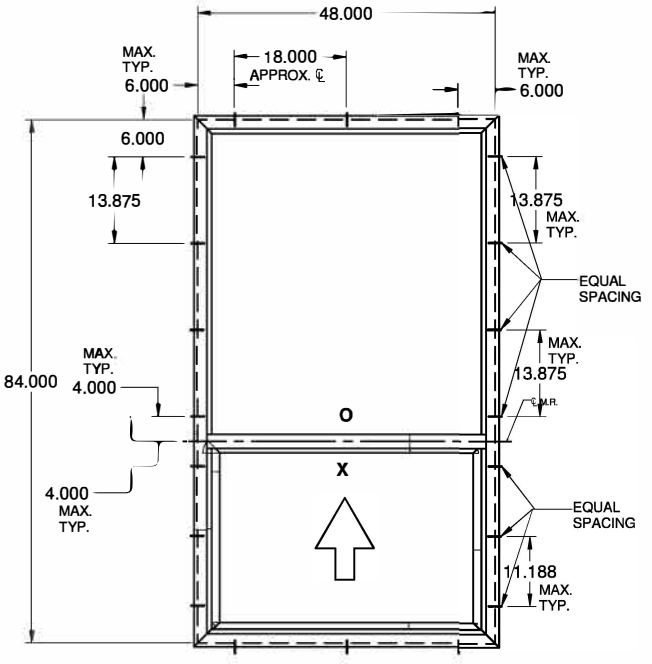

ANCHOR CLIPS AT SILL

NOTES:

1.) INSTALL ONE ANCHOR AT EACH INSTALLATION LOCATION.

2.) SHIM AS REQUIRED AT EACH INSTALLATION ANCHOR USING LOAD BEARING SHIMS. MAX. ALLOWABLE SHIM STACK TO BE $\frac{1}{4}$".

USE SHIMS WHERE SPACE GREATER THAT $\frac{1}{16}$" IS PRESENT. LOAD BEARING SHIMS SHALL BE CONSTRUCTED OF HIGH DENSITY PLASTIC OR BETTER. WOOD SHIMS ARE NOT ALLOWED.

3.) ANCHOR TYPE, SIZE, SPACING AND EMBEDMENT SHALL BE AS SPECIFIED IN THESE DRAWINGS, SEE TABLE 1, SHEET 10.

4.) ALL INSTALLATIN ANCHORS MUST BE MADE OF OR PROTECTED WITH A CORROSION RESISTANT MATERIAL OR COATING. DISSIMILAR METALS OR MATERIALS IN CONTACT WITH PRESSURE TREATED WOOD MUST BE PROTECTED TO PREVENT REACTION.

5.) INSTALLATION ANCHORS SHALL BE IN ACCORDANCE WITH ANCHOR MANUFACTURER'S INSTALLATION INSTRUCTIONS, AND ACNHORS SHALL NOT BE USED IN SUBSTRATES WITH STRENGTHS LESS THAN THE MINIMUM SPECIFIED IN TABLE 1, SHEET 10.

6.) ANCHOR EMBEDMENT TO SUBSTRATE SHALL BE BEYOND WALL DRESSING OR STUCCO. FOR CONCRETE / CMU OPENINGS, EMBEDMENT SHALL BE BEYOND WOOD BUCKS, IF USED, INTO SUBSTRATE. INSTALLATIONS INTO SOLID CONCRETE OR GROUT-FILLED CMU MAY INCLUDE, BUT DO NOT REQUIRE 1X WOOD BUCKS BETWEEN THE PRODUCT AND THE SUBSTRATE. INSTALLATIONS INTO HOLLOW CMU REQUIRE THE USE OF 1X BUCKS BETWEEN THE PRODUCT AND SUBSTRATE.

7.) A MINIMUM CENTER-TO-CENTER SPACING SHALL BE MAINTAINED BETWEEN ALL FASTENERS: 4 FOR MASONRY, 1" FOR WOOD AND METAL.

8.) WOOD OR MASONRY OPENINGS, BUCKS AND BUCK FASTENERS SHALL BE PROPERLY DESIGNED BY THE ARCHITECT OR ENGINEER OF RECORD AND INSTALLED TO TRASFER WIND LOADS TO THE STRUCTURE. SUBSTRATES SHALL MEET THE MINIMUM STRENGTH REQUIREMENTS AS SHOWN IN TABLE 1, SHEET 11. CONCRETE AND MASONRY SUBSTRATES MAY NOT BE CRACKED.

9.) SEALING AND FLASHING STRATEGIES FOR OVERALL WATER RESISTANCE OF INSTALLATION SHALL BE DONE BY OTHER FOLLOWING THE CURRENT VERSION OF THE REFERENCED DOCUMENTS: FMA/AAMA 100 (FIN WINDOWS), FMA/AAMA 200 (FLANGE WINDOWS), FMA/WDMA 250 (BOX WINDOWS), FMA/AAMA/WDMA 300 (EXTERIOR DOORS).

LUCAS A. TURNER, FL. P.E. 58201

10/1/2020
Lucas A. Turner, FLPE #58201
Turner Eng. & Cons., Inc.,
FBPE COA #29779
2428 Old Natchez Trc. Trl.
Camden, TN 38320
Ph. 941-380-1574

LAWSON INDUSTRIES, INC.
8501 N. W. 90th Street
Medley, FL 33166

TITLE: ANCHOR SCHEDULE & NOTES, FLANGE & BOX		
SERIES: SH-150	DRAWN BY: MCL	DATE: 06/18/2019
MODEL:	SCALE: N.T.S.	DWG. NO. L-150-1901
	REV. LETTER:	SHEET SHT 5 of 10

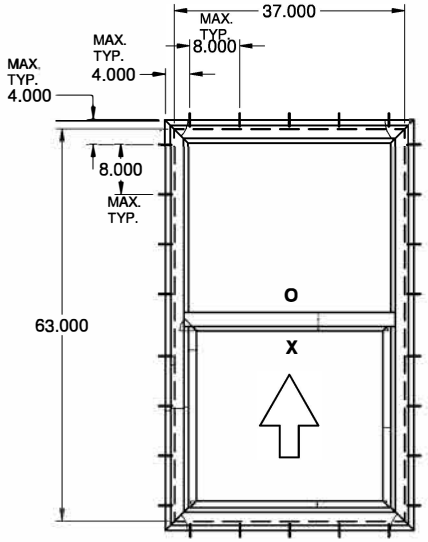

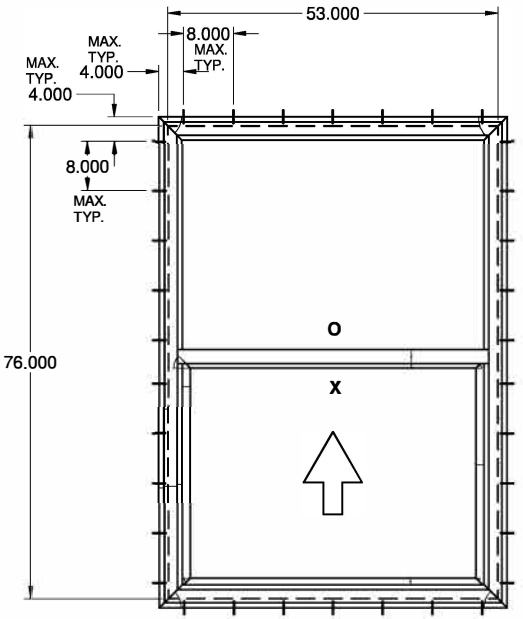

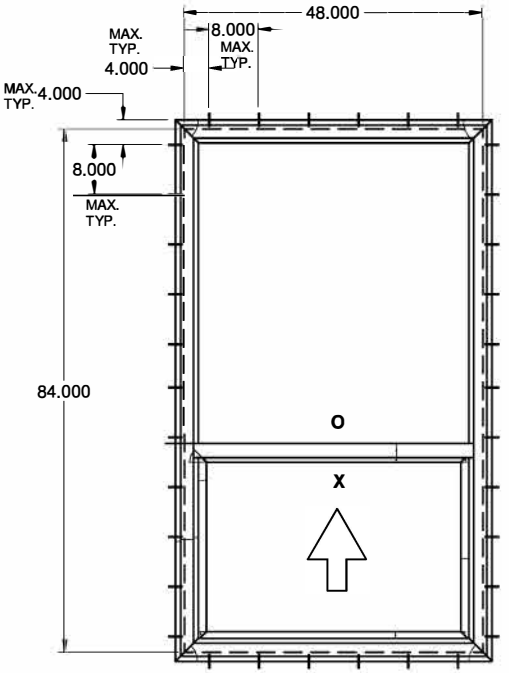

NOTES:

1.) INSTALL ONE ANCHOR AT EACH INSTALLATION LOCATION.

2.) SHIM AS REQUIRED AT EACH INSTALLATION ANCHOR USING LOAD BEARING SHIMS. MAX. ALLOWABLE SHIM STACK TO BE $\frac{1}{4}$".

USE SHIMS WHERE SPACE GREATER THAT $\frac{1}{16}$" IS PRESENT. LOAD BEARING SHIMS SHALL BE CONSTRUCTED OF HIGH DENSITY PLASTIC OR BETTER. WOOD SHIMS ARE NOT ALLOWED.

3.) ANCHOR TYPE, SIZE, SPACING AND EMBEDMENT SHALL BE AS SPECIFIED IN THESE DRAWINGS, SEE TABLE 1, SHEET 10.

4.) ALL INSTALLATIN ANCHORS MUST BE MADE OF OR PROTECTED WITH A CORROSION RESISTANT MATERIAL OR COATING. DISSIMILAR METALS OR MATERIALS IN CONTACT WITH PRESSURE TREATED WOOD MUST BE PROTECTED TO PREVENT REACTION.

5.) INSTALLATION ANCHORS SHALL BE IN ACCORDANCE WITH ANCHOR MANUFACTURER'S INSTALLATION INSTRUCTIONS, AND ACNHORS SHALL NOT BE USED IN SUBSTRATES WITH STRENGTHS LESS THAN THE MINIMUM SPECIFIED IN TABLE 1, SHEET 10.

6.) ANCHOR EMBEDMENT TO SUBSTRATE SHALL BE BEYOND WALL DRESSING OR STUCCO. FOR CONCRETE / CMU OPENINGS, EMBEDMENT SHALL BE BEYOND WOOD BUCKS, IF USED, INTO SUBSTRATE. INSTALLATIONS INTO SOLID CONCRETE OR GROUT-FILLED CMU MAY INCLUDE, BUT DO NOT REQUIRE 1X WOOD BUCKS BETWEEN THE PRODUCT AND THE SUBSTRATE. INSTALLATIONS INTO HOLLOW CMU REQUIRE THE USE OF 1X BUCKS BETWEEN THE PRODUCT AND SUBSTRATE.

7.) A MINIMUM CENTER-TO-CENTER SPACING SHALL BE MAINTAINED BETWEEN ALL FASTENERS: 4 FOR MASONRY, 1" FOR WOOD AND METAL.

8.) WOOD OR MASONRY OPENINGS, BUCKS AND BUCK FASTENERS SHALL BE PROPERLY DESIGNED BY THE ARCHITECT OR ENGINEER OF RECORD AND INSTALLED TO TRASFER WIND LOADS TO THE STRUCTURE. SUBSTRATES SHALL MEET THE MINIMUM STRENGTH REQUIREMENTS AS SHOWN IN TABLE 1, SHEET 11. CONCRETE AND MASONRY SUBSTRATES MAY NOT BE CRACKED.

9.) SEALING AND FLASHING STRATEGIES FOR OVERALL WATER RESISTANCE OF INSTALLATION SHALL BE DONE BY OTHER FOLLOWING THE CURRENT VERSION OF THE REFERENCED DOCUMENTS: FMA/AAMA 100 (FIN WINDOWS), FMA/AAMA 200 (FLANGE WINDOWS), FMA/WDMA 250 (BOX WINDOWS), FMA/AAMA/WDMA 300 (EXTERIOR DOORS).

LUCAS ANDREW TURNER
LICENSE
No 58201
STATE OF FLORIDA
PROFESSIONAL ENGINEER

LUCAS A. TURNER, FL. P.E. 58201

10/1/2020
Lucas A. Turner, FLPE #58201
Turner Eng. & Cons., Inc.,
FBPE COA #29779
2428 Old Natchez Trc. Trl.
Camden, TN 38320
Ph. 941-380-1574

LAWSON INDUSTRIES, INC.
8501 N. W. 90th Street
Medley, FL 33166

TITLE: ANCHOR SCHEDULE & NOTES, NAILING FIN		
SERIES: SH-150	DRAWN BY: MCL	DATE: 06/18/2019
MODEL:	SCALE: N.T.S.	DWG. NO. L-150-1901
	REV. LETTER:	SHEET SHT 6 of 10

BILL OF MATERIALS

Item	Description	Material	Vendor	Vendor #
1	Frame, Head	Rigid PVC	MIKRON	10863
2	Frame, Sill	Rigid PVC	MIKRON	10863
3	Frame, Jamb	Rigid PVC	MIKRON	10863
4	Fixed Meeting Rail	Rigid PVC	MIKRON	10864
5a	Reinf., FMR, Std.	Alum.	KEYMARK	FS-10104
5b	Reinf., FMR, HD	Alum.	KEYMARK	FS-10103
6	Sash Meeting Rail	Rigid PVC	MIKRON	9532
7a	Reinf., SMR, Std.	Alum.	PROFILE	LII-217
7b	Reinf., SMR, HD	Alum.	PROFILE	LII-216
8	Sash Bottom Rail	Rigid PVC	MIKRON	9531
9	Reinf., Sash Bot. Rail	Alum.	PROFILE	LII-215
10	Vent Stile	Rigid PVC	MIKRON	9530
11	Reinf., Vent Stile	Alum.	PROFILE	LII-218
12	Glazing Bead, 3/4' (Fixed)	Rigid PVC	MIKRON	8483
13	Glazing Bead, 3/4' (Sash)	Rigid PVC	MIKRON	5927
14	Adapter, Screen w/ Nib	Rigid PVC	MIKRON	10865
15	Adapter, Screen w/o Nib	Rigid PVC	MIKRON	10867
16	Cover/ Sash Stop	Rigid PVC	MIKRON	9612
17	Balance, Block & Tackle		VARIES	
18	Take Out Clip		CALDWELL	
19	Sash Cam		LAWSON	
20	Lock		LAWRENCE	
21	Keeper		LAWRENCE	
22	Weep Assembly		PREFERRED ENG.	
23	Wstp., 0.180 x 0.187 back, Soft Fin			
24	#8 x 2.000, PhTrWashHd, SMS			
25	#6 x 0.500, PhPh, SMS			
26	#6 x 0.875, PhFh, SMS			
27	#8 x 0.375, PhPh, B, SMS			
38	Sill Riser, 1/2"	Alum.	PROFILE	LII-229
39	Sill Anchor Clip	Alum.	PROFILE	LII-226

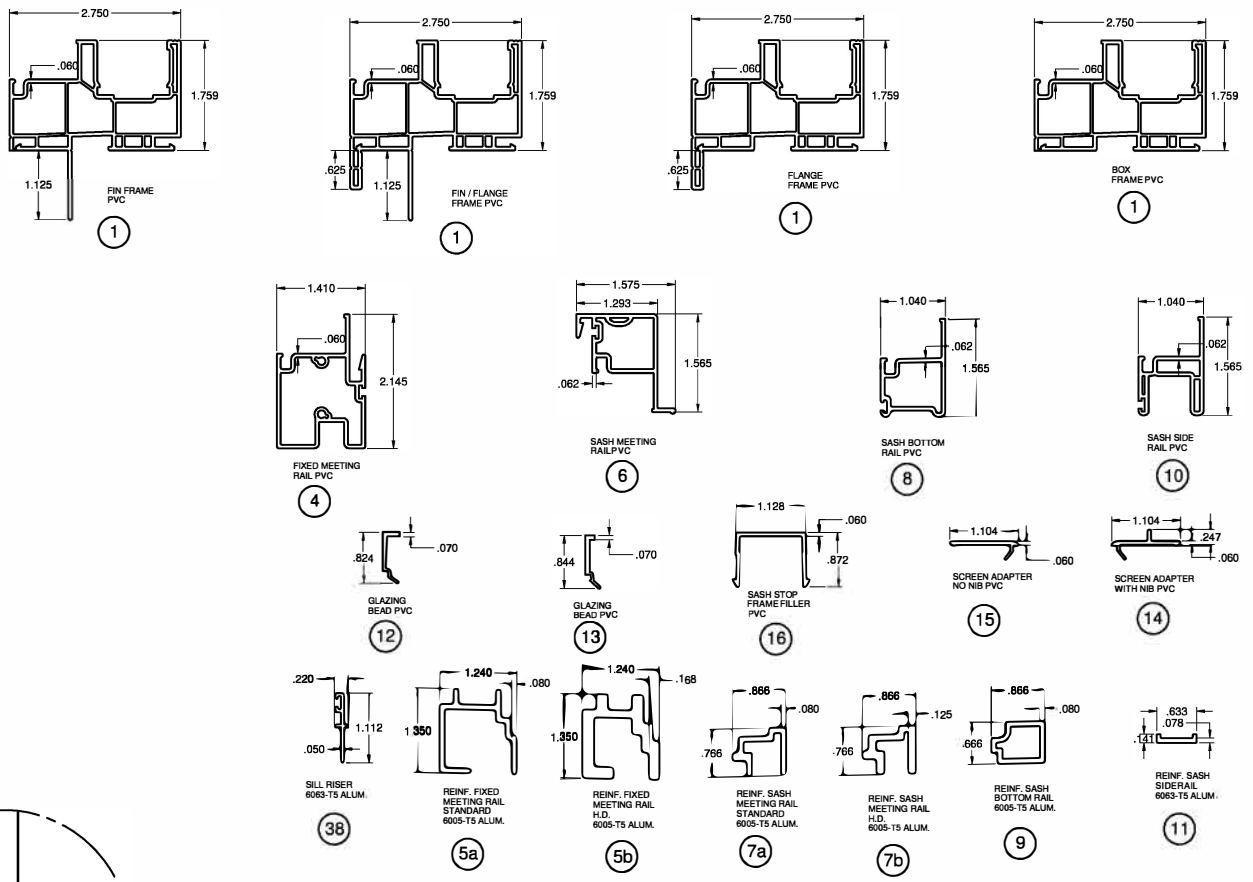

FRAME CORNER CONSTRUCTION

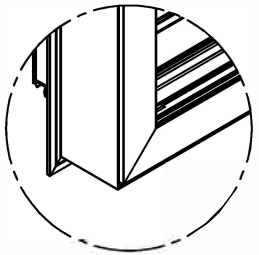

CORNER WELD
ALL FOUR SIDES

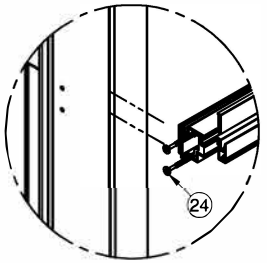

FIXED MEETING RAIL
SCREWED TO FRAME

LUCAS A. TURNER, FL. P.E. 58201

LUCAS ANDREW TURNER LICENSE No 58201 STATE OF FLORIDA PROFESSIONAL ENGINEER

10/1/2020
Lucas A. Turner, FLPE #58201
Turner Eng. & Cons., Inc.,
FBPE COA #29779
2428 Old Natchez Trc. Trl.
Camden, TN 38320
Ph. 941-380-1574

LAWSON INDUSTRIES, INC.
8501 N. W. 90th Street
Medley, FL 33166

TITLE: EXTRUSIONS & B.O.M.		
SERIES: SH-150	DRAWN BY: MCL	DATE: 06/18/2019
MODEL:	SCALE: N.T.S.	DWG. NO. L-150-1901
	REV. LETTER:	SHEET SHT 7 of 10

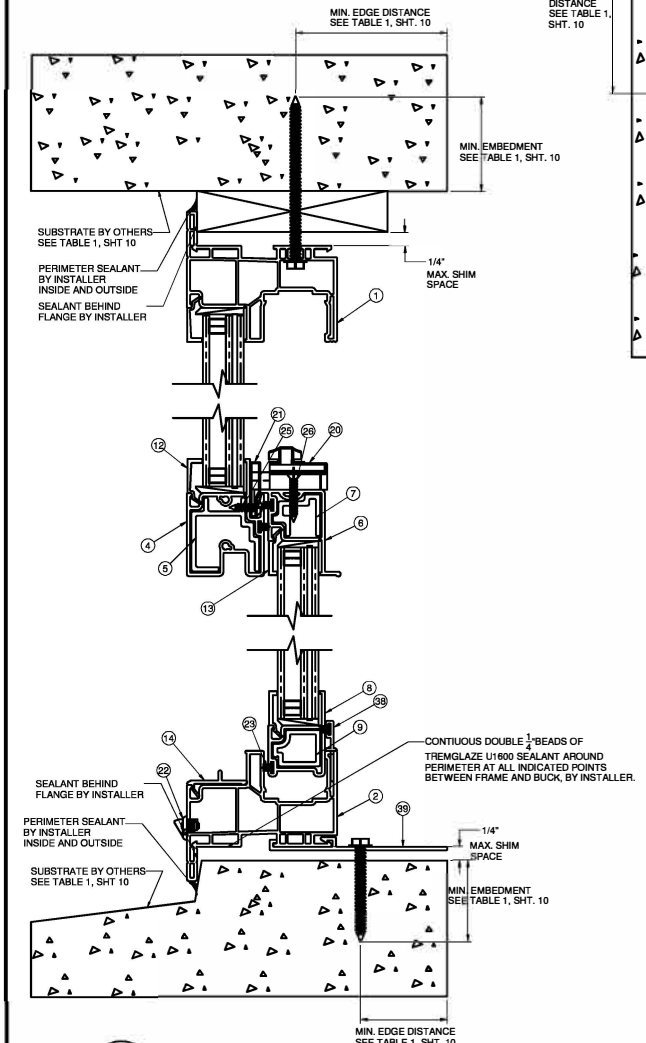

A / 9 VERTICAL SECTION
TYPICAL SILL & HEAD ANCHORAGE
THRU-FRAME
FLANGE CONCRETE / CMU

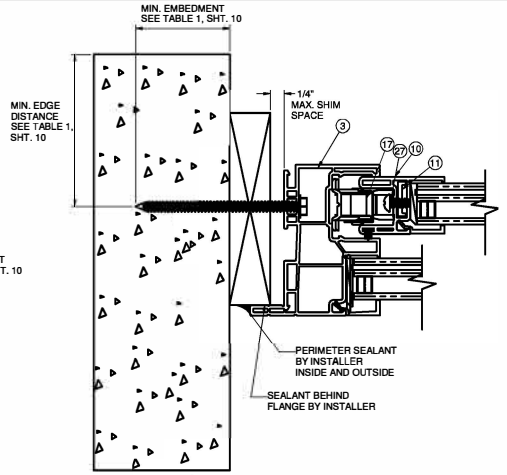

B / 9 HORIZONTAL SECTION
TYPICAL JAMB ANCHORAGE
THRU-FRAME
FLANGE CONCRETE / CMU

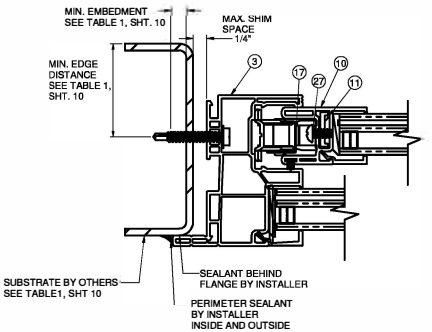

D / 9 HORIZONTAL SECTION
TYPICAL JAMB ANCHORAGE
THRU-FRAME
FLANGE METAL FRAMING
HEAD & SILL DETAILS SIMILAR
(NO ANCHOR REQUIRED AT SILL)

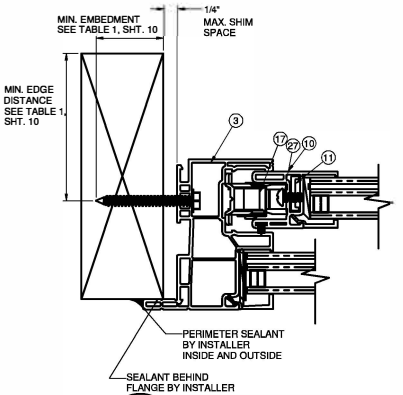

C / 9 HORIZONTAL SECTION
TYPICAL JAMB ANCHORAGE
THRU-FRAME
FLANGE WOOD FRAMING
HEAD & SILL DETAILS SIMILAR
(NO ANCHOR REQUIRED AT SILL)

LUCAS A. TURNER, FL. P.E. 58201

LUCAS ANDREW TURNER
LICENSE
No 58201
STATE OF
FLORIDA
PROFESSIONAL ENGINEER

10/1/2020
Lucas A. Turner, FLPE #58201
Turner Eng. & Cons., Inc.,
FBPE COA #29779
2428 Old Natchez Trc. Trl.
Camden, TN 38320
Ph. 941-380-1574

LAWSON INDUSTRIES, INC.
8501 N. W. 90th Street
Medley, FL 33166

TITLE: INSTALLATION DETAILS, FLANGE		
SERIES: SH-150	DRAWN BY: MCL	DATE: 06/18/2019
MODEL:	SCALE: N.T.S.	DWG. NO. L-150-1901
	REV. LETTER:	SHEET SHT 8 of 10

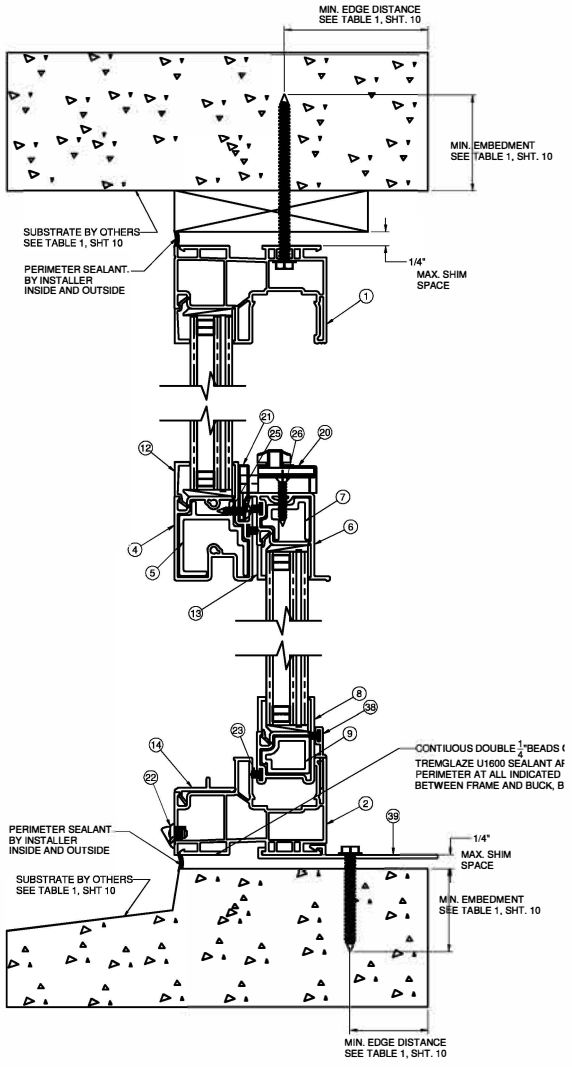

A 10 VERTICAL SECTION
TYPICAL SILL & HEAD ANCHORAGE
THRU-FRAME
BOX CONCRETE / CMU

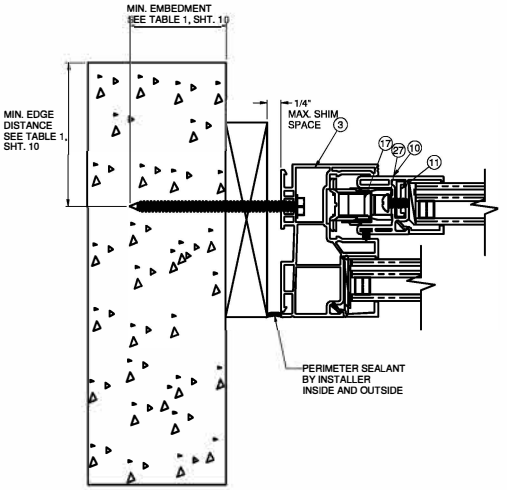

B 10 HORIZONTAL SECTION
TYPICAL JAMB ANCHORAGE
THRU-FRAME
BOX FRAME CONCRETE / CMU

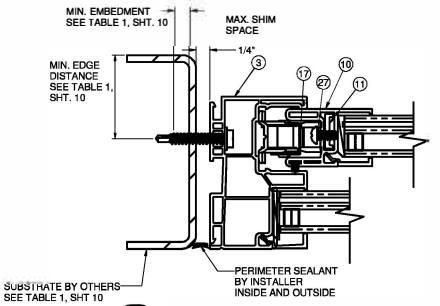

D 10 HORIZONTAL SECTION
TYPICAL JAMB ANCHORAGE
THRU-FRAME
BOX FRAME METAL FRAMING
HEAD & SILL DETAILS SIMILAR
(NO ANCHOR REQUIRED AT SILL)

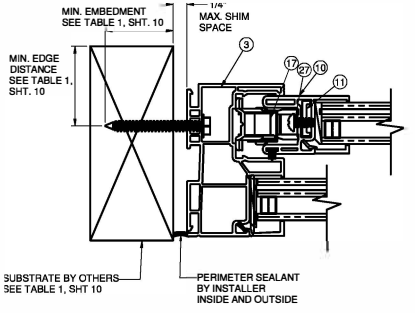

C 10 HORIZONTAL SECTION
TYPICAL JAMB ANCHORAGE
THRU-FRAME
BOX WOOD FRAMING
HEAD & SILL DETAILS SIMILAR
(NO ANCHOR REQUIRED AT SILL)

LUCAS A. TURNER, FL. P.E. 58201

LUCAS ANDREW TURNER
LICENSE
No 58201
STATE OF
FLORIDA
PROFESSIONAL ENGINEER

10/1/2020
Lucas A. Turner, FLPE #58201
Turner Eng. & Cons., Inc.,
FBPE COA #29779
2428 Old Natchez Trc. Trl.
Camden, TN 38320
Ph. 941-380-1574

LAWSON INDUSTRIES, INC.
8501 N. W. 90th Street
Medley, FL 33166

TITLE: INSTALLATION DETAILS, BOX		
SERIES: SH-150	DRAWN BY: MCL	DATE: 06/18/2019
MODEL:	SCALE: N.T.S.	DWG. NO. L-150-1901
	REV. LETTER:	SHEET SHT 9 of 10

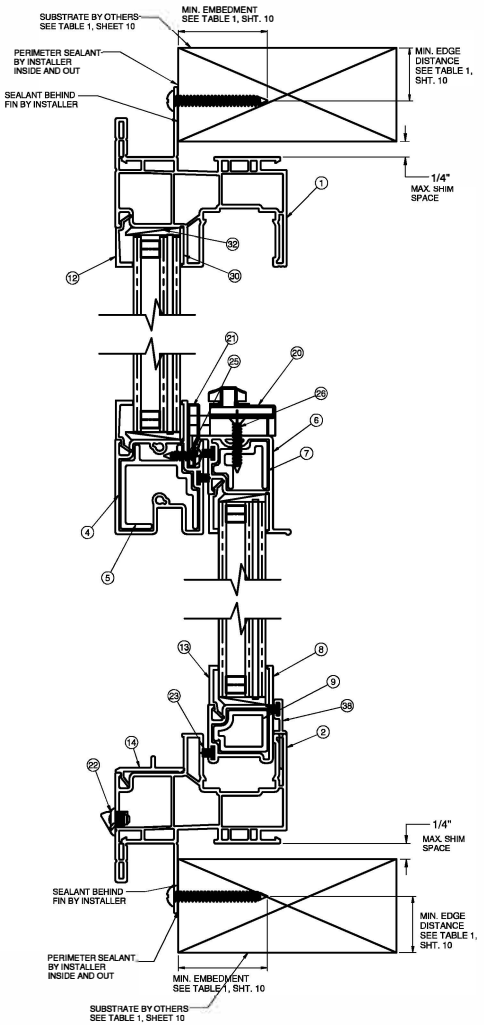

A / 11 VERTICAL SECTION

TYPICAL SILL & HEAD ANCHORAGE
THRU-FIN
FIN / FLANGE WOOD FRAMING

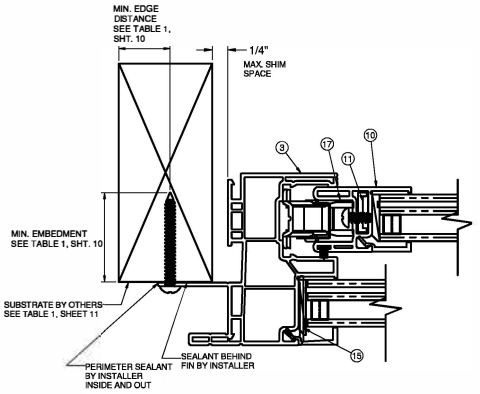

B / 11 HORIZONTAL SECTION

TYPICAL JAMB ANCHORAGE
THRU-FIN
FIN / FLANGE WOOD FRAMING

TABLE 1: APPROVED INSTALLATION FASTENERS

THRU	SUBSTRATE TYPE	ANCHOR TYPE	MIN. EMBEDMENT	MIN. EDGE DIST.
FRAME	CONCRETE (2.0 KSI MIN.)	3/16" ITW TAPCON	1 1/2"	1 1/8"
FRAME	HOLLOW OR GROUT-FILLED CMU (1 17 PCF MIN.)	3/16" ITW TAPCON	1 "	2 "
FRAME	CONCRETE (2.85 KSI MIN.)	3/16" ELCO ULTRACON	1 "	1 "
FRAME	GROUT-FILLED CMU (ASTM C-90)	3/16" ELCO ULTRACON	1 3/4"	2 1/2"
FRAME	2x MIN. SOUTHERN PINE (G-0.55)	3/16" ITW TAPCON OR ELCO ULTRACON	1 3/8"	7/8"
FRAME	2x MIN. SOUTHERN PINE (G-0.55)	#10 WOOD SCREW	1 3/8"	7/8"
FRAME	16 GAUGE (0.060) MIN. STEEL STUD (33 KSI YIELD MIN.)	#10-16 HILTI KWIK-FLEX OR ITW TEKS-SELF DRILLING SCREW	FULL THREAD THRU 0.060	1/2"
FRAME	1/8" ALUM. (6063-T5 MIN.) OR 1/8" STEEL (33 KSI MIN.)	#10 GRADE 5 SELF-TAPPING / DRILLING SCREW	FULL THREAD THRU 0.125	1/2"
FIN	2x MIN. SOUTHERN PINE (G=0.55)	#8 WOOD SCREW	1 3/8"	7/8"

LUCAS A. TURNER, FL. P.E. 58201

LUCAS ANDREW TURNER LICENSE No 58201 STATE OF FLORIDA PROFESSIONAL ENGINEER

10/1/2020
Lucas A. Turner, FLPE #58201
Turner Eng. & Cons., Inc.,
FBPE COA #29779
2428 Old Natchez Trc. Trl.
Camden, TN 38320
Ph. 941-380-1574

LAWSON INDUSTRIES, INC.
8501 N. W. 90th Street
Medley, FL 33166

TITLE: INSTALLATION DETAILS, FIN		
SERIES: SH-150	DRAWN BY: MCL	DATE: 06/18/2019
MODEL:	SCALE: N.T.S.	DWG. NO. L-150-1901
	REV. LETTER:	SHEET SHT 10 of 10