intertek
Total Quality. Assured.

Report #: I7021-550-18
Date: 12/14/18
Verified by:

DESIGN PRESSURE = +/- 70 PSF

2748
95438-147

CERTIFICATION TEST UNITS
KAWNEER 1600 Wall System™ 1 - 7 3/16" DEPTH
HURRICANE IMPACT TESTING, ZONE 4, LEVEL E
ASTM E 1886 / 1996 & TAS 201, 202, 203
1 5/16" GLAZING

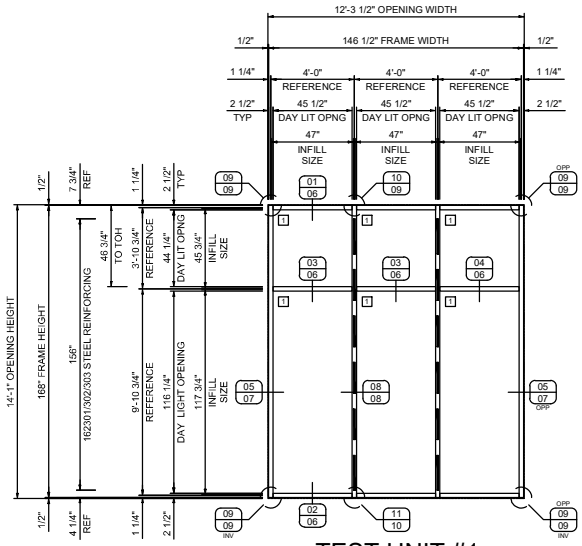

TEST UNIT #1

AIR, WATER, STRUCTURAL, LMI CYCLE
KAWNEER 1600 Wall System™1
7 13/16" SYSTEM DEPTH
ONE (1) THUS REQUIRED

GLAZING SCHEDULE

TYPE	NOMINAL THICKNESS	TYPICAL THICKNESS	DESCRIPTION
1	1 5/16"	1.2710	1/4 " FT OUTBOARD / 1/2" SPACER/ 3/16" HS INBOARD / 0.180 KURARAY SG / 3/16" HS INBOARD
INFILL SIZE = SEE ELEVATION			

NOTES

1. FINISH TO BE #17 CLEAR ANODIZED.
2. ALL MATERIAL TO BE FACTORY FABRICATED. ASSEMBLED, GLAZED, AND INSTALLED IN WOOD BUCKS ON SITE.
3. SEE SHEETS 03 AND 04 OF 10 FOR TEST SCHEDULES.
4. SEE SHEET 05 OF 10 FOR MATERIAL LIST AND TYPICAL GLAZING DETAIL.
5. SEE SHEETS 06 THRU 08 OF 10 FOR DETAILS.
6. SEE SHEET 09 AND 10 OF 10 FOR FASTENER/ANCHOR DETAILS.

REV.	DATE	DESCRIPTION	BY

EC: 95449-133 ESTABLISHED 12/07/18

CONFIDENTIAL AND PROPRIETARY INFORMATION KAWNEER COMPANY INC.

THESE DRAWINGS ARE THE SOLE AND EXCLUSIVE PROPERTY OF KAWNEER AND CONTAIN SENSITIVE, PRIVILEGED OR CONFIDENTIAL INFORMATION WHICH MAY BE USED ONLY FOR ITS BENEFIT. THE DISCLOSURE OF THESE DRAWINGS TO UNAUTHORIZED PERSONS IS STRICTLY PROHIBITED. THIS DOCUMENT AND ALL COPIES MUST BE RETURNED UPON DEMAND. © COPYRIGHT KAWNEER COMPANY, INC., 2018

THIS DRAWING IS FOR HURRICANE RESISTANT PRODUCT TESTING ONLY

KAWNEER
555 GUTHRIDGE COURT
NORCROSS, GEORGIA 30092
PHONE (770) 449-5555
FAX (770) 734-1560

TEST UNIT DRAWINGS
KAWNEER 1600 Wall System™1 - 7 13/16"
ASTM E1886/1996 - ZONE 4, LEVEL E
TAS 201 / 202 / 203

SCALE:

DRAWN BY: WJM
DATE: 05/11/2018
DRWG. NO.: T162963
SHEET: 01 OF 10

Report #:	I7021-550-18
Date:	12/14/18
Verified by:	

intertek Total Quality. Assured.

DESIGN PRESSURE = +/- 90 PSF

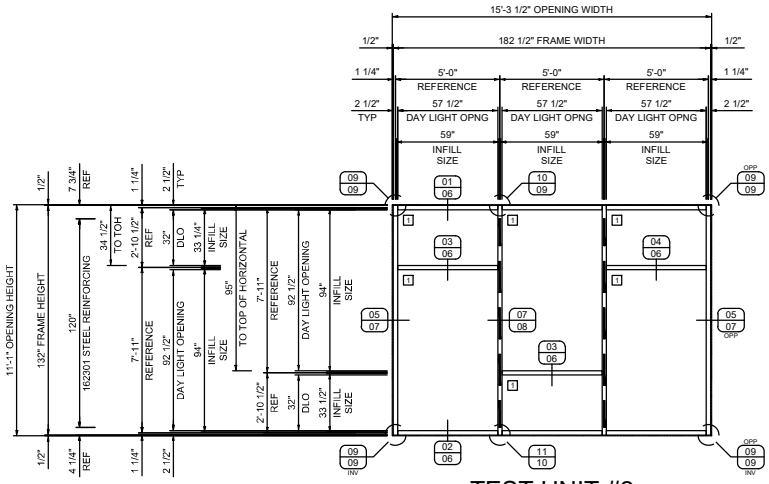

TEST UNIT #2

STRUCTURAL, LMI CYCLE
KAWNEER 1600 Wall System™1
7 13/16" SYSTEM DEPTH
ONE (1) THUS REQUIRED

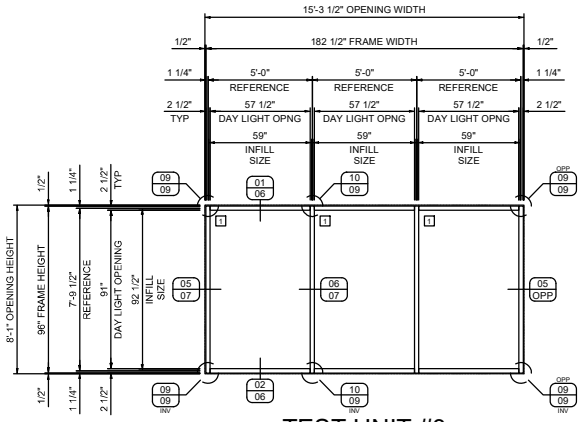

TEST UNIT #3

STRUCTURAL, LMI CYCLE
KAWNEER 1600 Wall System™1
7 13/16" SYSTEM DEPTH
ONE (1) THUS REQUIRED

REV.	DATE	DESCRIPTION	BY

EC: 95449-133 ESTABLISHED 12/07/18

CONFIDENTIAL AND PROPRIETARY INFORMATION KAWNEER COMPANY INC.

THESE DRAWINGS ARE THE SOLE AND EXCLUSIVE PROPERTY OF KAWNEER AND CONTAIN SENSITIVE, PRIVILEGED OR CONFIDENTIAL INFORMATION WHICH MAY BE USED ONLY FOR ITS BENEFIT. THE DISCLOSURE OF THESE DRAWINGS TO UNAUTHORIZED PERSONS IS STRICTLY PROHIBITED. THIS DOCUMENT AND ALL COPIES MUST BE RETURNED UPON DEMAND. © COPYRIGHT KAWNEER COMPANY, INC., 2018

THIS DRAWING IS FOR HURRICANE RESISTANT PRODUCT TESTING ONLY

KAWNEER
555 GUTHRIDGE COURT
NORCROSS, GEORGIA 30092
PHONE (770) 449-5555
FAX (770) 734-1560

TEST UNIT DRAWINGS
KAWNEER 1600 Wall System™1 - 7 13/16"
ASTM E1886/1996 - ZONE 4, LEVEL E
TAS 201 / 202 / 203

SCALE: 1/64" = 1'-0"

DRAWN BY	DATE
WJM	05/11/2018

DRWG. NO. T162963

SHEET 02 OF 10

TAS 202 TEST SCHEDULE

TEST	PROCEDURE	LOAD	PASS/FAIL CRITERIA
Air	ASTM E 283/TAS 202/NFRC 400	1.57/6.24 PSF	Maximum 0.06 CFM/FT^2
Structural	ASTM E 330/TAS 202	.5 X Positive Design Pressure = +35 PSF (30 SEC.)	
Structural	ASTM E 330/TAS 202	Positive Design Pressure = +70 PSF (30 SEC.)	No Glass Breakage or Permanent Damage. Maximum Deflection = L/180
Structural	ASTM E 330/TAS 202	.5 X Negative Design Pressure = -35 PSF (30 SEC.)	
Structural	ASTM E 330/TAS 202	Negative Design Pressure = -70 PSF (30 SEC.)	No Glass Breakage or Permanent Damage. Maximum Deflection = L/180
Water	ASTM E 331/TAS 202	Minimum 20 PSF	No Water Infiltration Per TAS 202 Section 5.2.6 or ASTM E 331
Structural	ASTM E 330/TAS 202	Positive Full Test Load = +105 PSF (30 SEC.)	No Glass Breakage or Permanent Damage Maximum Alloable Permanent Deformation 0.4% of Clear Span
Structural	ASTM E 330/TAS 202	Negative Full Test Load = -105 PSF (30 SEC.)	

TAS 201 / 203 AND ASTM E 1886/1996 TEST SCHEDULE

TEST	PROCEDURE	LOAD	PASS/FAIL CRITERIA
LMI, LEVEL E	ASTM E 1886/1996 / TAS 201	Large Missile (9lb. 2x4) at 80 fps	No Penetration
Cycle	ASTM E 1886/1996 / TAS 203	Positive Range for 4500 Cycles Up To Design Pressure	No opening > 5" x 1/16" that air can pass through
Cycle	ASTM E 1886/1996 / TAS 203	Negative Range for 4500 Cycles Up To Design Pressure	

■ = LOCATION OF LARGE MISSILE IMPACTS

◉ = LOCATION OF DIAL INDICATORS FOR NET DEFLECTIONS AND PERMANENT SET

DESIGN PRESSURE = +/- 70 PSF

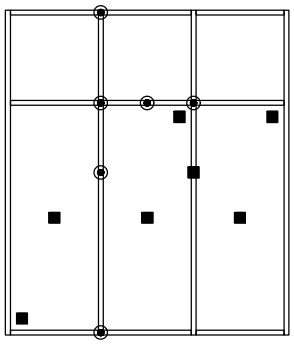

UNIT #1
AIR, WATER, STRUCTURAL & LMI
CYCLE

intertek
Total Quality. Assured.

Report #: I7021-550-18
Date: 12/14/18
Verified by:

REV.	DATE	DESCRIPTION	BY

EC: 95449-133 ESTABLISHED 12/07/18

CONFIDENTIAL AND PROPRIETARY INFORMATION KAWNEER COMPANY INC.

THESE DRAWINGS ARE THE SOLE AND EXCLUSIVE PROPERTY OF KAWNEER AND CONTAIN SENSITIVE, PRIVILEGED OR CONFIDENTIAL INFORMATION WHICH MAY BE USED ONLY FOR ITS BENEFIT. THE DISCLOSURE OF THESE DRAWINGS TO UNAUTHORIZED PERSONS IS STRICTLY PROHIBITED. THIS DOCUMENT AND ALL COPIES MUST BE RETURNED UPON DEMAND. © COPYRIGHT KAWNEER COMPANY, INC., 2018

THIS DRAWING IS FOR HURRICANE RESISTANT PRODUCT TESTING ONLY

KAWNEER
555 GUTHRIDGE COURT
NORCROSS, GEORGIA 30092
PHONE (770) 449-5555
FAX (770) 734-1560

TEST UNIT DRAWINGS
KAWNEER 1600 Wall System™1 - 7 13/16"
ASTM E1886/1996 - ZONE 4, LEVEL E
TAS 201 / 202 / 203

SCALE: 1/64" = 1'-0"

DRAWN BY: WJM
DATE: 05/11/2018
DRWG. NO.: T162963
SHEET: 03 OF 10

TAS 202 TEST SCHEDULE

TEST	PROCEDURE	LOAD	PASS/FAIL CRITERIA
Air	ASTM E 283/TAS 202/NFRC 400	1.57/6.24 PSF	Maximum 0.06 CFM/FT^2
Structural	ASTM E 330/TAS 202	.5 X Positive Design Pressure = +45 PSF (30 SEC.)	
Structural	ASTM E 330/TAS 202	Positive Design Pressure = +90 PSF (30 SEC.)	No Glass Breakage or Permanent Damage. Maximum Deflection = L/180
Structural	ASTM E 330/TAS 202	.5 X Negative Design Pressure = -45 PSF (30 SEC.)	
Structural	ASTM E 330/TAS 202	Negative Design Pressure = -90 PSF (30 SEC.)	No Glass Breakage or Permanent Damage. Maximum Deflection = L/180
Water	ASTM E 331/TAS 202	Minimum 20 PSF	No Water Infiltration Per TAS 202 Section 5.2.6 or ASTM E 331
Structural	ASTM E 330/TAS 202	Positive Full Test Load = +135 PSF (30 SEC.)	No Glass Breakage or Permanent Damage Maximum Alloable Permanent Deformation 0.4% of Clear Span
Structural	ASTM E 330/TAS 202	Negative Full Test Load = -135 PSF (30 SEC.)	

TAS 201 / 203 AND ASTM E 1886/1996 TEST SCHEDULE

TEST	PROCEDURE	LOAD	PASS/FAIL CRITERIA
LMI, LEVEL E	ASTM E 1886/1996 / TAS 201	Large Missile (9lb. 2x4) at 80 fps	No Penetration
Cycle	ASTM E 1886/1996 / TAS 203	Positive Range for 4500 Cycles Up To Design Pressure	No opening > 5" x 1/16" that air can pass through
Cycle	ASTM E 1886/1996 / TAS 203	Negative Range for 4500 Cycles Up To Design Pressure	

intertek Total Quality. Assured.
Report #: I7021-550-18
Date: 12/14/18
Verified by:

■ = LOCATION OF LARGE MISSILE IMPACTS

⊙ = LOCATION OF DIAL INDICATORS FOR NET DEFLECTIONS AND PERMANENT SET

DESIGN PRESSURE = +/- 90 PSF

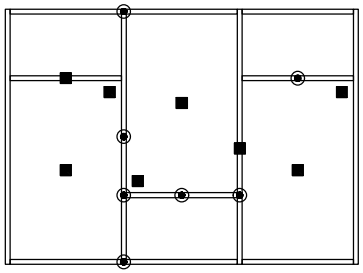

UNIT #2
STRUCTURAL & LMI
CYCLE

DESIGN PRESSURE = +/- 90 PSF

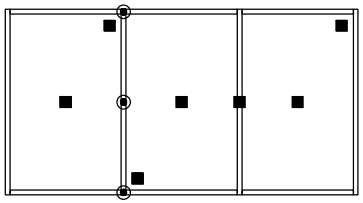

UNIT #3
STRUCTURAL & LMI
CYCLE

REV.	DATE	DESCRIPTION	BY

EC: 95449-133 ESTABLISHED 12/07/18

CONFIDENTIAL AND PROPRIETARY INFORMATION KAWNEER COMPANY INC.

THESE DRAWINGS ARE THE SOLE AND EXCLUSIVE PROPERTY OF KAWNEER AND CONTAIN SENSITIVE, PRIVILEGED OR CONFIDENTIAL INFORMATION WHICH MAY BE USED ONLY FOR ITS BENEFIT. THE DISCLOSURE OF THESE DRAWINGS TO UNAUTHORIZED PERSONS IS STRICTLY PROHIBITED. THIS DOCUMENT AND ALL COPIES MUST BE RETURNED UPON DEMAND. © COPYRIGHT KAWNEER COMPANY, INC., 2018

THIS DRAWING IS FOR HURRICANE RESISTANT PRODUCT TESTING ONLY

KAWNEER
555 GUTHRIDGE COURT
NORCROSS, GEORGIA 30092
PHONE (770) 449-5555
FAX (770) 734-1560

TEST UNIT DRAWINGS
KAWNEER 1600 Wall System™1 - 7 13/16"
ASTM E1886/1996 - ZONE 4, LEVEL E
TAS 201 / 202 / 203

SCALE: 1/64" = 1'-0"

DRAWN BY: WJM
DATE: 05/11/2018
DRWG. NO.: T162963
SHEET: 04 OF 10

BILL OF MATERIALS

NO.	PART NO.	DESCRIPTION	DIMENSIONS	MATERIAL
		EXTRUSIONS		
01	162006	COVER	2.500 x 0.504 x 0.060	6063 T6 ALUMINUM
02	162528	PERIMETER PRESSURE PLATE	2.500 x 2.097 x 0.100	6063 T6 ALUMINUM
03	162517	PRESSURE PLATE	2.500 x 0.847 x 0.100	6063 T6 ALUMINUM
04	162003	7 1/2" MULLION	2.500 x 6.500 x 0.100	6063 T6 ALUMINUM
05	162095	7 1/2" OPEN BACK HEAD/SILL	2.500 x 6.500 x 0.100	6063 T6 ALUMINUM
06	162020	OPEN BACK FILLER	0.434 x 4.973 x 0.090	6063 T6 ALUMINUM
07	162332	HEAD/SILL SHEAR BLOCK	4.395 x 2.895 x 0.125	6063 T6 ALUMINUM
08	162378	HORIZONTAL SHEAR BLOCK	4.395 x 2.895 x 0.125	6063 T6 ALUMINUM
09	162311	"F" ANCHOR	3.250 x 8.000 x 0.250	6063 T6 ALUMINUM
10	162312	"T" ANCHOR	3.250 x 8.500 x 0.250	6063 T6 ALUMINUM
11	162091	7 1/2" OPEN BACK HORIZONTAL	2.500 x 6.500 x 0.100	6063 T6 ALUMINUM
12	162317	7 1/2" OPEN BACK SHIM FILLER	0.434 x 4.973 x 0.090	6063 T6 ALUMINUM
13	162341	PLUG ANCHOR	2.250 x 4.750 x 0.250 x 3.000	6063 T6 ALUMINUM
14		PLUG ANCHOR STEEL ANGLE	6.000 x 4.000 x 0.313 x 4.250	GRADE 50 STEEL
		FASTENERS		
40	128406	PRESSURE PLATE ATTACHMENT SCREW	1/4 X 1" AB HWHTF	300 SERIES STAINLESS STEEL
41	128405	HORIZONTAL ATTACHMENT SCREW	#12 x 7/8" AB FHTF	300 SERIES STAINLESS STEEL
42	128394	SHEAR BLOCK ATTACHMENT SCREW	#12 x 1 7/8" B PHTF	430 SERIES STAINLESS STEEL
43	128236	PLUG ANCHOR ATTACHMENT BOLT	3/8-16 x 1 1/4" BOLT	300 SERIES STAINLESS STEEL
44	128396	"F" ANCHOR LOCATION SCREW	#12 x 7/16" B PHTF	430 SERIES STAINLESS STEEL
45	028779	PLUG ANCHOR LOCK WASHERS	3/8" LOCK WASHER	300 SERIES STAINLESS STEEL
46	028780	PLUG ANCHOR HEX BOLT	3/8-16 HEX NUT	300 SERIES STAINLESS STEEL
47		ANCHOR ATTACHMENT SCREW	5/16" x 2-1/2" ULTRACON ANCHOR	GRADE 5 STEEL
		GASKETS AND WEATHERING		
50	027857	FIXED PERIMETER GASKET	0.360 x 0.400	SHORE "A" 70±5 DUROMETER EPDM
51	027850	FIXED GASKET	0.615 x 0.630	SHORE "A" 60±5 DUROMETER EPDM
52	127192	FOAM TAPE	0.313 x 0.438	NORTON V2100 SERIES FOAM TAPE
53	162310	THERMAL BREAK	0.250 x 0.626	SHORE "A" 70±5 DUROMETER EPDM
54	171300	THERMAL SEPERATOR	1.280 x 0.626	6/6 POLYAMIDE
55	027081	SETTING BLOCK	4.125 x 1.250 x 0.188	SHORE "A" 85±5 DUROMETER EPDM
56		DOW CORNING 983/995 SILICONE	N/A	SILICONE SEALANT (SEE GLAZING SCHED)
		REINFORCING		
90	162301	HI-SPAN STEEL REINFORCING	1.750 x 4.560 x 0.164	GRADE 50 STEEL
91	162302	HI-SPAN STEEL REINFORCING	1.500 x 3.810 x 0.164	GRADE 50 STEEL
92	162303	HI-SPAN STEEL REINFORCING	1.250 x 3.388 x 0.164	GRADE 50 STEEL

GLAZING DETAILS

1600 Wall System™1
1 5/16" INFILL
WET GLAZED

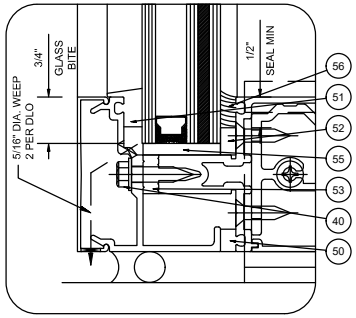

INFILL SIZE FORMULA
DLO + 1 1/2"
FOR LARGE MISSILE

intertek
Total Quality. Assured.

Report #:	I7021-550-18
Date:	12/14/18
Verified by:	

1600 Wall System™1
1 5/16" INFILL
WET GLAZED

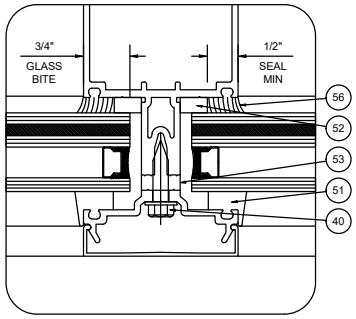

INFILL SIZE FORMULA
DLO + 1 1/2"
FOR LARGE MISSILE

REV.	DATE	DESCRIPTION	BY

EC: 95449-133 ESTABLISHED 12/07/18

CONFIDENTIAL AND PROPRIETARY INFORMATION KAWNEER COMPANY INC.

THESE DRAWINGS ARE THE SOLE AND EXCLUSIVE PROPERTY OF KAWNEER AND CONTAIN SENSITIVE, PRIVILEGED OR CONFIDENTIAL INFORMATION WHICH MAY BE USED ONLY FOR ITS BENEFIT. THE DISCLOSURE OF THESE DRAWINGS TO UNAUTHORIZED PERSONS IS STRICTLY PROHIBITED. THIS DOCUMENT AND ALL COPIES MUST BE RETURNED UPON DEMAND.© COPYRIGHT KAWNEER COMPANY, INC., 2018

THIS DRAWING IS FOR HURRICANE RESISTANT PRODUCT TESTING ONLY

KAWNEER
555 GUTHRIDGE COURT
NORCROSS, GEORGIA 30092
PHONE (770) 449-5555
FAX (770) 734-1560

TEST UNIT DRAWINGS
KAWNEER 1600 Wall System™1 - 7 13/16"
ASTM E1886/1996 - ZONE 4, LEVEL E
TAS 201 / 202 / 203

SCALE: HALF

DRAWN BY: WJM
DATE: 05/11/2018
DRWG. NO.: T162963
SHEET: 05 OF 10

intertek Total Quality. Assured.	
Report #:	I7021-550-18
Date:	12/14/18
Verified by:	

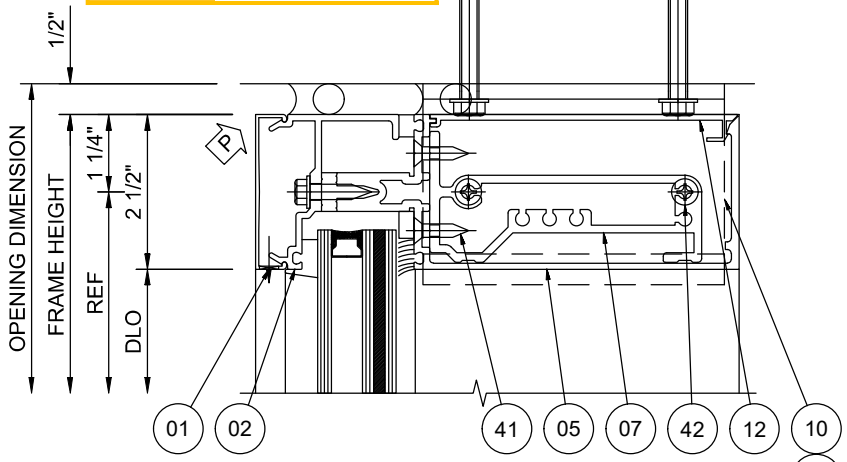

01
HEAD
1600 Wall System™1

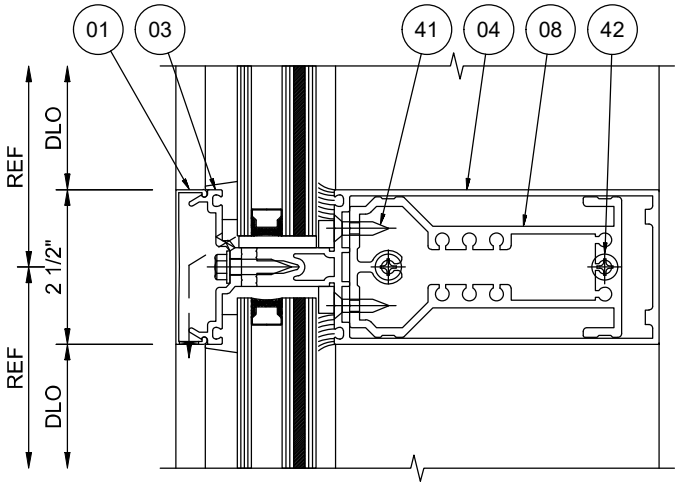

03
HORIZONTAL
1600 Wall System™1

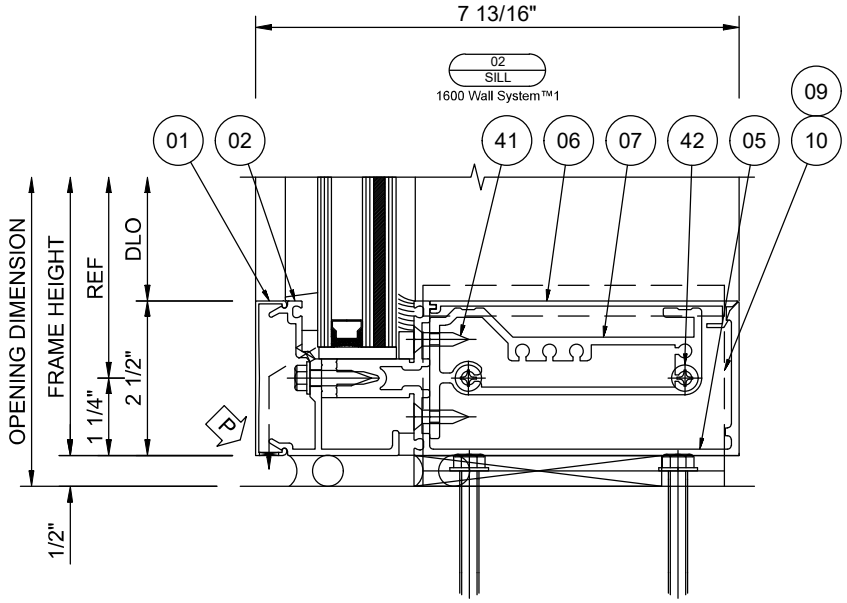

02
SILL
1600 Wall System™1

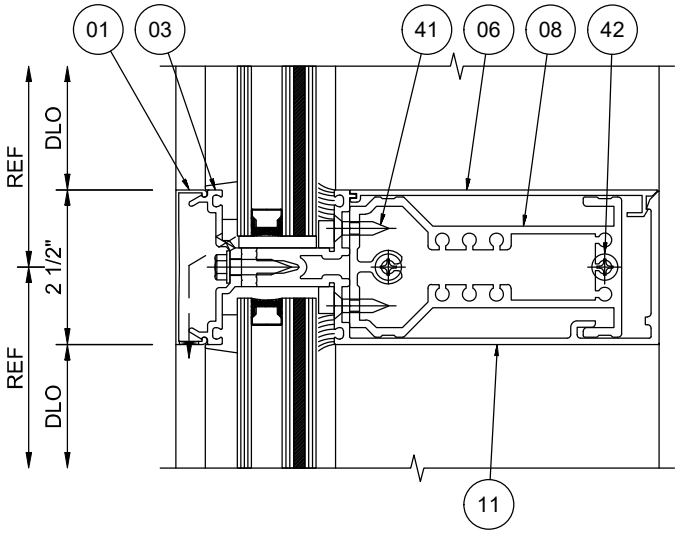

04
OB HORIZ
1600 Wall System™1

REV.	DATE	DESCRIPTION	BY

EC: 95449-133 ESTABLISHED 12/07/18

CONFIDENTIAL AND PROPRIETARY INFORMATION KAWNEER COMPANY INC.

THESE DRAWINGS ARE THE SOLE AND EXCLUSIVE PROPERTY OF KAWNEER AND CONTAIN SENSITIVE, PRIVILEGED OR CONFIDENTIAL INFORMATION WHICH MAY BE USED ONLY FOR ITS BENEFIT. THE DISCLOSURE OF THESE DRAWINGS TO UNAUTHORIZED PERSONS IS STRICTLY PROHIBITED. THIS DOCUMENT AND ALL COPIES MUST BE RETURNED UPON DEMAND.© COPYRIGHT KAWNEER COMPANY, INC., 2018

THIS DRAWING IS FOR HURRICANE RESISTANT PRODUCT TESTING ONLY

KAWNEER
555 GUTHRIDGE COURT
NORCROSS, GEORGIA 30092
PHONE (770) 449-5555
FAX (770) 734-1560

TEST UNIT DRAWINGS
KAWNEER 1600 Wall System™1 - 7 13/16"
ASTM E1886/1996 - ZONE 4, LEVEL E
TAS 201 / 202 / 203

SCALE: HALF

DRAWN BY	DATE
WJM	05/11/2018

DRWG. NO.
T162963

SHEET
06 OF 10

Report #:	I7021-550-18
Date:	12/14/18
Verified by:	

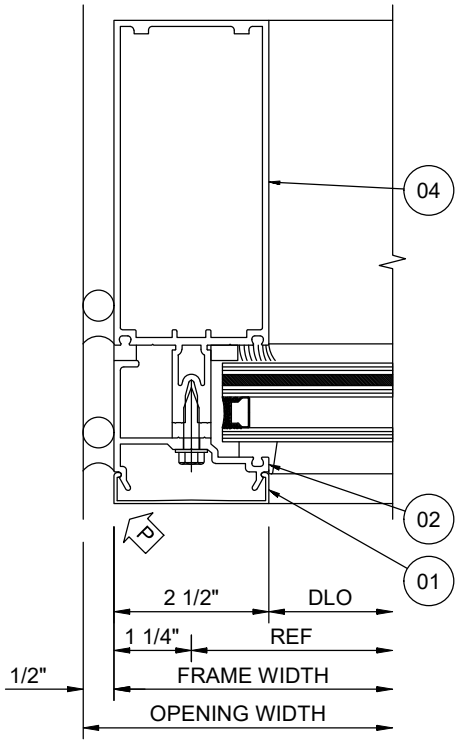

05
JAMB
1600 Wall System™1

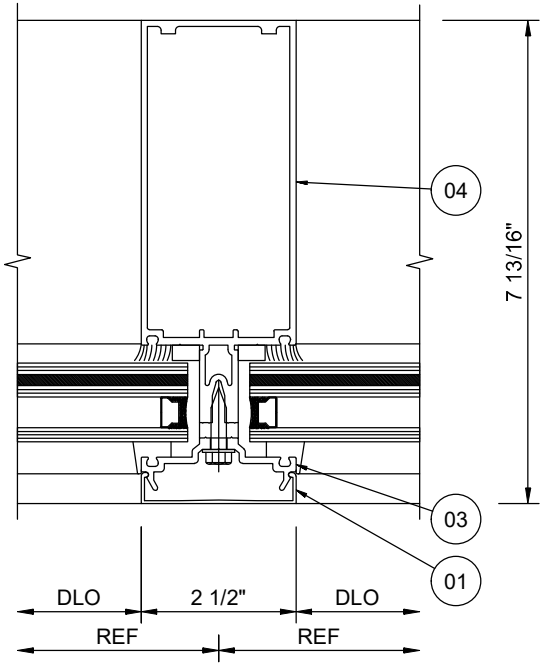

06
MULLION
1600 Wall System™1

REV.	DATE	DESCRIPTION	BY

EC: 95449-133 ESTABLISHED 12/07/18

CONFIDENTIAL AND PROPRIETARY INFORMATION KAWNEER COMPANY INC.

THESE DRAWINGS ARE THE SOLE AND EXCLUSIVE PROPERTY OF KAWNEER AND CONTAIN SENSITIVE, PRIVILEGED OR CONFIDENTIAL INFORMATION WHICH MAY BE USED ONLY FOR ITS BENEFIT. THE DISCLOSURE OF THESE DRAWINGS TO UNAUTHORIZED PERSONS IS STRICTLY PROHIBITED. THIS DOCUMENT AND ALL COPIES MUST BE RETURNED UPON DEMAND.© COPYRIGHT KAWNEER COMPANY, INC., 2018

THIS DRAWING IS FOR HURRICANE RESISTANT PRODUCT TESTING ONLY

KAWNEER
555 GUTHRIDGE COURT
NORCROSS, GEORGIA 30092
PHONE (770) 449-5555
FAX (770) 734-1560

TEST UNIT DRAWINGS
KAWNEER 1600 Wall System™1 - 7 13/16"
ASTM E1886/1996 - ZONE 4, LEVEL E
TAS 201 / 202 / 203

SCALE: HALF

DRAWN BY: WJM
DATE: 05/11/2018
DRWG. NO.: T162963
SHEET: 07 OF 10

intertek
Total Quality. Assured.

Report #:	I7021-550-18
Date:	12/14/18
Verified by:	

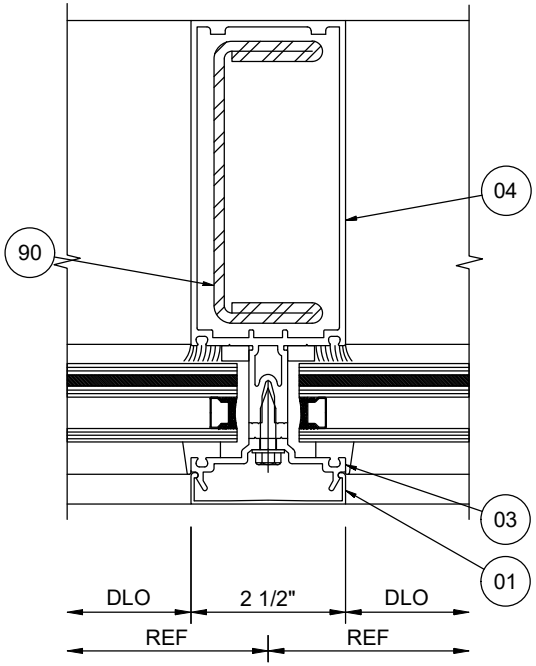

07
MULLION
1600 Wall System™1

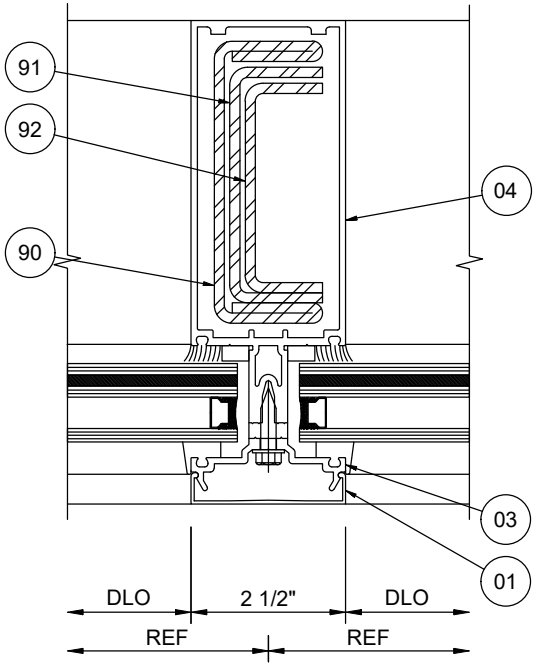

08
MULLION
1600 Wall System™1

REV.	DATE	DESCRIPTION	BY

EC: 95449-133 ESTABLISHED 12/07/18

CONFIDENTIAL AND PROPRIETARY INFORMATION KAWNEER COMPANY INC.

THESE DRAWINGS ARE THE SOLE AND EXCLUSIVE PROPERTY OF KAWNEER AND CONTAIN SENSITIVE, PRIVILEGED OR CONFIDENTIAL INFORMATION WHICH MAY BE USED ONLY FOR ITS BENEFIT. THE DISCLOSURE OF THESE DRAWINGS TO UNAUTHORIZED PERSONS IS STRICTLY PROHIBITED. THIS DOCUMENT AND ALL COPIES MUST BE RETURNED UPON DEMAND.© COPYRIGHT KAWNEER COMPANY, INC., 2018

THIS DRAWING IS FOR HURRICANE RESISTANT PRODUCT TESTING ONLY

KAWNEER

555 GUTHRIDGE COURT
NORCROSS, GEORGIA 30092
PHONE (770) 449-5555
FAX (770) 734-1560

TEST UNIT DRAWINGS
KAWNEER 1600 Wall System™1 - 7 13/16"
ASTM E1886/1996 - ZONE 4, LEVEL E
TAS 201 / 202 / 203

SCALE: HALF

DRAWN BY: WJM
DATE: 05/11/2018
DRWG. NO.: T162963
SHEET: 08 OF 10

intertek
Total Quality. Assured.

Report #:	I7021-550-18
Date:	12/14/18
Verified by:	

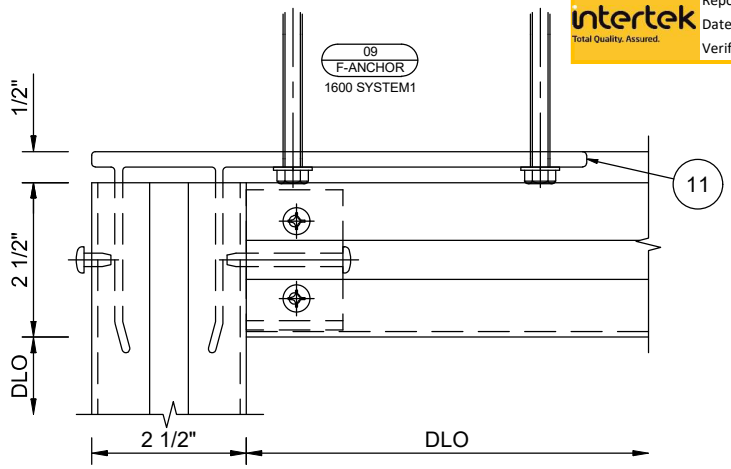

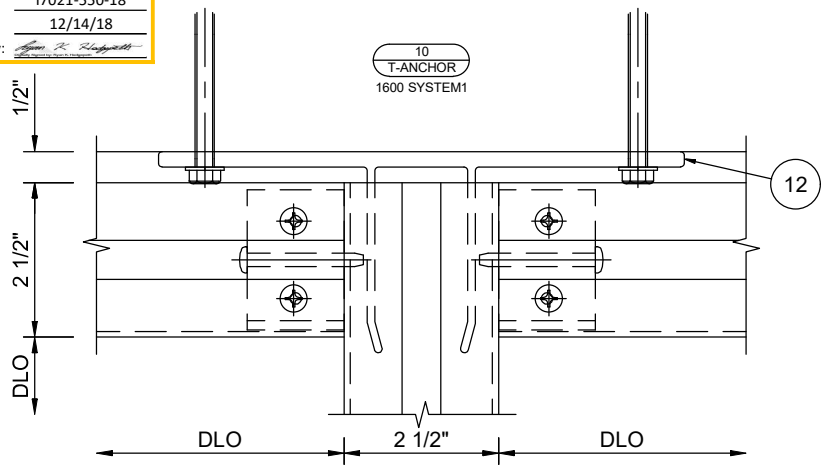

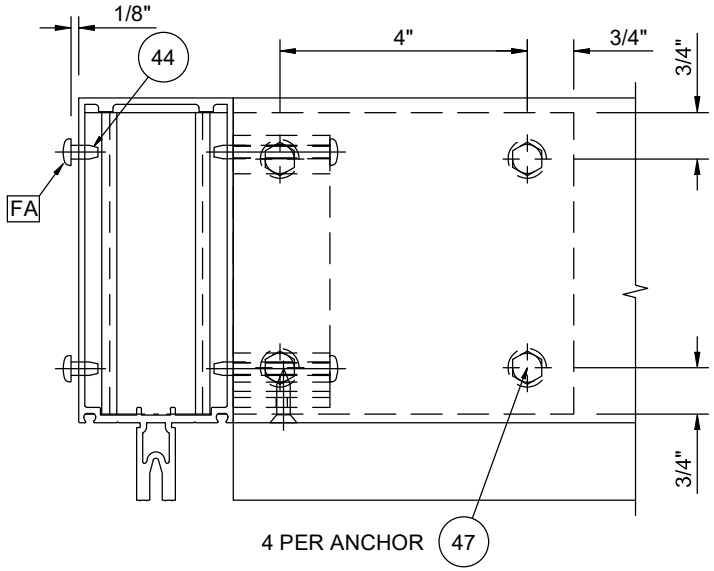

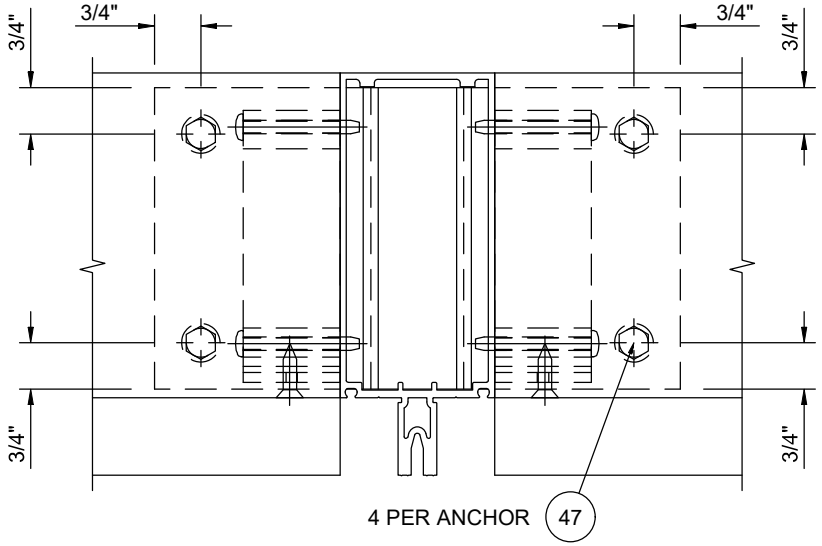

PERIMETER FASTENER NOTE:
5/16" ULTRACON WOOD ANCHORS, 2 1/2" LONG,
2" MINIMUM EMBEDMENT, 3" MINIMUM EDGE DISTANCE.

REV.	DATE	DESCRIPTION	BY

EC: 95449-133 ESTABLISHED 12/07/18

CONFIDENTIAL AND PROPRIETARY INFORMATION KAWNEER COMPANY INC.

THESE DRAWINGS ARE THE SOLE AND EXCLUSIVE PROPERTY OF KAWNEER AND CONTAIN SENSITIVE, PRIVILEGED OR CONFIDENTIAL INFORMATION WHICH MAY BE USED ONLY FOR ITS BENEFIT. THE DISCLOSURE OF THESE DRAWINGS TO UNAUTHORIZED PERSONS IS STRICTLY PROHIBITED. THIS DOCUMENT AND ALL COPIES MUST BE RETURNED UPON DEMAND.© COPYRIGHT KAWNEER COMPANY, INC., 2018

THIS DRAWING IS FOR HURRICANE RESISTANT PRODUCT TESTING ONLY

KAWNEER
555 GUTHRIDGE COURT
NORCROSS, GEORGIA 30092
PHONE (770) 449-5555
FAX (770) 734-1560

TEST UNIT DRAWINGS
KAWNEER 1600 Wall System™1 - 7 13/16"
ASTM E1886/1996 - ZONE 4, LEVEL E
TAS 201 / 202 / 203

SCALE: HALF

DRAWN BY: WJM
DATE: 05/11/2018
DRWG. NO.: T162963
SHEET: 09 OF 10

intertek Total Quality. Assured.	
Report #:	I7021-550-18
Date:	12/14/18
Verified by:	

PERIMETER FASTENER NOTE:
5/16" ULTRACON WOOD ANCHORS, 2 1/2" LONG,
2" MINIMUM EMBEDMENT, 3" MINIMUM EDGE DISTANCE.

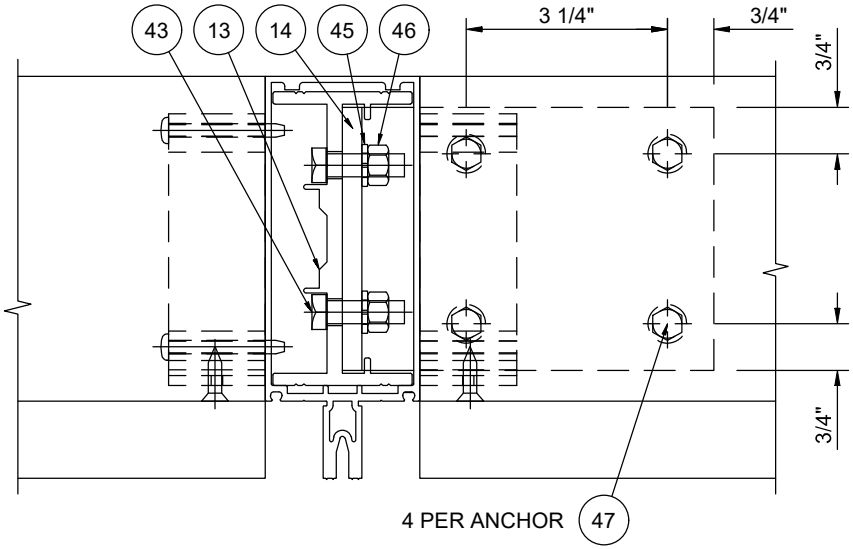

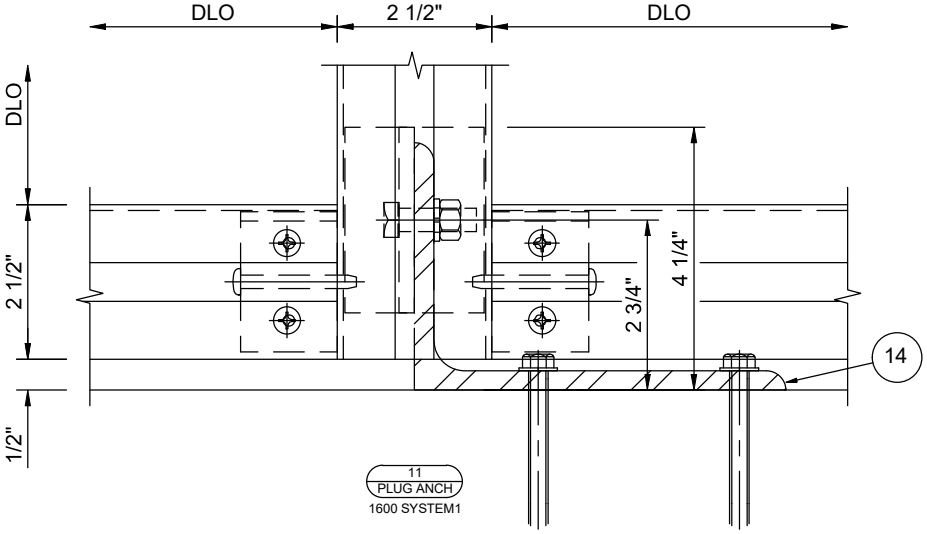

REV.	DATE	DESCRIPTION	BY

EC: 95449-133 ESTABLISHED 12/07/18

CONFIDENTIAL AND PROPRIETARY INFORMATION KAWNEER COMPANY INC.

THESE DRAWINGS ARE THE SOLE AND EXCLUSIVE PROPERTY OF KAWNEER AND CONTAIN SENSITIVE, PRIVILEGED OR CONFIDENTIAL INFORMATION WHICH MAY BE USED ONLY FOR ITS BENEFIT. THE DISCLOSURE OF THESE DRAWINGS TO UNAUTHORIZED PERSONS IS STRICTLY PROHIBITED. THIS DOCUMENT AND ALL COPIES MUST BE RETURNED UPON DEMAND.© COPYRIGHT KAWNEER COMPANY, INC., 2018

THIS DRAWING IS FOR HURRICANE RESISTANT PRODUCT TESTING ONLY

KAWNEER
555 GUTHRIDGE COURT
NORCROSS, GEORGIA 30092
PHONE (770) 449-5555
FAX (770) 734-1560

TEST UNIT DRAWINGS
KAWNEER 1600 Wall System™1 - 7 13/16"
ASTM E1886/1996 - ZONE 4, LEVEL E
TAS 201 / 202 / 203

SCALE: HALF

DRAWN BY: WJM
DATE: 05/11/2018
DRWG. NO.: T162963
SHEET: 10 OF 10